ABB MACHINERY DRIVES

ACS380 drives

Hardware manual

ACS380 drives

Hardware manual

Table of contents

1. Safety instructions

4. Mechanical installation

6. Electrical installation – IEC

7. Electrical installation – North America

3AXD50000029274 Rev E
EN
Original instructions
EFFECTIVE: 2021-06-30

Table of contents

1 Safety instructions

Contents of this chapter 15
Use of warnings and notes 15
General safety in installation, start-up and maintenance 16
Electrical safety in installation, start-up and maintenance 17
Electrical safety precautions 17
Additional instructions and notes 18
Printed circuit boards 19
Grounding 19
General safety in operation 20
Additional instructions for permanent magnet motor drives 21
Safety in installation, start-up, maintenance 21
Safety in operation 21

2 Introduction to the manual

Contents of this chapter 23
Applicability 23
Target audience 23
Categorization by frame size 23
Quick installation and commissioning flowchart 24
Terms and abbreviations 25
Related manuals 26

3 Operation principle and hardware description

Contents of this chapter 29
Operation principle 29
Simplified main circuit diagram 30
Product variants 30
Layout 31
Control connections 31
Standard variant (I/O and Modbus) (ACS380-04xS) 32
Configured variant (ACS380-04xC) 33
Base variant (ACS380-04xN) 34
Option modules 34
Control panel options 35
UL Type 1 kits 36
Drive labels 36
Model information label 36

Type designation label 37
Type designation key 37
Basic code 37
Option codes 38
Control panel 39
Home view 41
Status icons 41
Message view 42
Options view 42
Menu 42

4 Mechanical installation

Contents of this chapter 43
Installation alternatives 43
Examining the installation site 44
Required tools 44
Unpacking the delivery 45
Installing the drive 45
To install the drive with screws 45
To install the drive to a DIN installation rail 46

5 Guidelines for planning the electrical installation

Contents of this chapter 49
Limitation of liability 49
Selecting the main supply disconnecting device 49
European Union and United Kingdom 50
North America 50
Other regions 50
Selecting the main contactor 50
North America 50
Other regions 50
Checking the compatibility of the motor and drive 51
Selecting the power cables 51
General guidelines 51
Typical power cable sizes 52
Power cable types 52
Preferred power cable types 52
Alternate power cable types 53
Not allowed power cable types 54
Additional guidelines, North America 55
Metal conduit 55
Power cable shield 56
Selecting the control cables 56
Shielding 56

Signals in separate cables 57
Signals that can be run in the same cable 57
Relay cable 57
Control panel to drive cable 57
PC tool cable 57
Routing the cables 57
General guidelines – IEC 57
General guidelines – North America 58
Continuous motor cable shield/conduit or enclosure for equipment on the motor cable 59
Separate control cable ducts 60
Implementing short-circuit and thermal overload protection 60
Protecting the drive and input power cable in short-circuits 60
Protecting the motor and motor cable in short-circuits 60
Protecting the drive, and the input power and motor cables against thermal overload 60
Protecting the motor against thermal overload 61
Protecting the motor against overload without thermal model or temperature sensors 61
Implementing a motor temperature sensor connection 61
Protecting the drive against ground faults 62
Residual current device compatibility 62
Implementing the Emergency stop function 62
Implementing the Safe torque off function 63
Using a safety switch between the drive and the motor 63
Implementing the control of a contactor between drive and motor 63
Protecting the contacts of relay outputs 63

6 *Electrical installation – IEC*

Contents of this chapter 65
Warnings 65
Required tools 65
Measuring the insulation resistance 66
Measuring the insulation resistance of the drive 66
Measuring the insulation resistance of the input power cable 66
Measuring the insulation resistance of the motor and motor cable 66
Measuring the insulation resistance of the brake resistor circuit 67
Grounding system compatibility check – IEC 67
EMC filter 67
Ground-to-phase varistor 68
Compatibility of EMC filter and ground-to-phase varistor with the grounding system 68
Disconnecting the EMC filter or ground-to-phase varistor 70
EMC/VAR screw location 70
Guidelines for installing the drive to a TT system 70

Identifying the grounding system of the electrical power network 70
Connecting the power cables – IEC (shielded cables) 72
Connection diagram 72
Connection procedure 73
Connecting the control cables 74
Default I/O connection diagram (ABB standard macro) 74
Fieldbus connection diagram 76
Control cable connection procedure 77
Additional information on the control connections 78
Embedded EIA-485 fieldbus connection 78
PNP configuration for digital inputs 80
NPN configuration for digital inputs 81
Connection examples of two-wire and three-wire sensors 81
AI and AO (or AI, DI and +10 V) as PTC motor temperature sensor interface 82
AI1 and AI2 as Pt100, Pt1000, Ni1000, KTY83 and KTY84 sensor inputs 84
Safe torque off 84
Auxiliary voltage connection 85
Connecting a PC 86
Installing options 86
Installing a front option 86
Installing a side option 88

7 *Electrical installation – North America*

Contents of this chapter 89
Warnings 89
Required tools 89
Measuring the insulation resistance 90
Measuring the insulation resistance of the drive 90
Measuring the insulation resistance of the input power cable 90
Measuring the insulation resistance of the motor and motor cable 90
Measuring the insulation resistance of the brake resistor circuit 91
Grounding system compatibility check – North America 91
EMC filter 92
Ground-to-phase varistor 92
Compatibility of EMC filter and ground-to-phase varistor with the grounding system 92
Disconnecting the ground-to-phase varistor, or connecting the EMC filter ... 94
EMC/VAR screw location 94
Guidelines for installing the drive to a TT system 94
Identifying the grounding system of the electrical power network 95
Connecting the power cables – North America (wiring in conduits) 96
Connection diagram 96
Connection procedure 97

Connecting the control cables 99
Default I/O connection diagram (ABB standard macro) 99
Fieldbus connection diagram 101
Control cable connection procedure 102
Additional information on the control connections 103
Embedded EIA-485 fieldbus connection 103
PNP configuration for digital inputs 105
NPN configuration for digital inputs 106
Connection examples of two-wire and three-wire sensors 106
AI and AO (or AI, DI and +10 V) as PTC motor temperature sensor interface 107
AI1 and AI2 as Pt100, Pt1000, Ni1000, KTY83 and KTY84 sensor inputs 109
Safe torque off 109
Auxiliary voltage connection 110
Connecting a PC 111
Installing options 111
Installing a front option 111
Installing a side option 113

8 Installation checklist

Contents of this chapter 115
Checklist 115

9 Maintenance

Contents of this chapter 119
Maintenance intervals 119
Description of symbols 119
Recommended maintenance intervals after start-up 119
Functional safety components 120
Cleaning the heatsink 121
Replacing the cooling fans 121
Replacing the cooling fan, frames R1…R3 122
Replacing the cooling fan, frame R4 124
Capacitors 125
Reforming the capacitors 125

10 Technical data

Contents of this chapter 127
Electrical ratings 127
IEC ratings 127
UL (NEC) ratings 129
Definitions 130

Sizing 131
Output derating 131
Surrounding air temperature derating 133
Altitude derating 133
Switching frequency derating 134
Fuses 135
IEC fuses 135
gG fuses 135
gR fuses 137
UL (NEC) fuses 138
Alternative short-circuit protection 140
Miniature circuit breakers (IEC) 140
Manual self-protected combination motor controller – Type E USA (UL (NEC)) 141
Dimensions and weights 143
Free space requirements 145
Losses, cooling data and noise 145
Typical power cable sizes 146
Terminal data for the power cables 147
Terminal data for the control cables 150
External EMC filters 150
Electrical power network specification 151
Motor connection data 152
Motor cable length 152
Operational functionality and motor cable length 152
EMC compatibility and motor cable length 153
Control connection data 154
Brake resistor connection data 155
Energy efficiency data (EU ecodesign) 155
Protection classes 155
Ambient conditions 155
Materials 157
Materials 157
Disposal 157
Applicable standards 158
Markings 158
EMC compliance (IEC/EN 61800-3:2004 + A1:2012) 159
Definitions 159
Category C1 160
Category C2 160
Category C3 161
Category C4 161
UL checklist 163
Disclaimers 164
Generic disclaimer 164

Cybersecurity disclaimer 164

11 Dimension drawings

Contents of this chapter 165
Frame R0 (1-phase 230 V) 166
Frame R0 (400/480 V) 167
Frame R1 (230 V) 168
Frame R1 (3-phase 230 V and 3-phase 400/480 V) 169
Frame R2 (230 V) 170
Frame R2 (400/480 V) 171
Frame R3 (400/480 V) 172
Frame R4 (400/480 V) 173

12 Resistor braking

Contents of this chapter 175
Safety 175
Operation principle 175
Selecting the brake resistor 175
Reference brake resistors 177
Definitions 178
Selecting and routing the brake resistor cables 178
Minimizing electromagnetic interference 178
Maximum cable length 179
Placing the brake resistors 179
Protecting the system in brake circuit fault situations 179
Protecting the system in cable and brake resistor short-circuit situations 179
Protecting the system against thermal overload 179
Mechanical and electrical installation of brake resistor 180
Mechanical installation 181
Electrical installation 181
Measuring the insulation 181
Connecting power cables 181
Connection the control cables 181
Start-up 181

13 The Safe torque off function

Contents of this chapter 183
Description 183
Compliance with the European Machinery Directive 184
Wiring 185
Connection principle 185
Single ACS380 drive, internal power supply 185
Single ACS380 drive, external power supply 186

Single-channel connection of activation switch 187
Wiring examples 188
Single ACS380 drive, internal power supply 188
Single ACS380 drive, external power supply 188
Multiple ACS380 drives, internal power supply 189
Multiple ACS380 drives, external power supply 190
Activation switch 190
Cable types and lengths 191
Grounding of protective shields 191
Operation principle 192
Start-up including validation test 193
Competence 193
Validation test reports 193
Validation test procedure 193
Use 195
Maintenance 197
Competence 197
Fault tracing 198
Safety data 199
Terms and abbreviations 200
TÜV certificate 201
Declarations of conformity 202

14 BTAC-02 pulse encoder interface module

Contents of this chapter 205
Safety instructions 205
Hardware description 205
Product overview 205
Layout 206
Mechanical installation 206
Electrical installation 206
Wiring – General 206
Terminal designations 207
Wiring – Encoder power supply interface 208
Wiring – Encoder 209
Phasing 209
Encoder output types 210
Wiring diagrams – Push-pull type encoder output 211
Differential connection 211
Single-ended connection 212
Wiring diagrams – Open collector (sinking) encoder output 213
Wiring diagrams – Open emitter (sourcing) encoder output 214
Apply power 215
Start-up 215
Feedback selection 215

Encoder adapter settings 216
Encoder configuration 217
Diagnostics 217
Technical data 218
Encoder interface 218
Encoder type 218
Encoder interface connectors 218
Cable 218
Encoder and BTAC module power supply 218
Back-up power supply for the drive 218
Internal connectors 218
Dimensions 219

15 BREL-01 relay output extension module

Contents of this chapter 221
Safety instructions 221
Hardware description 221
Product overview 221
Layout 222
Mechanical installation 222
Electrical installation 222
Start-up 223
Configuration parameters 223
Technical data 225

16 BAPO-01 auxiliary power extension module

Contents of this chapter 227
Safety instructions 227
Hardware description 227
Layout 228
Mechanical installation 229
Electrical installation 229
Start-up 229
Technical data 230

17 BIO-01 I/O extension module

Contents of this chapter 231
Safety instructions 231
Hardware description 231
Product overview 231
Layout 232
Mechanical installation 232
Terminal configuration 232

Electrical installation 233
Start-up 233
Technical data 233

Further information

1

Safety instructions

Contents of this chapter

This chapter contains the safety instructions which you must obey when you install, start up, operate and do maintenance work on the drive. If you ignore the safety instructions, injury, death or damage can occur.

Use of warnings and notes

Warnings tell you about conditions which can cause injury or death, or damage to the equipment. They also tell you how to prevent the danger. Notes draw attention to a particular condition or fact, or give information on a subject.

The manual uses these warning symbols:

WARNING!
Electricity warning tells about hazards from electricity which can cause injury or death, or damage to the equipment.

WARNING!
General warning tells about conditions, other than those caused by electricity, which can cause injury or death, or damage to the equipment.

WARNING!
Electrostatic sensitive devices warning tells you about the risk of electrostatic discharge which can cause damage to the equipment.

General safety in installation, start-up and maintenance

These instructions are for all personnel who do work on the drive.

WARNING!
Obey these instructions. If you ignore them, injury or death, or damage to the equipment can occur.

- Keep the drive in its package until you install it. After unpacking, protect the drive from dust, debris and moisture.
- Use the required personal protective equipment: safety shoes with metal toe cap, safety glasses, protective gloves and long sleeves, etc. Some parts have sharp edges.
- Beware of hot surfaces. Some parts, such as heatsinks of power semiconductors, and brake resistors, remain hot for a while after disconnection of the electrical supply.
- Vacuum clean the area around the drive before the start-up to prevent the drive cooling fan from drawing the dust inside the drive.
- Make sure that debris from drilling, cutting and grinding does not enter the drive during the installation. Electrically conductive debris inside the drive may cause damage or malfunction.
- Make sure that there is sufficient cooling. See the technical data.
- Before you connect voltage to the drive, make sure that all covers are in place. Do not remove the covers when voltage is connected.
- Before you adjust the drive operation limits, make sure that the motor and all driven equipment can operate throughout the set operation limits.
- Before you activate the automatic fault reset or automatic restart functions of the drive control program, make sure that no dangerous situations can occur. These functions reset the drive automatically and continue operation after a fault or supply break. If these functions are activated, the installation must be clearly marked as defined in IEC/EN 61800-5-1, subclause 6.5.3, for example, "THIS MACHINE STARTS AUTOMATICALLY".
- The maximum drive power cycles is five times in ten minutes. Power cycling the drive too often can damage the charging circuit of the DC capacitors.
- If you have connected safety circuits to the drive (for example, Safe torque off or emergency stop), validate them at start-up. See separate instructions for the safety circuits.
- Beware of hot air exiting from the air outlets.
- Do not cover the air inlet or outlet when the drive is running.

Note:

- If you select an external source for the start command and it is on, the drive will start immediately after fault reset unless you configure the drive for pulse start. See the firmware manual.
- If the drive is in remote control mode, you cannot stop or start the drive with the control panel.
- Only authorized persons are allowed to repair a malfunctioning drive.

Electrical safety in installation, start-up and maintenance

Electrical safety precautions

These electrical safety precautions are for all personnel who do work on the drive, motor cable or motor.

WARNING!
Obey these instructions. If you ignore them, injury or death, or damage to the equipment can occur.

If you are not a qualified electrical professional, do not do installation or maintenance work.

Go through these steps before you begin any installation or maintenance work.

1. Clearly identify the work location and equipment.
2. Disconnect all possible voltage sources. Make sure that re-connection is not possible. Lock out and tag out.
   - Open the main disconnecting device of the drive.
   - If you have a permanent magnet motor connected to the drive, disconnect the motor from the drive with a safety switch or by other means.
   - Disconnect all dangerous external voltages from the control circuits.
   - After you disconnect power from the drive, always wait 5 minutes to let the intermediate circuit capacitors discharge before you continue.
3. Protect any other energized parts in the work location against contact.
4. Take special precautions when close to bare conductors.
5. Measure that the installation is de-energized. Use a quality voltage tester.
   - Before and after measuring the installation, verify the operation of the voltage tester on a known voltage source.
   - Make sure that the voltage between the drive input power terminals (L1, L2, L3) and the grounding (PE) busbar is zero.

- Make sure that the voltage between the drive output terminals (T1/U, T2/V, T3/W) and the grounding (PE) busbar is zero.
- Make sure that the voltage between the drive DC terminals (UDC+ and UDC-) and the grounding (PE) terminal is zero.

  Note: If cables are not connected to the drive DC terminals, measuring the voltage from the DC terminal screws can give incorrect results.

6. Install temporary grounding as required by the local regulations.
7. Ask for a permit to work from the person in control of the electrical installation work.

Additional instructions and notes

WARNING!
Obey these instructions. If you ignore them, injury or death, or damage to the equipment can occur.

If you are not a qualified electrical professional, do not do installation or maintenance work.

- Make sure that the electrical power network, motor/generator, and environmental conditions agree with the drive data.
- Do not do insulation or voltage withstand tests on the drive.
- If you have a cardiac pacemaker or other electronic medical device, keep away from the area near motor, drive, and the drive power cabling when the drive is in operation. There are electromagnetic fields present which can interfere with the function of such devices. This can cause a health hazard.

Note:

- When the drive is connected to the input power, the motor cable terminals and the DC bus are at a dangerous voltage.

  The brake circuit, including the brake chopper and brake resistor (if installed) are also at a dangerous voltage.

  After disconnecting the drive from the input power, these remain at a dangerous voltage until the intermediate circuit capacitors have discharged.
- External wiring can supply dangerous voltages to the relay outputs of the control units of the drive.
- The Safe torque off function does not remove the voltage from the main and auxiliary circuits. The function is not effective against deliberate sabotage or misuse.

Printed circuit boards

WARNING!
Use a grounding wristband when you handle printed circuit boards. Do not touch the boards unnecessarily. The boards contain components sensitive to electrostatic discharge.

Grounding

These instructions are for all personnel who are responsible for the grounding of the drive.

WARNING!
Obey these instructions. If you ignore them, injury or death, or equipment malfunction can occur, and electromagnetic interference can increase.

If you are not a qualified electrical professional, do not do grounding work.

- Always ground the drive, the motor and adjoining equipment. This is necessary for the personnel safety. Proper grounding also reduces electromagnetic emission and interference.
- Make sure that the conductivity of the protective earth (PE) conductors is sufficient. See the electrical planning instructions of the drive. Obey the local regulations.
- Connect the power cable shields to protective earth (PE) terminals of the drive to make sure of personnel safety.
- Make a 360° grounding of the power and control cable shields at the cable entries to suppress electromagnetic disturbances.
- In a multiple-drive installation, connect each drive separately to the protective earth (PE) busbar of the power supply.

Note:

- You can use power cable shields as grounding conductors only when their conductivity is sufficient.
- As the normal touch current of the drive is higher than 3.5 mA AC or 10 mA DC, you must use a fixed protective earth (PE) connection. The minimum size of the protective earth conductor must comply with the local safety regulations for high protective earth conductor current equipment. See standard IEC/EN 61800-5-1 and the electrical planning instructions of the drive.
  To comply with standard IEC/EN 61800-5-1:
  - use a protective earth conductor with a minimum cross-sectional area of 10 mm^2 Cu or 16 mm^2 Al (as an alternative when aluminum cables are permitted),
    or

- use a second protective earth conductor of the same cross-sectional area as the original protective earth conductor,
  or
- use a device that automatically disconnects the supply if the protective earth conductor is damaged.

If the protective earth conductor is separate (that is, it does not form part of the input power cable or the input power cable enclosure), the minimum cross-sectional area must be:

- 2.5 mm^2 when the conductor is mechanically protected,
  or
- 4 mm^2 when the conductor is not mechanically protected.

General safety in operation

These instructions are for all personnel that operate the drive.

WARNING!
Obey these instructions. If you ignore them, injury or death, or damage to the equipment can occur.

- If you have a cardiac pacemaker or other electronic medical device, keep away from the area near motor, drive, and the drive power cabling when the drive is in operation. There are electromagnetic fields present which can interfere with the function of such devices. This can cause a health hazard.
- Give a stop command to the drive before you reset a fault. If you have an external source for the start command and the start is on, the drive will start immediately after the fault reset, unless you configure the drive for pulse start. See the firmware manual.
- Before you activate the automatic fault reset or automatic restart functions of the drive control program, make sure that no dangerous situations can occur. These functions reset the drive automatically and continue operation after a fault or supply break. If these functions are activated, the installation must be clearly marked as defined in IEC/EN 61800-5-1, subclause 6.5.3, for example, "THIS MACHINE STARTS AUTOMATICALLY".

Note:

- The maximum drive power cycles is five times in ten minutes. Power cycling the drive too often can damage the charging circuit of the DC capacitors. If you need to start or stop the drive, use the control panel keys or commands through the I/O terminals of the drive.
- If the drive is in remote control mode, you cannot stop or start the drive with the control panel.

Additional instructions for permanent magnet motor drives

Safety in installation, start-up, maintenance

These are additional warnings concerning permanent magnet motor drives. The other safety instructions in this chapter are also valid.

WARNING!
Obey these instructions. If you ignore them, injury or death, or damage to the equipment can occur.

If you are not a qualified electrical professional, do not do installation or maintenance work.

- Do not do work on the drive when a rotating permanent magnet motor is connected to it. A rotating permanent magnet motor energizes the drive including its input and output power terminals.

Before installation, start-up and maintenance work on the drive:

- Stop the drive.
- Disconnect the motor from the drive with a safety switch or by other means.
- If you cannot disconnect the motor, make sure that the motor cannot rotate during work. Make sure that no other system, like hydraulic crawling drives, can rotate the motor directly or through any mechanical connection like felt, nip, rope, etc.
- Do the steps in section *Electrical safety precautions (page 17)*.
- Install temporary grounding to the drive output terminals (T1/U, T2/V, T3/W). Connect the output terminals together as well as to the PE.

During the start up:

- Make sure that the motor cannot run overspeed, for example, driven by the load. Motor overspeed causes overvoltage that can damage or destroy the capacitors in the intermediate circuit of the drive.

Safety in operation

WARNING!
Make sure that the motor cannot run overspeed, for example, driven by the load. Motor overspeed causes overvoltage that can damage or destroy the capacitors in the intermediate circuit of the drive.

2

Introduction to the manual

Contents of this chapter

The chapter describes the applicability, target audience and purpose of the manual. The chapter contains a list of related manuals and a flowchart for installation and commissioning.

Applicability

This manual is applicable to ACS380 drives.

Target audience

This manual is intended for people who plan the installation, install, start up and do maintenance work on the drive, or create instructions for the end user of the drive concerning the installation and maintenance of the drive.

Read the manual before working on the drive. You are expected to know the fundamentals of electricity, wiring, electrical components and electrical schematic symbols.

Categorization by frame size

The drives are manufactured in frame sizes (for example, R1). The information that is applicable only to specific frames is identified with the frame size. The frame size is shown on the type designation label.

Quick installation and commissioning flowchart

Task	See
Identify the frame size: R0, R1, R2, etc.	*Type designation key (page 37)*
Plan the installation. Check the ambient conditions, ratings and required cooling air flow.	*Guidelines for planning the electrical installation (page 49)* *Technical data (page 127)*
Unpack and check the delivery.	*Unpacking the delivery (page 45)*
If the supply network is not a symmetrically grounded TN-S system, make sure that the drive is compatible with the grounding system.	*Grounding system compatibility check – IEC (page 67)* *Grounding system compatibility check – North America (page 91)*
Install the drive.	*Installing the drive (page 45)*
Route the cables.	*Routing the cables (page 57)*
Measure the insulation of the input cable, motor and motor cable.	*Measuring the insulation resistance (page 66)*
Connect the power cables.	*Connecting the power cables – IEC (shielded cables) (page 72)* *Connecting the power cables – North America (wiring in conduits) (page 96)*
Connect the control cables.	*Connecting the control cables (page 74)*
Examine the installation.	*Installation checklist (page 115)*
Commission the drive.	Refer to *ACS380 Quick installation and start-up guide* (3AXD50000018553 [English]) and *ACS380 Firmware manual* (3AXD50000029275 [English]).

Terms and abbreviations

Term	Description
ACS-AP-I	Industrial assistant non-Bluetooth control panel
ACS-AP-S	Standard assistant control panel
ACS-AP-W	Industrial assistant control panel with Bluetooth interface
ACS-BP-S	Basic control panel
BAPO	Optional auxiliary power extension module
BCAN	Optional CANopen adapter module
BCBL-01	Optional USB to RJ45 cable
BIO-01	Optional I/O extension module. Can be installed to the drive together with a fieldbus adapter module.
BMIO-01	I/O & Modbus extension module
Brake chopper	Conducts the surplus energy from the intermediate circuit of the drive to the brake resistor when necessary. The chopper operates when the DC link voltage exceeds a certain maximum limit. The voltage rise is typically caused by deceleration (braking) of a high inertia motor.
Brake resistor	Dissipates the drive surplus braking energy conducted by the brake chopper to heat
BREL	Optional relay output extension module
BTAC	Optional encoder interface module
Capacitor bank	The capacitors connected to the DC link
CCA-01	Configuration adapter
Control unit	The part in which the control program runs.
DC link	DC circuit between rectifier and inverter
DC link capacitors	Energy storage which stabilizes the intermediate circuit DC voltage
Drive	Frequency converter for controlling AC motors
EFB	Embedded fieldbus
EMC	Electromagnetic compatibility
FBA	Fieldbus adapter
FCAN	Optional CANopen® adapter module
FCNA-01	Optional ControlNet™ adapter module
FDNA-01	Optional DeviceNet™ adapter module
FECA-01	Optional EtherCAT® adapter module
FENA-21	Optional Ethernet adapter module for EtherNet/IP™, Modbus TCP® and PROFINET IO® protocols, 2-port
FEPL-02	Optional Ethernet POWERLINK adapter module
FPBA-01	Optional PROFIBUS DP® adapter module
Frame, frame size	Physical size of the drive or power module
IGBT	Insulated gate bipolar transistor
Intermediate circuit	DC circuit between rectifier and inverter
Inverter	Converts direct current and voltage to alternating current and voltage.

Term	Description
Macro	A pre-defined set of default values of parameters in a drive control program.
NETA-21	Remote monitoring tool
Network control	With fieldbus protocols based on the Common Industrial Protocol (CIPTM), such as DeviceNet and Ethernet/IP, denotes the control of the drive using the Net Ctrl and Net Ref objects of the ODVA AC/DC Drive Profile. For more information, see www.odva.org.
Parameter	In the drive control program, user-adjustable operation instruction to the drive, or signal measured or calculated by the drive. In some (for example fieldbus) contexts, a value that can be accessed as an object, eg, variable, constant, or signal.
PLC	Programmable logic controller
Rectifier	Converts alternating current and voltage to direct current and voltage
RFI	Radio-frequency interference
SIL	Safety integrity level (1...3) (IEC 61508)
STO	Safe torque off (IEC/EN 61800-5-2)

Related manuals

Name	Code
Drive manuals and guides	
ACS380 drives hardware manual	3AXD50000029274
ACS380 drives quick installation and start-up guide	3AXD50000018553
ACS380 user interface guide	3AXD50000022224
ACS380 machinery control program firmware manual	3AXD50000029275
ACS380 drives recycling instructions and environmental information	3AXD50000049465
Option manuals and guides	
ACS-AP-x assistant control panel user’s manual	3AUA0000085685
ACS-BP-S Basic control panel user's manual	3AXD50000032527
DPMP-01 mounting platform for ACx-AP-x control panel	3AUA0000100140
DPMP-02/03 mounting platform for ACx-AP-x control panel	3AUA0000136205
FPBA-01 PROFIBUS DP adapter module quick guide	3AXD50000158188
FPBA-01 PROFIBUS DP adapter module user's manual	3AFE68573271
FCAN-01 CANopen adapter module quick guide	3AXD50000158195
FCAN-01 CANopen adapter module user's manual	3AFE68615500
FECA-01 EtherCAT adapter module quick guide	3AXD50000158553
FECA-01 EtherCAT adapter module user's manual	3AUA0000068940
FENA-21 Ethernet adapter module quick guide	3AXD50000158522
FEPL-02 Ethernet POWERLINK adapter module quick guide	3AXD50000158164
FEPL-02 Ethernet POWERLINK adapter module user's manual	3AUA0000123527
UL Type 1 kit for ACS380, ACH480 and ACS480 installation guide, frames R0 to R2	3AXD50000235254

Name	Code
UL Type 1 kit for ACS380, ACH480 and ACS480 installation guide, frames R3 to R4	3AXD50000242375
Tool and maintenance manuals	
Drive composer PC tool user's manual	3AUA0000094606
Converter module capacitor reforming instructions	3BFE64059629
NETA-21 remote monitoring tool user’s manual	3AUA0000096939
NETA-21 remote monitoring tool installation and start-up guide	3AUA0000096881

You can find manuals and other product documents in PDF format on the Internet at www.abb.com/drives/documents.

The code below opens an online listing of the manuals applicable to this product.

ACS380 manuals

3

Operation principle and hardware description

Contents of this chapter

This chapter briefly describes the operation principle and construction of the drive.

Operation principle

The ACS380 is a drive for controlling asynchronous AC induction motors, permanent magnet synchronous motors and ABB synchronous reluctance motors (SynRM motors). The drive is optimized for cabinet installation.

Simplified main circuit diagram

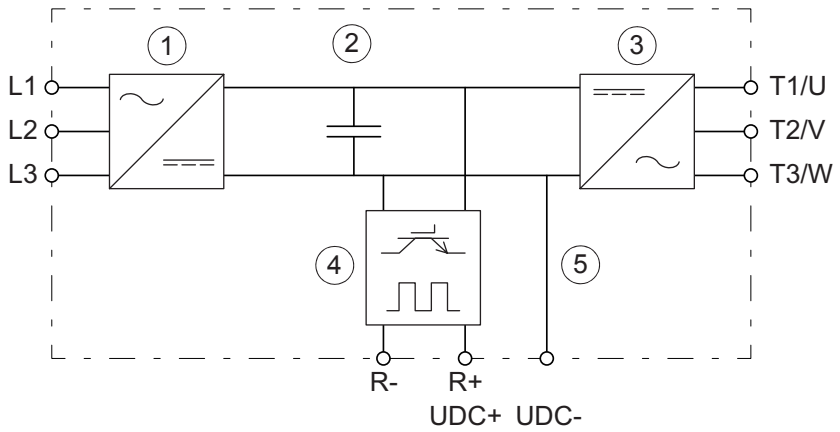

1	Rectifier. Converts alternating current and voltage to direct current and voltage.
2	DC link. DC circuit between rectifier and inverter.
3	Inverter. Converts direct current and voltage to alternating current and voltage.
4	Brake chopper. Conducts energy from the intermediate DC circuit of the drive to the brake resistor when it is necessary and if an external brake resistor is connected to the drive. The chopper operates when the DC link voltage exceeds a certain maximum limit. The voltage rise is typically caused by deceleration (braking) of a motor. The user obtains and installs the brake resistor when necessary.
5	DC connection (UDC+, UDC-).

Product variants

The drive has three primary product variants:

- Standard variant (ACS380-04xS) with BMIO-01 I/O & Modbus extension module
- Configured variant (ACS380-04xC) for which the extension module, such as the fieldbus adapter, is chosen when ordering
- Base variant (ACS380-04xN) without extension modules.

Layout

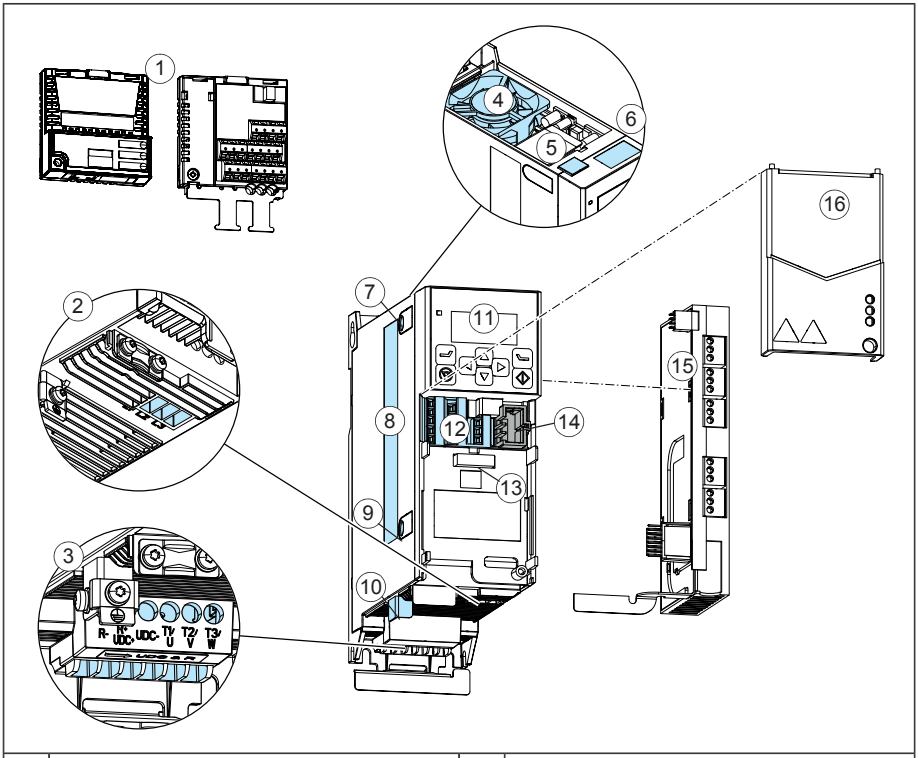

1	Front option modules	9	Varistor grounding screw
2	Input power terminals	10	PE connection (motor)
3	Motor and brake resistor terminals	11	Control panel, display and status LED
4	Cooling fan (on frames R1…R4)	12	Control terminals
5	Panel and PC tool port (RJ45)	13	Front option slot
6	Model information label	14	Cold configuration connection for CCA-01
7	EMC filter grounding screw	15	Side option module
8	Type designation label	16	Front cover

Control connections

In addition to the fixed control connections in the base unit, the other control connections depend on the drive variant.

Standard variant (I/O and Modbus) (ACS380-04xS)

The standard variant has a type code as follows: ACS380-04x**S**. It is supplied with the BMIO-01 I/O and Modbus extension module.

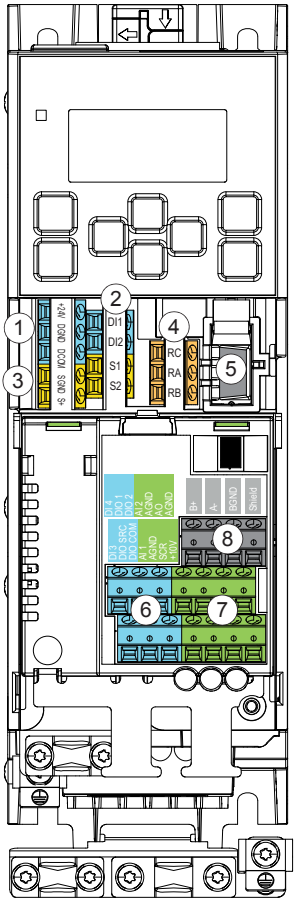

Connections on the base unit:

1. Auxiliary voltage outputs
2. Digital inputs
3. Safe torque off connections
4. Relay output connection
5. Cold configuration connection for CCA-01

Connections on BMIO-01:

6. Digital inputs and outputs
7. Analog inputs and outputs
8. EIA-485 Modbus RTU

Configured variant (ACS380-04xC)

The configured variant has a type code as follows: ACS380-04x**C** followed by an option code that indicates the extension module. Use the configured variant to order a product with a specific fieldbus extension module.

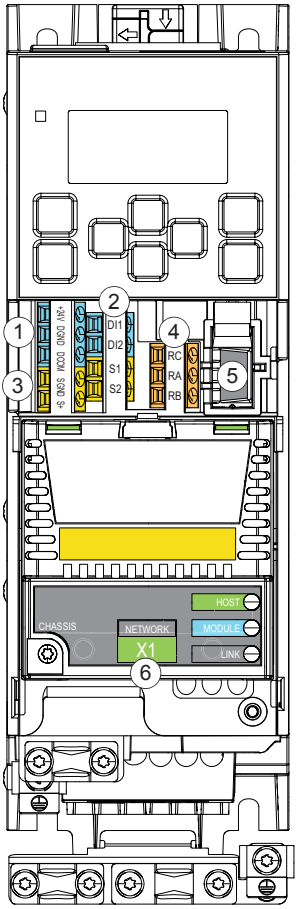

Connections:

1. Auxiliary voltage outputs
2. Digital inputs
3. Safe torque off connections
4. Relay output connection
5. Cold configuration connection for CCA-01
6. Fieldbus connections depending on the module

Base variant (ACS380-04xN)

The base variant has a type code as follows: ACS380-04x**N**. It is supplied without an extension module.

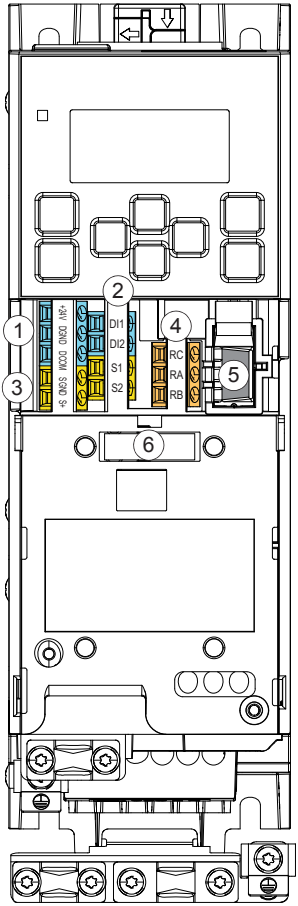

Connections:

1. Auxiliary voltage outputs
2. Digital inputs
3. Safe torque off connections
4. Relay output connection
5. Cold configuration connection for CCA-01
6. Option module slot 1

Option modules

The drive supports option modules (optional extension modules). For a list of option modules, refer to *Type designation key (page 37)*.

You can use option modules to increase the number of inputs and outputs on the drive. The table shows a comparison between the base unit and different option modules.

I/O	Base unit (ACS380-04xx)	BMIO-01 (ACS380-04xS)	BIO-01	BREL-01
Inputs				
Digital inputs	2 (DI1, DI2)	4 (DI3, DI4, DIO1, DIO2)	3 (DI3, DI4, DI5)	-
Frequency inputs	-	2 (DI3, DI4)	2 (DI4, DI5)	-
Counter inputs	-	1 (DI3)	1 (DI4)	-
Analog inputs	-	2 (AI1, AI2)	1 (AI1)	-
Outputs				
Relay outputs	1 (RO1)	-	-	4 (RO4, RO5, RO6, RO7)
Digital outputs	-	2 (DIO1, DIO2)	1 (DIO1)	-
Frequency outputs	-	2 (DIO1, DIO2)	1 (DIO1)	-
Analog outputs	-	1 (AO1)	1 (AO1)	-

Note: The number of inputs and outputs depends on the configuration. For example, DIO can be configured as digital input or output.

Control panel options

The drive supports these control panels:

- integrated control panel
- ACS-AP-S assistant control panel
- ACS-AP-W assistant control panel with Bluetooth
- ACS-AP-I assistant control panel
- ACS-BP-S basic control panel

In addition, you can order a control panel platform for cabinet door installation. These panel platforms are available:

Type	Description
DPMP-01	Control panel mounting platform (flush mounting) and cable

Type	Description
DPMP-02	Control panel mounting platform (surface mounting) and cable

UL Type 1 kits

There are UL Type 1 kit options available for the drive. For the ordering codes and installation instructions, refer to the table that follows.

Frame size	Option code	Installation instructions
R0	3AXD50000187034	UL Type 1 kit for ACS380, ACS480 and ACH480 installation guide, frames R0 to R2 (3AXD50000235254)
R1	3AXD50000176779	
R2	3AXD50000178780	
R3	3AXD50000179220	UL Type 1 kit for ACS380, ACS480 and ACH480 installation guide, frames R3 to R4 (3AXD50000242375)
R4	3AXD50000179336	

Note: A wall-mounted drive with the UL Type 1 kit requires fuses for short-circuit protection. Manual motor protectors or miniature circuit breakers cannot be used. For more information, refer to the technical data in this manual.

Drive labels

The drive has two labels:

- model information label on the top of the drive
- type designation label on the left side of the drive.

Example labels are shown in this section.

Model information label

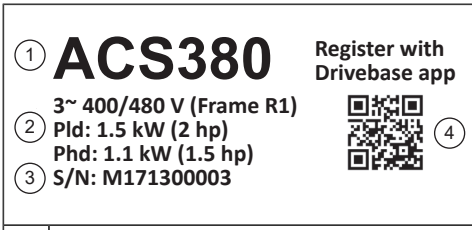

1	Drive type
2	Frame size and ratings
3	Serial number
4	QR code to register the drive

Type designation label

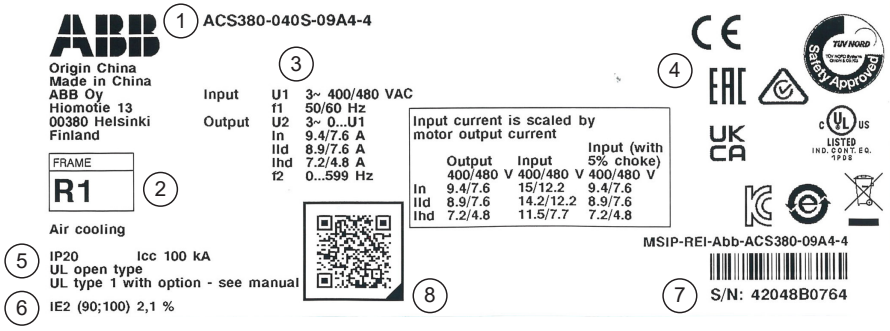

1	Type designation
2	Frame (size)
3	Nominal ratings
4	Valid markings
5	Degree of protection
6	Losses according to IEC 61800-9-2
7	S/N: Serial number of format MYYWWXXXXX, where M: Manufacturer YY: Year of manufacture: 19, 20, 21, … for 2019, 2020, 2021, … WW: Week of manufacture: 01, 02, 03, … for week 1, week 2, week 3, … XXXX: Running item number that starts each week from 0001.
8	QR code to product information page

Type designation key

The type designation key shows the specifications and the configuration of the drive.

Basic code

Type code example: ACS380-042S-02A6-4.

Code	Description	
ACS380	Product series	
042S	04	Construction: • 04 = Module. When there are no options selected: module optimized for cabinet installation, degree of protection IP20 (UL open type), bottom cable entry, Safe torque off, brake chopper, coated boards, quick installation and start-up guides.
	2	EMC filter variant: • 0 = Low filtering level, EN 61800-3 category C3 (400 V) or C4 (230 V). [1)] • 2 = High filtering level, EN 61800-3 category C2. [2)]
	S	Connectivity: • S = Standard variant with BMIO-01 I/O and Modbus module. • C = Configured variant with I/O or fieldbus module, selected with an option code. • N = Base variant without I/O or fieldbus module.
02A6	Size. See the ratings table in the technical data.	
4	Input voltage: • 1 = 1-phase 200 … 240 V AC • 2 = 3-phase 200 … 240 V AC • 4 = 3-phase 380 … 480 V AC.	

1) 230 V drives with low filtering level do not have an internal EMC filter. 400 V drives have a category C3 filter.
2) High filtering level not available for 3-phase 230 V drives.

Option codes

Option codes are separated by plus signs. The table below gives the option codes.

Code	Description
Fieldbus adapters	
K451	FDNA-01 DeviceNet
K454	FPBA-01 Preconfigured PROFIBUS DP
K457	FCAN-01 Preconfigured CANopen
K469	FECA-01 Preconfigured EtherCAT
K470	FEPL-02 Ethernet POWERLINK
K475	FENA-21 Preconfigured Profinet (Ethernet/IP or Modbus/TCP built-in)
K490	FEIP-21 Preconfigured EtherNet/IP protocol
K491	FMBT-21 Preconfigured Modbus/TCP protocol
K492	FPNO-21 Preconfigured PROFINET IO protocol

Code	Description
K495	BCAN-11 Preconfigured CANopen
I/O	
L511	BREL-01 External relay option (4x relay) (side option)
L515	BIO-01 I/O extension module (front option, can be used together with fieldbus)
L534	BAPO-01 External 24 V DC (side option)
L535	BTAC-02 HTL encoder interface + External 24 V DC (side option)
L538	BMIO-01 I/O & Modbus extension module (front option, not available with other front options)
Documentation [1]	
R700	English
R701	German
R702	Italian
R703	Dutch
R704	Danish
R705	Swedish
R706	Finnish
R707	French
R708	Spanish
R709	Portuguese (Brazil)
R711	Russian
R712	Chinese
R713	Polish
R714	Turkish

[1] The option code determines the language variants of the hardware manual and firmware manual. The product package includes the user interface guide and quick installation and start-up guide in English, French, German, Italian and Spanish, and in the local language (if available).

Control panel

The drive has an integrated control panel with a display and control keys.

For quick reference, there is a *ACS380 User interface guide* (3AXD50000022224 [English]) under the main cover of the drive.

Refer to the *ACS380 Firmware manual* (3AXD50000029275 [English]) for information on how to use the interface, start-up the drive and modify settings and parameters.

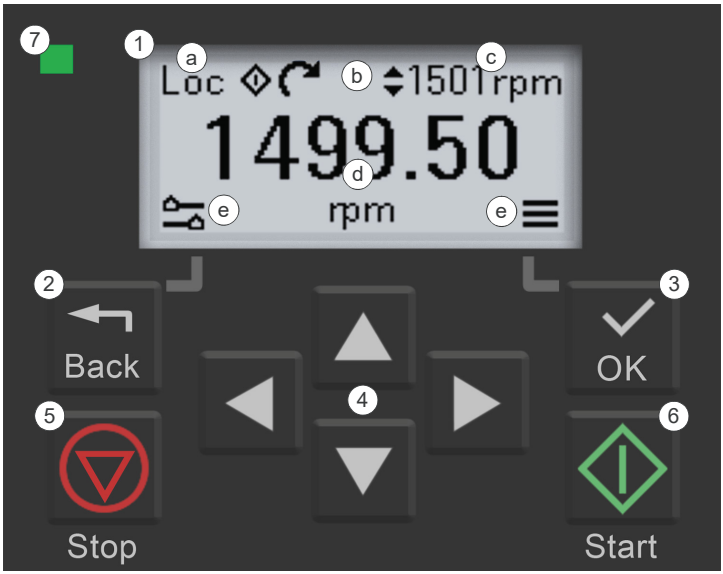

1	Display (*Home* view): a) Control location: local or remote b) Status icons c) Reference target value d) Actual measured value e) Left and right softkey actions
2	*Back* key (opens the *Options* view in the *Home* view)
3	*OK* key (opens the *Menu* in the *Home* view)
4	Arrow keys (menu navigation and setting values)
5	*Stop* key (when the drive is locally controlled)
6	*Start* key (when the drive is locally controlled)
7	Status LED: • Steady green: Normal operation • Blinking green: Active warning • Steady red: Active fault • Blinking red: Active fault, set power to off to reset

The user interface in brief:

- In the *Home* view, push the *Back* key to open the *Options* view.
- In the *Home* view, push the *OK* key to open the *Menu*.
- Navigate the views with the arrow keys.

- Push the *OK* key to open the highlighted setting or item.
- Use the left and right arrow keys to highlight a value.
- Use the up and down keys to set a value.
- Push the *Back* key to cancel a setting or return to the previous view.

Home view

The *Home* view shows the reading of one of three measured signals. Select the page with the left and right arrow keys.

The status bar at the top of the *Home* view shows:

- The control location (*Loc* for local control and *Rem* for remote control)
- The status icons
- The reference target value

From the Home view, push the *Back* key to open the *Options* view and push the *OK* key to open the *Menu*.

Adjust the current reference value with the up and down arrow keys.

Status icons

Icon	Animation	Description
	None	Local Start/Stop enabled
	None	Stopped
	None	Stopped, start inhibited
	Blinks	Stopped, start commanded but inhibited
	Rotates	Running at reference
	Rotates	Running but not at reference
	Blinks	Running at reference, but reference = 0
	Blinks	Drive fault
	None	Local reference setting enabled

Message view

When a fault or warning occurs, the display shows the *Message* view. The *Message* view shows either the active fault as an icon and fault code, or a list of the most recent warnings codes.

Refer to the *ACS380 User interface guide* (3AXD50000022224 [English]) or *ACS380 Quick installation and start-up guide* (3AXD50000018553 [English]) for a list of the most typical faults and warnings.

For more detailed fault and warning information, refer to the *ACS380 Firmware manual* (3AXD50000029275 [English]).

To reset a fault, push the *OK* key (with the soft-key label *Reset?*).

Options view

To open the *Options* view, push the *Back* key in the *Home* view.

In the *Options* view, you can:

- Set the control location
- Set the direction of the motor
- Set the reference
- View the active fault
- View a list of the active warnings.

Menu

To open the *Menu*, push the *OK* key in the *Home* view.

To navigate in the *Menu*, push the up and down arrow keys to move between menu items.

Menu items:

- *Motor data view*: Enter the motor specifications.
- *Motor control view*: Set the motor control settings.
- *Control macros view*: Select the connection parameter macro.
- *Diagnostics view*: Read the active faults and warnings.
- *Energy efficiency view*: Monitor the efficiency of the drive.
- *Parameters view*: Open and edit the full list of parameters.

For detailed information on the user interface, refer to the *ACS380 Firmware manual* (3AXD50000029275 [English]).

4

Mechanical installation

Contents of this chapter

This chapter tells how to examine the installation site, unpack and examine the delivery and install the drive mechanically.

Installation alternatives

You can install the drive:

- with screws on to a wall
- with screws on to an assembly plate
- on to a DIN installation rail (IEC/EN 60715, top hat type, width 35 mm [1.4 in] × height 7.5 mm [0.3 in]).

Installation requirements:

- The drive is designed for cabinet installation and has a degree of protection of IP20 / UL open type as standard. A UL Type 1 kit is available as an option.
- Make sure that there is a minimum of 75 mm (3 in) of free space at the top and bottom of the drive (at the cooling air inlet and outlet), measured from the frame. With the optional UL Type 1 kit, make sure that there is a minimum of 50 mm (2 in) of free space at the top (measured from the top of the hood) and 75 mm (3 in) at the bottom of the drive.
- You can install several drives side by side. Note that side-mounted options require 20 mm (0.8 in) of space on the right side of the drive.
- Install R0 drives vertically, because they do not have a cooling fan.

- You can install frames R1, R2, R3 and R4 tilted to a maximum of 90 degrees, from vertical to fully horizontal orientation.

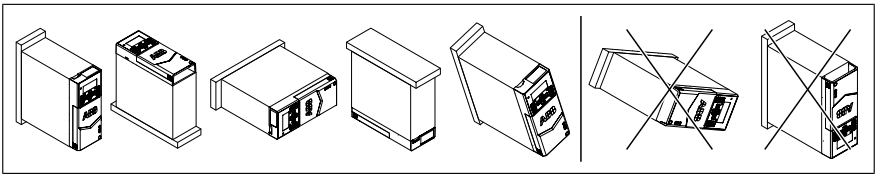

- Do not install the drive upside down.
- Make sure that the hot exhaust air from a drive does not flow into the cooling inlet of other drives or equipment.
- Drives equipped with the optional UL Type 1 kits: If you install the drives side-by-side, make sure that their air outlets do not face each other.

Examining the installation site

Examine the installation site. Make sure that:

- The installation site is sufficiently ventilated or cooled to remove heat from the drive. See the technical data.
- The ambient conditions of the drive meet the specifications. See the technical data.
- The wall behind the drive and the material above and below the unit is of non-flammable material.
- The installation surface is as close to vertical as possible and strong enough to support the drive.
- There is sufficient free space around the drive for cooling, maintenance, and operation. See the free space specifications for the drive.
- Make sure that there are no sources of strong magnetic fields such as high-current single-core conductors or contactor coils near the drive. A strong magnetic field can cause interference or inaccuracy in the operation of the drive.

Required tools

To install the drive mechanically, you need these tools:

- a drill and suitable drill bits
- a screwdriver or wrench with a set of suitable bits
- a tape measure and spirit level
- personal protective equipment.

Unpacking the delivery

Keep the drive in its package until you are ready to install it. After unpacking, protect the drive from dust, debris and moisture.

Make sure that these items are included:

- drive
- options, if ordered with an option code
- BMIO-01 I/O module (in standard variant) or other extension module (in configured variant)
- mounting template (drives with frame size R3 or R4 only)
- installation accessories (cable clamps, cable ties, hardware)
- multilingual warning sticker sheet (residual voltage warning)
- safety instructions
- quick installation and start-up guide
- user interface guide (behind the drive front cover)
- hardware and firmware manuals, if ordered with an option code.

Make sure that there are no signs of damage to the items.

Installing the drive

To install the drive with screws

1. Make marks onto the surface for the mounting holes. Use the included mounting template for frames R3 and R4. For other frames, see the dimension drawings.
2. Drill the holes for the mounting screws.
3. If necessary, install anchors or plugs into the holes.
4. Install the mounting screws into the holes. Leave a gap between the screw head and installation surface.

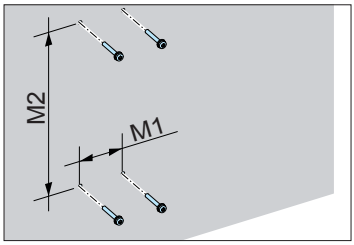

5. Put the drive onto the mounting screws.
6. Tighten the mounting screws.

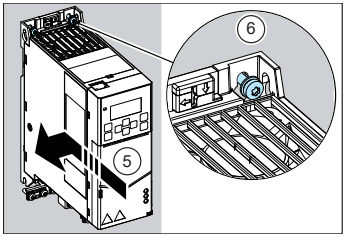

To install the drive to a DIN installation rail

Use an IEC/EN 60715 top hat type installation rail, width × height = 35 × 7.5 mm (1.4 × 0.3 in).

1. Move the locking part to the left.

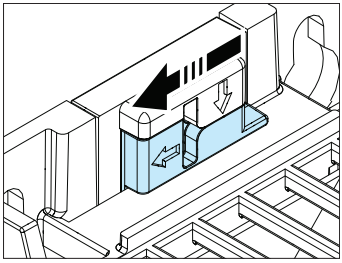

2. Push and hold the locking button down.

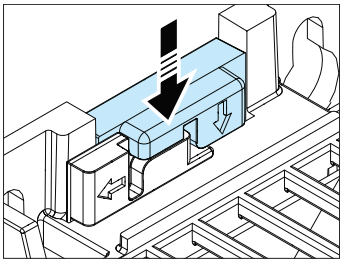

3. Put the top tabs of the drive onto the top edge of the DIN installation rail.
4. Put the drive against the bottom edge of the DIN installation rail.

5. Release the locking button.
6. Move the locking part to the right.
7. Make sure that the drive is correctly installed.

To remove the drive, use a flat-head screwdriver to open the locking part.

5

Guidelines for planning the electrical installation

Contents of this chapter

This chapter contains guidelines for planning the electrical installation of the drive.

Limitation of liability

The installation must always be designed and made according to applicable local laws and regulations. ABB does not assume any liability whatsoever for any installation which breaches the local laws and/or other regulations. Furthermore, if the recommendations given by ABB are not followed, the drive may experience problems that the warranty does not cover.

Selecting the main supply disconnecting device

You must equip the drive with a main supply disconnecting device which meets the local safety regulations. You must be able to lock the disconnecting device to the open position for installation and maintenance work.

European Union and United Kingdom

To meet the European Union Directives and United Kingdom Regulations, according to standard EN 60204-1, *Safety of Machinery*, the disconnecting device must be one of the following types:

- switch-disconnector of utilization category AC-23B (IEC 60947-3)
- disconnector that has an auxiliary contact that in all cases causes switching devices to break the load circuit before the opening of the main contacts of the disconnector (EN 60947-3)
- circuit-breaker suitable for isolation in accordance with IEC 60947-2.

North America

Installations must be compliant with NFPA 70 (NEC)[1)] and/or Canadian Electrical Code (CE) along with state and local codes for your location and application.

[1)] National Fire Protection Association 70 (National Electric Code).

Other regions

The disconnecting device must conform to the applicable local safety regulations.

Selecting the main contactor

You can equip the drive with a main contactor.

Follow these guidelines when you select a customer-defined main contactor:

- Dimension the contactor according to the nominal voltage and current of the drive. Also consider the environmental conditions such as surrounding air temperature.
- IEC devices only: Select contactor with utilization category AC-1 (number of operations under load) according to IEC 60947-4, *Low-voltage switch gear and control gear.*
- Consider the application life time requirements.

North America

Installations must be compliant with NFPA 70 (NEC)[1)] and/or Canadian Electrical Code (CE) along with state and local codes for your location and application.

[1)] National Fire Protection Association 70 (National Electric Code).

Other regions

The disconnecting device must conform to the applicable local safety regulations.

Checking the compatibility of the motor and drive

Use asynchronous AC induction motor, or permanent magnet synchronous motor with the drive. Multiple induction motors can be connected to the drive at a time when using the scalar motor control mode.

Make sure that the motor(s) and the drive are compatible according to the rating table in the technical data.

Selecting the power cables

General guidelines

Select the input power and motor cables according to local regulations.

- **Current:** Select a cable capable of carrying the maximum load current and suitable for the prospective short-circuit provided by the supply network. The method of installation and ambient temperature affect the cable current carrying capacity. Obey local regulations and laws.
- **Temperature:** For an IEC installation, select a cable rated for at least 70 °C (158 °F) maximum permissible temperature of conductor in continuous use.
  For North America, select a cable rated for at least 75 °C (167 °F).
  Important: For certain product types or option configurations higher temperature rating may be required. See the technical data for details.
- **Voltage:** 600 V AC cable is accepted for up to 500 V AC. 750 V AC cable is accepted for up to 600 V AC. 1000 V AC cable is accepted for up to 690 V AC.

To comply with the EMC requirements of the CE mark, use one of the preferred cable types. See *Preferred power cable types (page 52)*.

Symmetrical shielded cable reduces electromagnetic emission of the whole drive system as well as the stress on motor insulation, bearing currents and wear.

Metal conduit reduces electromagnetic emission of the whole drive system.

The protective conductor must always have an adequate conductivity.

Unless local wiring regulations state otherwise, the cross-sectional area of the protective conductor must agree with the conditions that require automatic disconnection of the supply required in 411.3.2 of IEC 60364-4-41:2005 and be capable of withstanding the prospective fault current during the disconnection time of the protective device. The cross-sectional area of the protective conductor can either be selected from the table below or calculated according to 543.1 of IEC 60364-5-54.

This table shows the minimum cross-sectional area of the protective conductor related to the phase conductor size according to IEC/UL 61800-5-1 when the phase conductor and the protective conductor are made of the same metal. If this is not so, the cross-sectional area of the protective grounding conductor shall be determined in a

manner which produces a conductance equivalent to that which results from the application of this table.

Cross-sectional area of the phase conductors S (mm^2)	Minimum cross-sectional area of the corresponding protective conductor S_p (mm^2)
S ≤ 16	S [1]
16 < S ≤ 35	16
35 < S	S/2

[1] To comply with standard IEC/EN 61800-5-1:
- use a protective earth conductor with a minimum cross-sectional area of 10 mm^2 Cu or 16 mm^2 Al (as an alternative when aluminum cables are permitted),
  or
- use a second protective earth conductor of the same cross-sectional area as the original protective earth conductor,
  or
- use a device that automatically disconnects the supply if the protective earth conductor is damaged.

If the protective earth conductor is separate (that is, it does not form part of the input power cable or the input power cable enclosure), the minimum cross-sectional area must be:
- 2.5 mm^2 when the conductor is mechanically protected,
  or
- 4 mm^2 when the conductor is not mechanically protected.

Typical power cable sizes

See the technical data.

Power cable types

Preferred power cable types

This section presents the preferred cable types. Make sure that the selected cable type also complies with local/state/country electrical codes.

Cable type	Use as input power cabling	Use as motor cabling
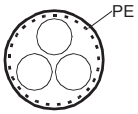 Symmetrical shielded (or armored) cable with three phase conductors and concentric PE conductor as shield (or armor)	Yes	Yes

Cable type	Use as input power cabling	Use as motor cabling
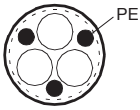 Symmetrical shielded (or armored) cable with three phase conductors and symmetrically constructed PE conductor and a shield (or armor)	Yes	Yes
Symmetrical shielded (or armored) cable with three phase conductors and a shield (or armor), and separate PE conductor/cable [1]	Yes	Yes

[1] A separate PE conductor is required if the conductivity of the shield (or armor) is not sufficient for the PE use.

Alternate power cable types

Cable type	Use as input power cabling	Use as motor cabling
Four-conductor cabling in PVC conduit or jacket (three phase conductors and PE)	Yes with phase conductor smaller than 10 mm^2 (8 AWG) Cu.	Yes with phase conductor smaller than 10 mm^2 (8 AWG) Cu, or motors up to 30 kW (40 hp). **Note:** Shielded or armored cable, or cabling in metal conduit is always recommended to minimize radio frequency interference.
Four-conductor cabling in metal conduit (three phase conductors and PE), eg, EMT, or four-conductor armored cable	Yes	Yes with phase conductor smaller than 10 mm^2 (8 AWG) Cu, or motors up to 30 kW (40 hp)

Cable type	Use as input power cabling	Use as motor cabling
Shielded (Al/Cu shield or armor)[1] four-conductor cable (three phase conductors and a PE)	Yes	Yes with motors up to 100 kW (135 hp). A potential equalization between the frames of motor and driven equipment is required.
A single-core cable system: three phase conductors and PE conductor on cable tray Preferable cable arrangement to avoid voltage or current unbalance between the phases	Yes **WARNING!** If you use unshielded single-core cables in an IT network, make sure that the non-conductive outer sheath (jacket) of the cables have good contact with a properly grounded conductive surface. For example, install the cables on a properly grounded cable tray. Otherwise voltage may become present on the non-conductive outer sheath of the cables, and there is even a risk of an electric shock.	No

[1] Armor may act as an EMC shield, as long as it provides the same performance as a concentric EMC shield of a shielded cable. To be effective at high frequencies, the shield conductivity must be at least 1/10 of the phase conductor conductivity. The effectiveness of the shield can be evaluated based on the shield inductance, which must be low and only slightly dependent on frequency. The requirements are easily met with a copper or aluminum shield/armor. The cross-section of a steel shield must be ample and the shield helix must have a low gradient. A galvanized steel shield has a better high-frequency conductivity than a non-galvanized steel shield.

Not allowed power cable types

Cable type	Use as input power cabling	Use as motor cabling
Symmetrical shielded cable with individual shields for each phase conductor	No	No

Additional guidelines, North America

ABB recommends the use of conduit for power wiring to the drive and between the drive and the motor(s). Due to the variety of application needs, metallic and non-metallic conduit can be used. ABB recommends the use of metallic conduit.

The following table shows examples of various materials and methods for wiring the drive in the intended application. See NEC 70 along with state and local codes for the appropriate materials for your application.

In all applications, ABB prefers the use of symmetrical shielded VFD cable between drive and motor(s).

Wiring method	Notes
Conduit - Metallic [1] [2]	
Electrical metallic tubing: Type EMT	Prefer symmetrical shielded VFD cable. Use separate conduit run for each motor. Do not run input power wiring and motor wiring in the same conduit.
Rigid metal conduit: Type RMC	
Liquid-tight flexible metal electrical conduit: Type LFMC	
Conduit - Non-metallic [2] [3]	
Liquid-tight flexible non-metallic conduit: Type LFNC	Prefer symmetrical shielded VFD cable. Use separate conduit run for each motor. Do not run input power wiring and motor wiring in the same conduit.
Wireways [2]	
Metallic	Prefer symmetrical shielded VFD cable. Separate motor wiring from input power wiring and other low voltage wiring. Do not run outputs of multiple drives parallel. Bundle each cable (wiring) together and use separators where possible.
Free air [2]	
Enclosures, air handlers, etc.	Prefer symmetrical shielded VFD cable. Allowed internally in enclosures when in accordance with UL.

[1] Metallic conduit may be used as an additional ground path, provided this path is a solid path capable of handling ground currents.

[2] See NFPA NEC 70, UL, and local codes for your application.

[3] Non-metallic conduit use underground is allowed; however, these installations inherently have an increased chance for nuisance problems due to the potential for water/moisture in the conduit. Water/moisture in the conduit increases the likelihood of VFD faults or warnings. Proper installation is required to make sure there is no intrusion of water/moisture.

Metal conduit

Couple separate parts of a metal conduit together: bridge the joints with a ground conductor bonded to the conduit on each side of the joint. Also bond the conduits to the drive enclosure and motor frame. Use separate conduits for input power, motor, brake

resistor, and control wiring. Do not run motor wiring from more than one drive in the same conduit.

Power cable shield

If the cable shield is used as the sole protective earth (PE) conductor, make sure that its conductivity agrees with the PE conductor requirements.

To effectively suppress radiated and conducted radio-frequency emissions, the cable shield conductivity must be at least 1/10 of the phase conductor conductivity. The requirements are easily met with a copper or aluminum shield. The minimum requirement of the motor cable shield of the drive is shown below. It consists of a concentric layer of copper wires with an open helix of copper tape or copper wire. The better and tighter the shield, the lower the emission level and bearing currents.

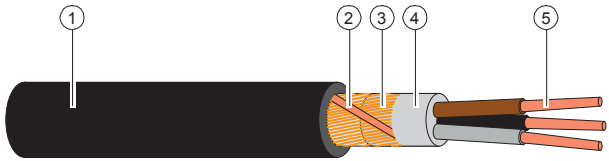

1	Insulation jacket
2	Helix of copper tape or copper wire
3	Copper wire shield
4	Inner insulation
5	Cable core

Selecting the control cables

Shielding

Only use shielded control cables.

Use a double-shielded twisted pair cable for analog signals. This type of cable is recommended for the pulse encoder signals also. Use one individually shielded pair for each signal. Do not use common return for different analog signals.

A double-shielded cable (a) is the best alternative for low-voltage digital signals, but single-shielded (b) twisted pair cable is also acceptable.

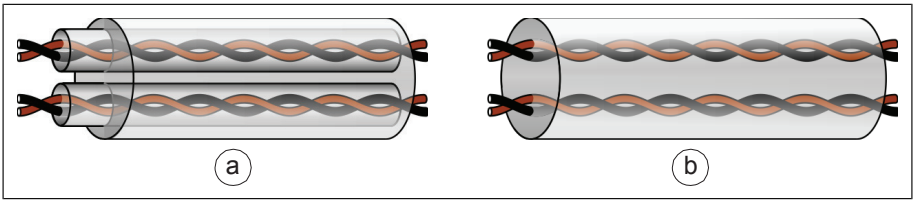

Signals in separate cables

Run analog and digital signals in separate, shielded cables. Do not mix 24 V DC and 115/230 V AC signals in the same cable.

Signals that can be run in the same cable

If their voltage does not exceed 48 V, relay-controlled signals can be run in the same cables as digital input signals. The relay-controlled signals should be run as twisted pairs.

Relay cable

The cable type with braided metallic shield (for example ÖLFLEX by LAPPKABEL, Germany) has been tested and approved by ABB.

Control panel to drive cable

Use EIA-485 with male RJ-45 connector, cable type Cat 5e or better. The maximum permitted length of the cable is 100 m (328 ft).

PC tool cable

Connect the Drive composer PC tool to the drive through the USB port of the control panel. Use a USB Type A (PC) - Type Mini-B (control panel) cable. The maximum length of the cable is 3 m (9.8 ft).

Routing the cables

General guidelines – IEC

- Route the motor cable away from other cables. Motor cables of several drives can be run in parallel installed next to each other.
- Install the motor cable, input power cable and control cables on separate trays.
- Avoid long parallel runs of motor cables with other cables.

- Where control cables must cross power cables, make sure that they are arranged at an angle as near to 90 degrees as possible.
- Do not run extra cables through the drive.
- Make sure that the cable trays have good electrical bonding to each other and to the grounding electrodes. Aluminum tray systems can be used to improve local equalizing of potential.

The following figure illustrates the cable routing guidelines with an example drive.

Note: When motor cable is symmetrical and shielded and it has short parallel runs with other cables (< 1.5 m / 5 ft), distances between the motor cable and other cables can be reduced by half.

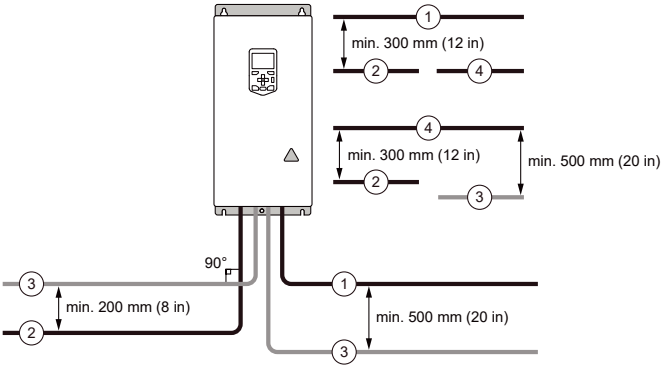

1	Motor cable
2	Input power cable
3	Control cable
4	Brake resistor or chopper cable (if any)

General guidelines – North America

Make sure that the installation is in accordance with national and local codes. Obey these general guidelines:

- Use separate conduits for the input power, motor, brake resistor (optional), and control cabling.
- Use separate conduit for each motor cabling.

The following figure illustrates the cable routing guidelines with an example drive.

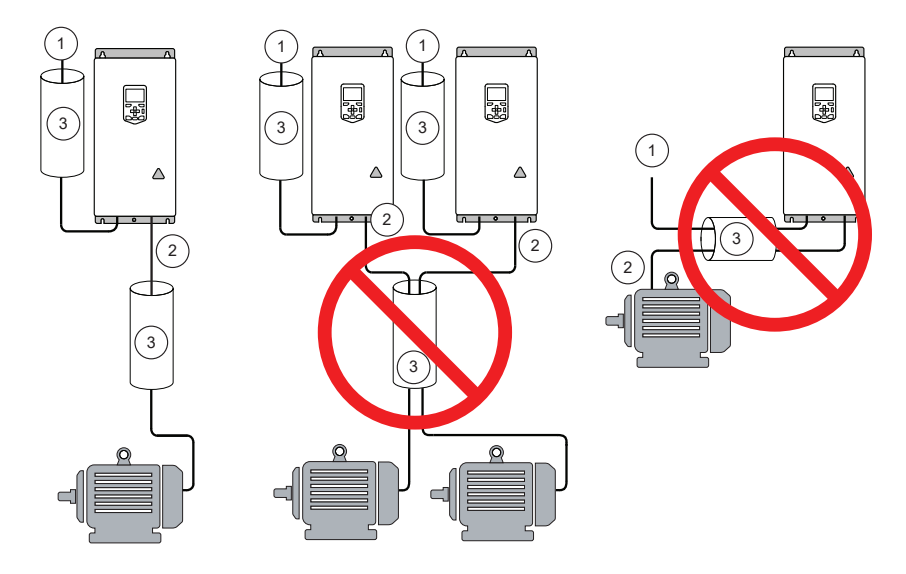

1	Input power cabling
2	Motor cabling
3	Conduit

Continuous motor cable shield/conduit or enclosure for equipment on the motor cable

To minimize the emission level when safety switches, contactors, connection boxes or similar equipment are installed on the motor cable between the drive and the motor:

- Install the equipment in a metal enclosure.
- Use either a symmetrical shielded cable, or install the cabling in a metal conduit.
- Make sure that there is a good and continuous galvanic connection in the shield/conduit between drive and motor.
- Connect the shield/conduit to the protective ground terminal of the drive and the motor.

Separate control cable ducts

Put 24 V DC and 230 V AC (120 V AC) control cables in separate ducts, unless the 24 V DC cable is insulated for 230 V AC (120 V AC) or insulated with an insulation sleeving for 230 V AC (120 V AC).

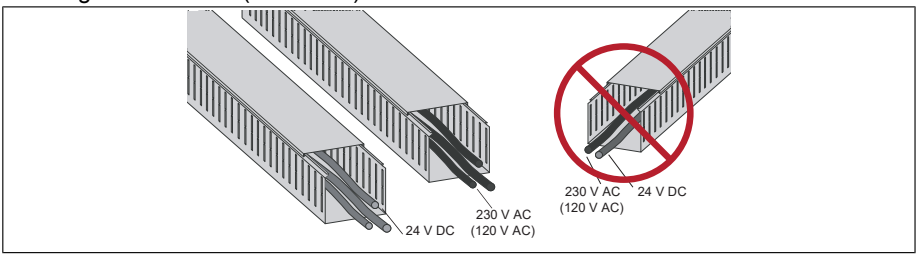

Implementing short-circuit and thermal overload protection

Protecting the drive and input power cable in short-circuits

Use the fuses specified for the drive in the technical data. Make sure that also the electric power supply network meets the specification (minimum allowed short-circuit current that the fuse selection is based on).

The fuses restrict drive damage and prevent damage to adjoining equipment in case of a short-circuit inside the drive. When located at the distribution board, the fuses also protect the input power cable against short circuits.

See the drive technical data for alternative short-circuit protections.

Protecting the motor and motor cable in short-circuits

The drive protects the motor cable and motor in a short-circuit situation when the motor cable is sized according to the nominal output current of the drive.

Protecting the drive, and the input power and motor cables against thermal overload

If the cables have the correct size for the nominal current, the drive protects itself and the input and motor cables against thermal overload. No additional thermal protection devices are needed.

WARNING!
If the drive is connected to multiple motors, use a separate motor thermal overload device for protecting each motor cable and motor against overload. The drive overload protection is for the sum of the total motor load. It may not trip due to an overload in one motor.

Protecting the motor against thermal overload

According to regulations, the motor must be protected against thermal overload and the current must be switched off when overload is detected. The drive includes a motor thermal protection function that protects the motor and switches off the current when necessary. Depending on a drive parameter value, the function either monitors a calculated temperature value (based on a motor thermal model) or an actual temperature indication given by motor temperature sensors.

The motor thermal protection model supports thermal memory retention and speed sensitivity. The user can tune the thermal model further by feeding in additional motor and load data.

The most common temperature sensor types are PTC or Pt100.

For more information, see the firmware manual.

Protecting the motor against overload without thermal model or temperature sensors

Motor overload protection protects the motor against overload without using motor thermal model or temperature sensors.

Motor overload protection is required and specified by multiple standards including the US National Electric Code (NEC) and the common UL/IEC 61800-5-1 standard in conjunction with UL/IEC 60947-4-1. The standards allow for motor overload protection without external temperature sensors.

The protection feature allows the user to specify the class of operation in the same manner as the overload relays are specified in standards UL/IEC 60947-4-1 and NEMA ICS 2.

The motor overload protection supports thermal memory retention and speed sensitivity.

For more information, see drive firmware manual.

Implementing a motor temperature sensor connection

WARNING!
IEC 61800-5-1 requires double or reinforced insulation between live parts and accessible parts when:

- the accessible parts are not conductive, or
- the accessible parts are conductive, but not connected to the protective earth.

Obey this requirement when you plan the connection of the motor temperature sensor to the drive.

You have these implementation alternatives:

1. If there is double or reinforced insulation between the sensor and the live parts of the motor: You can connect the sensor directly to the analog/digital input(s) of the drive. See the control cable connection instructions. Make sure that the voltage does not exceed the maximum allowed voltage over the sensor.
2. If there is basic insulation between the sensor and the live parts of the motor: You can connect the sensor to the analog/digital input(s) of the drive. All other circuits connected to the digital and analog inputs (typically extra-low voltage circuits) must be:
   - protected against contact, and
   - insulated with basic insulation from other low-voltage circuits. The insulation must be rated for the same voltage level as the drive main circuit.

   Note: Extra-low voltage circuits (for example, 24 V DC) typically do not meet these requirements.

   Make sure that the voltage does not exceed the maximum allowed voltage over the sensor.

   As an alternative, you can connect the sensor with basic insulation to the analog/digital input(s) of the drive, if you do not connect any other external control circuits to the drive digital and analog inputs.
3. You can connect a sensor to a digital input of the drive via an external relay. The sensor and the relay must form a double or reinforced insulation between the motor live parts and the digital input of the drive. Make sure that the voltage does not exceed the maximum allowed voltage over the sensor.

Protecting the drive against ground faults

The drive is equipped with an internal ground fault protective function to protect the unit against ground faults in the motor and motor cable. This function is not a personnel safety or a fire protection feature. See the firmware manual for more information.

Residual current device compatibility

The drive is suitable to be used with residual current devices of Type B.

Note: As standard, the drive contains capacitors connected between the main circuit and the frame. These capacitors and long motor cables increase the ground leakage current and may cause nuisance faults in residual current devices.

Implementing the Emergency stop function

For safety reasons, install the emergency stop devices at each operator control station and at other operating stations where emergency stop may be needed. Design the emergency stop according to the applicable standards.

You can use the Safe torque off function of the drive to implement the Emergency stop function.

Note: Pressing the stop (off) key on the control panel of the drive does not generate an emergency stop of the motor or separate the drive from dangerous potential.

Implementing the Safe torque off function

See chapter *The Safe torque off function (page 183)*.

Using a safety switch between the drive and the motor

ABB recommends to install a safety switch between the permanent magnet motor and the drive output. The switch is needed to isolate the motor from the drive during maintenance work on the drive.

Implementing the control of a contactor between drive and motor

Implementing the control of the output contactor depends on the motor control mode and stopping method selected.

When you select the vector motor control mode and the motor ramp stop mode, use this operation sequence to open the contactor:

1. Give a stop command to the drive.
2. Wait until the drive decelerates the motor to zero speed.
3. Open the contactor.

WARNING!
If vector motor control mode is in use, do not open the output contactor while the drive controls the motor. The motor control operates faster than the contactor, and tries to maintain the load current. This can cause damage to the contactor.

When you select the vector motor control mode and the motor coast stop mode, you can open the contactor immediately after the drive has received the stop command. This is the case also if you use the scalar motor control mode.

Protecting the contacts of relay outputs

Inductive loads (relays, contactors, motors) cause voltage transients when switched off.

It is highly recommended that inductive loads are equipped with noise attenuating circuits (varistors, RC filters [AC] or diodes [DC]) to minimize the EMC emission at switch-off. If not suppressed, the disturbances can connect capacitively or inductively to other conductors in the control cable and form a risk of malfunction in other parts of the system.

Install the protective component as close to the inductive load as possible. Do not install protective components at the relay outputs.

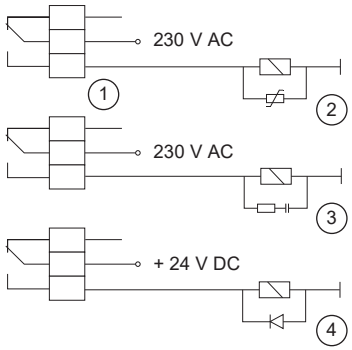

1	Relay output
2	Varistor
3	RC filter
4	Diode

6

Electrical installation – IEC

Contents of this chapter

This chapter describes how to:

- measure the insulation
- do the grounding system compatibility check
- change the EMC filter or ground-to-phase varistor connection
- connect the power and control cables
- install optional modules
- connect a PC.

Warnings

WARNING!
Obey the safety instructions of the drive. If you ignore them, injury or death, or damage to the equipment can occur. If you are not a qualified electrical professional, do not do installation or maintenance work.

Required tools

To do the electrical installation, you need the following tools:

- wire stripper
- screwdriver or wrench with a set of suitable bits. For motor cable terminals, the recommended screwdriver shaft length is 150 mm (5.9 in).

- short flat head screwdriver for the I/O terminals
- torque wrench
- multimeter and voltage detector
- personal protective equipment.

Measuring the insulation resistance

Measuring the insulation resistance of the drive

WARNING!
Do not do any voltage withstand or insulation resistance tests on any part of the drive as testing can damage the drive. Every drive has been tested for insulation between the main circuit and the chassis at the factory. Also, there are voltage-limiting circuits inside the drive which cut down the testing voltage automatically.

Measuring the insulation resistance of the input power cable

Before you connect the input power cable to the drive, measure its insulation resistance according to local regulations.

Measuring the insulation resistance of the motor and motor cable

WARNING!
Obey the safety instructions of the drive. If you ignore them, injury or death, or damage to the equipment can occur. If you are not a qualified electrical professional, do not do installation or maintenance work.

1. Do the steps in section *Electrical safety precautions (page 17)* before you start the work.
2. Make sure that the motor cable is disconnected from the drive output terminals.
3. Measure the insulation resistance between each phase conductor and the protective earth conductor. Use a measuring voltage of 1000 V DC. The insulation resistance of an ABB motor must be more than 100 Mohm (reference value at 25 °C [77 °F]). For the insulation resistance of other motors, refer to the manufacturer's instructions.

   Note: Moisture inside the motor reduces the insulation resistance. If you think that there is moisture in the motor, dry the motor and do the measurement again.

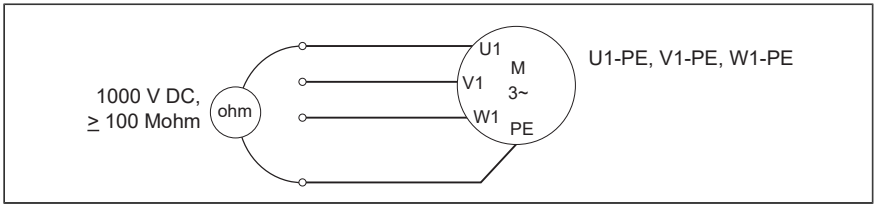

Measuring the insulation resistance of the brake resistor circuit

WARNING!
Obey the safety instructions of the drive. If you ignore them, injury or death, or damage to the equipment can occur. If you are not a qualified electrical professional, do not do installation or maintenance work.

1. Stop the drive and do the steps in section *Electrical safety precautions (page 17)* before you start the work.
2. Make sure that the resistor cable is connected to the resistor and disconnected from the drive output terminals.
3. At the drive end, connect the R+ and R- conductors of the resistor cable together. Measure the insulation resistance between the conductors and the PE conductor with a measuring voltage of 1000 V DC. The insulation resistance must be more than 1 Mohm.

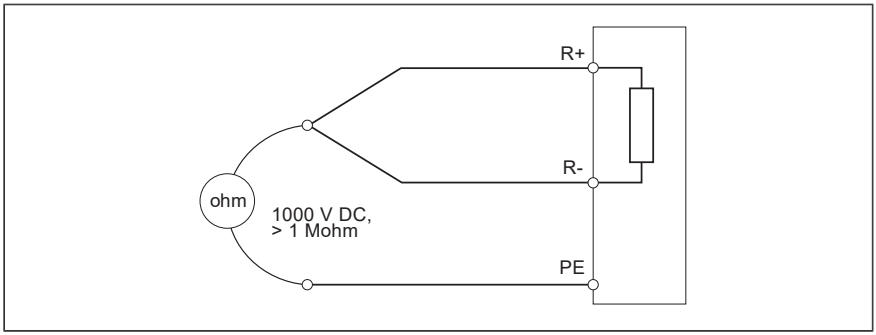

Grounding system compatibility check – IEC

EMC filter

Some drive types have an internal EMC filter as standard. You can install a drive that has the internal EMC filter connected to a symmetrically grounded TN-S system (center-grounded wye). For other systems, refer to *Compatibility of EMC filter and ground-to-phase varistor with the grounding system (page 68)*.

Note: 200 … 240 V drives with low filtering level (type ACS380-040x, EMC category C4) do not have an internal EMC filter.

Note: If you disconnect the EMC filter, the electromagnetic compatibility of the drive decreases.

WARNING!
Do not install a drive with the internal EMC filter connected to a grounding system that the EMC filter is not compatible with (for example, an IT system). The supply network becomes connected to ground potential through the internal EMC filter capacitors, which can cause danger or damage to the drive.

Ground-to-phase varistor

The drive has a ground-to-phase varistor circuit as standard. You can install a drive that has the varistor circuit connected to a symmetrically grounded TN-S system (center-grounded wye). For other systems, refer to *Compatibility of EMC filter and ground-to-phase varistor with the grounding system (page 68)*. In some product variants, the varistor circuit is disconnected at the factory.

WARNING!
Do not install the drive with the ground-to-phase varistor connected to a system that the varistor is not suitable for. If you do, the varistor circuit can be damaged.

Compatibility of EMC filter and ground-to-phase varistor with the grounding system

WARNING!
If you do not obey these instructions, injury to personnel or damage to the drive can occur.

A metal EMC screw is used to connect the internal EMC filter, and a metal VAR screw is used to connect the ground-to-phase varistor. The screws are installed at the factory. The material of the screws (plastic or metal) depends on the product variant. Before

you connect the drive to the input power, examine the screws and do the necessary actions shown in the table.

Screw label	Screw material	When to remove EMC screw or VAR screw		
		Symmetrically grounded TN-S systems, i.e, center-grounded wye (A)	**Corner-grounded delta (B1), mid-point-grounded delta (B2) and TT (D) systems**	**IT systems (un-grounded or high-resistance groun-ded) (C)**
EMC	Metal	Do not remove	Remove	Remove
	Plastic	Do not remove [1]	Do not remove	Do not remove
VAR	Metal	Do not remove	Do not remove	Remove
	Plastic	Do not remove	Do not remove	Do not remove

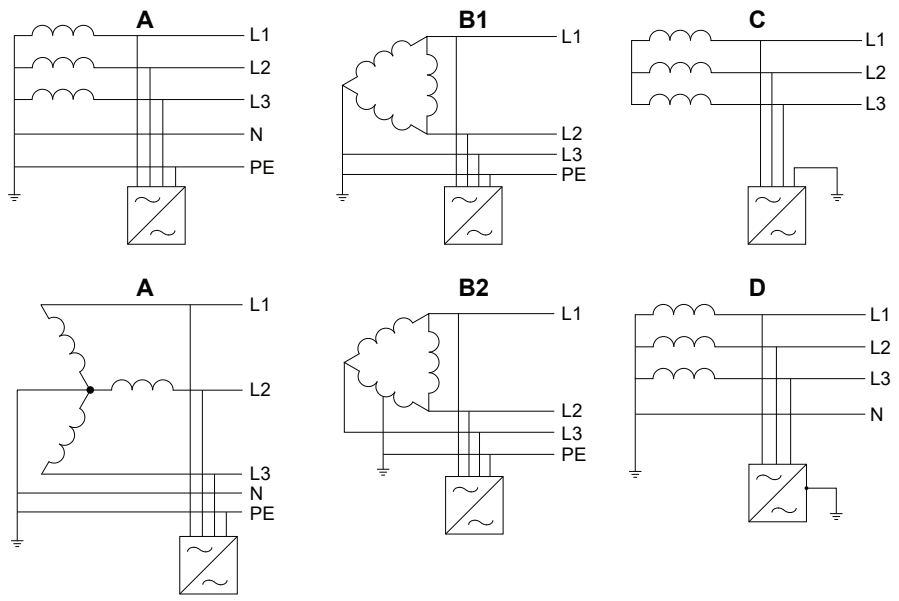

[1] Can install the metal screw included in the drive delivery to connect the internal EMC filter.

For the locations of the screws, refer to *Disconnecting the EMC filter or ground-to-phase varistor (page 70)*.

Disconnecting the EMC filter or ground-to-phase varistor

Before you continue, refer to *Compatibility of EMC filter and ground-to-phase varistor with the grounding system (page 68)*.

- To disconnect the EMC filter, remove the metal EMC screw.
- To disconnect the ground-to-phase varistor, remove the metal VAR screw.

EMC/VAR screw location

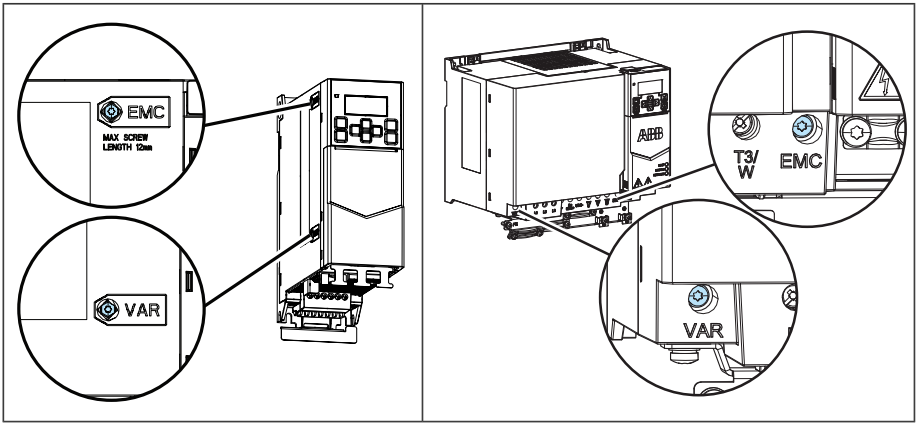

Guidelines for installing the drive to a TT system

You can install the drive to a TT system under these conditions:

1. There is a residual current device in the supply system
2. The internal EMC filter is disconnected. If the EMC filter is not disconnected, its leakage current will cause the residual current device to trip.

Note:

- ABB does not guarantee the EMC performance, because the internal EMC filter is disconnected.
- ABB does not guarantee the functioning of the ground leakage detector built inside the drive.
- In large systems the residual current device can trip without a real reason.

Identifying the grounding system of the electrical power network

WARNING!
Only a qualified electrical professional may do the work instructed in this section. Depending on the installation site, the work may even be categorized as live

working. Continue only if you are an electrical professional certified for the work. Obey the local regulations. If you ignore them, injury or death can occur.

To identify the grounding system, examine the supply transformer connection. See the applicable electrical diagrams of the building. If that is not possible, measure these voltages at the distribution board, and use the table to define the grounding system type.

1. input voltage line to line (U_{L-L})
2. input voltage line 1 to ground (U_{L1-G})
3. input voltage line 2 to ground (U_{L2-G})
4. input voltage line 3 to ground (U_{L3-G}).

The table below shows the line-to-ground voltages in relation to the line-to-line voltage for each grounding system.

U_{L-L}	U_{L1-G}	U_{L2-G}	U_{L3-G}	**Electrical power system type**
X	0.58·X	0.58·X	0.58·X	Symmetrically grounded TN system (TN-S system)
X	1.0·X	1.0·X	0	Corner-grounded delta system (nonsymmetrical)
X	0.866·X	0.5·X	0.5·X	Midpoint-grounded delta system (nonsymmetrical)
X	Varying level versus time	Varying level versus time	Varying level versus time	IT systems (ungrounded or high-resistance-grounded [>30 ohms]) nonsymmetrical
X	Varying level versus time	Varying level versus time	Varying level versus time	TT system (the protective earth connection for the consumer is provided by a local earth electrode, and there is another independently installed at the generator)

Connecting the power cables – IEC (shielded cables)

Connection diagram

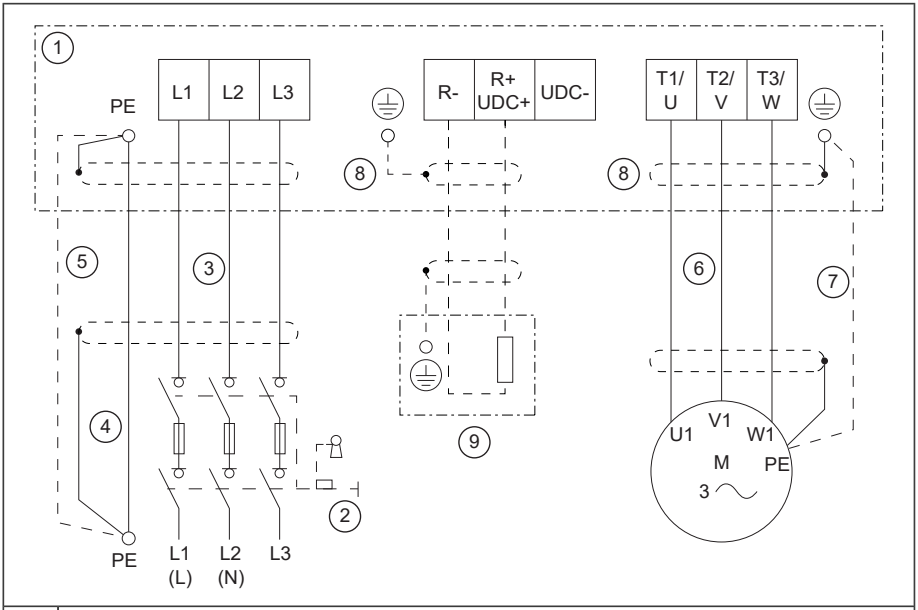

1	Drive
2	Disconnecting device
3	Input power cable
4	Two protective earth (ground) conductors. Drive safety standard IEC/EN 61800-5-1 requires two PE conductors for a fixed connection, if the cross-sectional area of the PE conductor is less than 10 mm^2 Cu or 16 mm^2 Al. For example, you can use the cable shield in addition to the fourth conductor.
5	Separate PE cable (line side). Use a separate grounding cable or a cable with a separate PE conductor for the line side, if the conductivity of the fourth conductor or shield does not meet the requirements for the PE conductor.
6	Motor cable **Note:** ABB recommends to use a symmetrical shielded cable (VFD cable) as the motor cable.
7	Separate PE cable (motor side). Use a separate grounding cable for the motor side, if the conductivity of the shield is not sufficient, or if there is no symmetrically constructed PE conductor in the cable.
8	360-degree grounding of the cable shield. Required for the motor cable and brake resistor cable (if used), recommended for the input power cable.
9	Brake resistor (optional)

Connection procedure

WARNING!
Obey the safety instructions of the drive. If you ignore them, injury or death, or damage to the equipment can occur. If you are not a qualified electrical professional, do not do installation or maintenance work.

Refer to *Terminal data for the power cables (page 147)* for the tightening torques.

1. Do the steps in section *Electrical safety precautions (page 17)* before you start the work.
2. Remove the screw on the drive front cover, then remove the front cover.

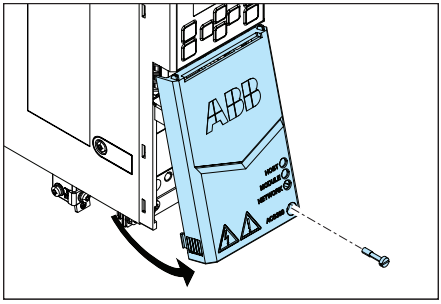

3. Attach the residual voltage warning sticker in the local language to the drive.
4. Strip the motor cable.
5. Ground the motor cable shield under the grounding clamp for 360-degree grounding.

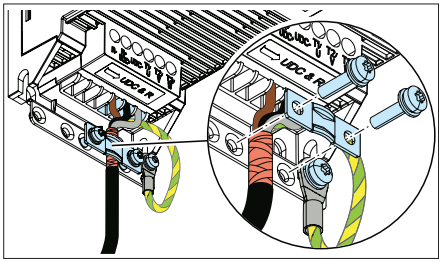

6. Twist the motor cable shield into a bundle, mark it with yellow-green insulation tape, install a cable lug, and connect it to the grounding terminal.
7. Connect the phase conductors of the motor cable to terminals T1/U, T2/V and T3/W.

8. If you use a brake resistor, connect the brake resistor cable to terminals R- and UDC+. Use shielded cable and ground the shield under the grounding clamp for 360-degree grounding.
9. Make sure that the R- and UDC+ terminal screws are tightened. Do this step also if you do not connect cables to the terminals.
10. Strip the input power cable.
11. If the input power cable has a shield, ground the shield under the clamp for 360-degree grounding. Twist the shield also into a bundle, mark it with yellow-green insulation tape, install a cable lug, and connect it to the grounding terminal.

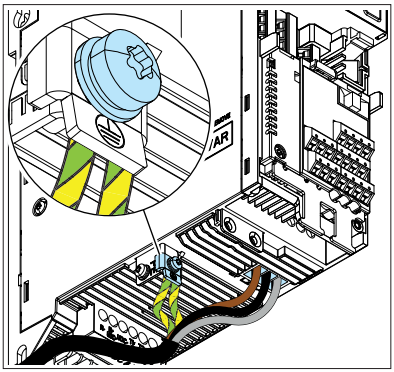

12. Connect the protective earth (ground) conductor(s) of the input power cable to the grounding terminal.
13. Connect the phase conductors of the input power cable to the drive as follows:
    - 1-phase drives: connect the phase and neutral conductors to terminals L1 and L2. For example, connect phase to L1 and neutral to L2.
    - 3-phase drives: connect the phase conductors to terminals L1, L2, and L3.
14. Mechanically attach all of the cables on the outside of the drive.

Connecting the control cables

Before you connect the control cables, make sure that all option modules are installed.

Default I/O connection diagram (ABB standard macro)

This connection diagram is valid for drives with the BMIO-01 I/O & Modbus extension module:

- Standard variant (ACS380-04x**S**)

- Configured variant (ACS380-04x**C**) with the BMIO-01 I/O & Modbus extension module (option +L538)

Connection	Term.	Description	1)
Digital I/O and relay output connections			
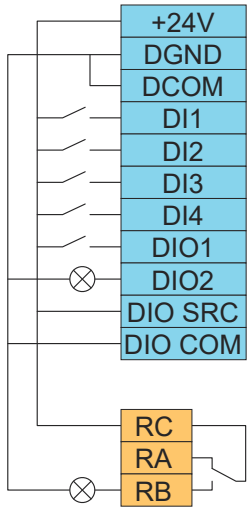	+24V	Aux. voltage output +24 V DC, max. 250 mA	×
	DGND	Aux. voltage output common	×
	DCOM	Digital input common	×
	DI1	Stop (0) / Start (1)	×
	DI2	Forward (0) / Reverse (1)	×
	DI3	Speed selection	
	DI4	Speed selection	
	DIO1	Digital input: Ramp set 1 (0) / Ramp set 2 (1)	
	DIO2	Digital output: Not ready (0) / Ready run (1)	
	DIO SRC	Digital output auxiliary voltage	
	DIO COM	Digital input/output common	
	RC	Relay output 1 No fault [Fault (-1)]	×
	RA		×
	RB		×
Analog inputs and outputs			
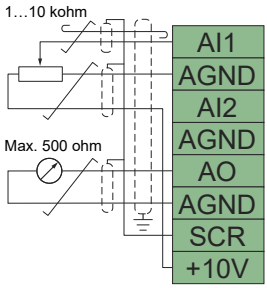	AI1	Output frequency/Speed reference (0 … 10 V)	
	AGND	Analog input circuit common	
	AI2	Not configured	
	AGND	Analog input circuit common	
	AO	Output frequency (0 … 20 mA)	
	AGND	Analog output circuit common	
	SCR	Signal cable shield (screen)	
	+10V	Reference voltage	
Safe torque off (STO)			
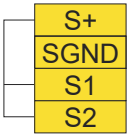	S+	Safe torque off function. Factory connection. Both circuits must be closed for the drive to start.	×
	SGND		×
	S1		×
	S2		×

Connection	Term.	Description	1)
EIA-485 Modbus RTU			
B+	B+	Embedded Modbus RTU (EIA-485)	
A-	A-		
BGND	BGND		
Shield	Shield		
	Termination & bias		

1) × = base unit, empty = BMIO-01 module

Fieldbus connection diagram

This connection diagram is valid for drives with a fieldbus extension module. The type code is ACS380-04xC followed by an option code that designates the extension module.

Connection	Term.	Description
Digital I/O and relay output connections		
+24V	+24V	Aux. voltage output +24 V DC, max. 250 mA
DGND	DGND	Aux. voltage output common
DCOM	DCOM	Digital input common
DI1	DI1	Fault reset (operates also through the fieldbus interface)
DI2	DI2	Not configured
RC	RC	Relay output 1 No fault [Fault (-1)]
RA	RA	
RB	RB	
Safe torque off (STO)		
S+	S+	Safe torque off function. Factory connection. Both circuits must be closed for the drive to start.
SGND	SGND	
S1	S1	
S2	S2	

Connection	Term.	Description
Fieldbus connection		
See the applicable fieldbus adapter manual.	Terminal block	+K451 FDNA-01, DeviceNet
	DSUB9	+K454 FPBA-01 Profibus DP
	DSUB9	+K457 FCAN-01 CANopen
	RJ45×2	+K469 FECA-01 EtherCAT
	RJ45×2	+K470 FEPL-02, Ethernet Powerlink
	RJ45×2	+K475 FENA-21 Ethernet/IP, Profinet, Modbus TCP
	RJ45×2	+K495 BCAN-11 CANopen interface

Control cable connection procedure

Do the connections according to the control macro (parameter *96.04*) used.

Keep the signal wire pairs twisted as near to the terminals as possible to prevent inductive coupling.

WARNING!
Obey the safety instructions of the drive. If you ignore them, injury or death, or damage to the equipment can occur. If you are not a qualified electrical professional, do not do installation or maintenance work.

1. Do the steps in section *Electrical safety precautions (page 17)* before you start the work.
2. Remove the screw on the drive front cover, then remove the front cover.
3. Strip a part of the outer shield of the control cable for grounding.
4. Use a cable tie to ground the outer shield to the grounding tab. For 360-degree grounding, use metallic cable ties.
5. Strip the control cable conductors.
6. Connect the conductors to the correct control terminals. Torque the terminal connections to 0.5 … 0.6 N·m (4.4 … 5.3 lbf·in).
7. Connect the shields and grounding wires to the SCR terminal. Torque the terminal connection to 0.5 … 0.6 N·m (4.4 … 5.3 lbf·in).
8. Mechanically attach the control cables on the outside of the drive.

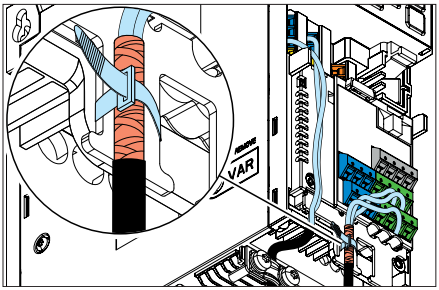

Additional information on the control connections

Embedded EIA-485 fieldbus connection

The EIA-485 network uses shielded, twisted-pair cable with a characteristic impedance of 100 … 130 ohm for data signaling. The distributed capacitance between conductors is less than 100 pF per meter (30 pF per foot). Distributed capacitance between conductors and shield is less than 200 pF per meter (60 pF per foot). Foil or braided shields are acceptable.

Connect the cable to the EIA-485 terminal on the BMIO-01 I/O module. Obey these wiring instructions:

- Attach the cable shields together at each drive, but do not connect them to the drive.
- Connect the cable shields only to the grounding terminal in the automation controller.
- Connect the signal ground (BGND) conductor to the signal ground reference terminal in the automation controller. If the automation controller does not have a signal ground reference terminal, connect the signal ground conductor to the cable shield through a 100 ohm resistor, preferably near the automation controller.

Connection examples are shown below.

With signal ground reference terminal

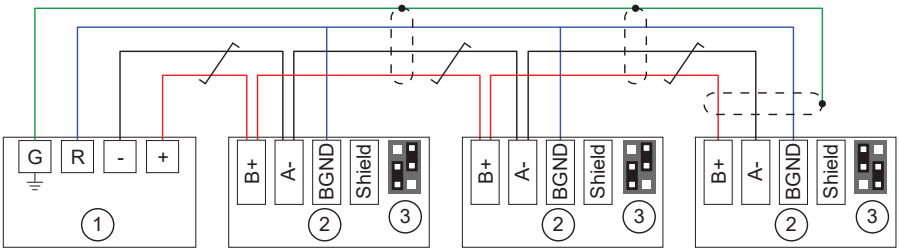

Without signal ground reference terminal

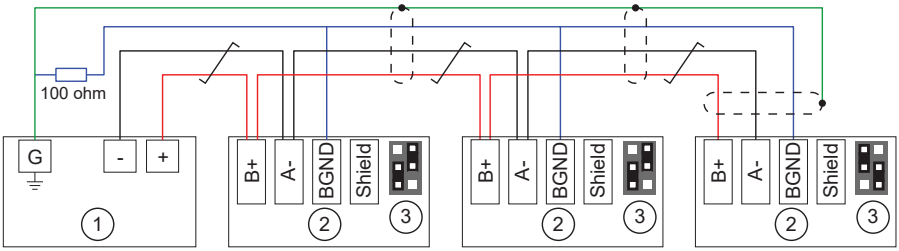

1	Automation controller
2	Drive
3	Termination jumpers. The devices at the ends of the fieldbus must have termination on. All other devices must have termination off.

PNP configuration for digital inputs

Internal and external +24 V power supply connections for PNP (source) configuration are shown in the figures below.

WARNING!
If you connect DIO1 or DIO2 as shown in the figures below, make sure that they are configured as inputs. If they are configured as outputs, it can cause damage to the equipment.

Internal +24 V power supply	External +24 V power supply
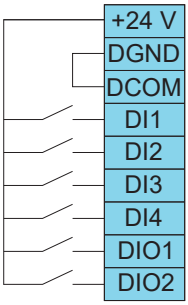	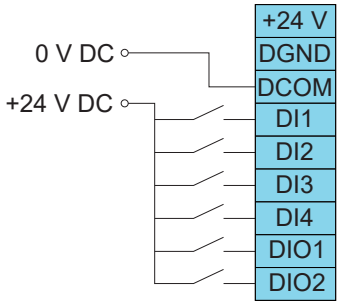

NPN configuration for digital inputs

Internal and external +24 V power supply connections for NPN (sink) configuration are shown in the figures below.

WARNING!
If you connect DIO1 or DIO2 as shown in the figures below, make sure that they are configured as inputs. If they are configured as outputs, it can cause damage to the equipment.

Internal +24 V power supply	External +24 V power supply
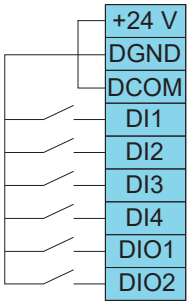	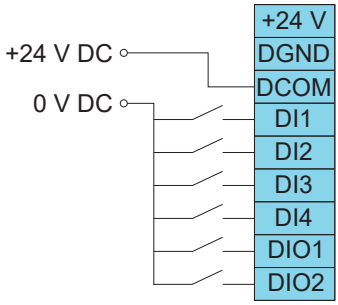

Connection examples of two-wire and three-wire sensors

The figures give examples of connections for a two-wire or three-wire sensor/transmitter that is supplied by the auxiliary voltage output of the drive.

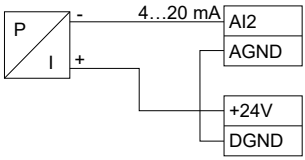

AI2	Process actual value measurement or reference, 0(4) … 20 mA, R_{in} = 137 ohm. If the sensor power supply comes through its current output circuit, use 4 … 20 mA signal, not 0 … 20 mA.
AGND	
+24V	Auxiliary voltage output, non-isolated, +24 V DC, max. 250 mA
DGND	

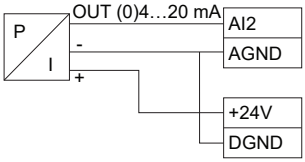

AI2	Process actual value measurement or reference, 0(4)…20 mA, R_{in} = 137 ohm
AGND	
+24V	Auxiliary voltage output, non-isolated, +24 V DC, max. 250 mA
DGND	

AI and AO (or AI, DI and +10 V) as PTC motor temperature sensor interface

WARNING!
IEC 61800-5-1 requires double or reinforced insulation between live parts and accessible parts when:

- the accessible parts are not conductive, or
- the accessible parts are conductive, but not connected to the protective earth.

Obey this requirement when you plan the connection of the motor temperature sensor to the drive.

If the motor temperature sensor has a reinforced insulation vs. the motor windings, you can connect it directly to the drive IO interface. This section shows two connection alternatives for the direct I/O connection. If the sensor does not have reinforced insulation, you must use another type of connection to fulfill the safety requirements. See *Implementing a motor temperature sensor connection (page 61)*.

See the firmware manual for information on the related Motor thermal protection function, and the required parameter settings.

PTC connection 1

1…3 PTC sensors can be connected in series to an analog input and an analog output. The analog output feeds a constant excitation current of 1.6 mA through the sensor. The sensor resistance increases as the motor temperature rises, as does the voltage over the sensor. The temperature measurement function calculates the resistance of the sensor and generates an indication if overtemperature is detected. Leave the sensor end of the cable shield unconnected.

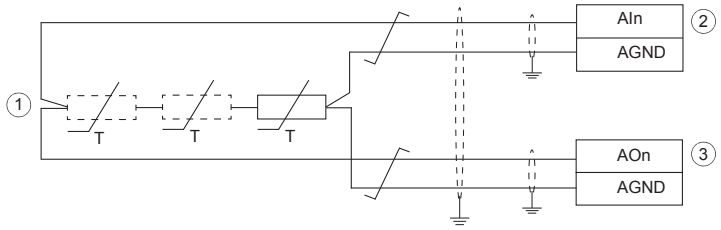

1	1…3 PTC sensors
2	Analog input. Set the analog input type to V (volt) in parameter group *12 Standard AI*. Define the temperature sensor type, signal source, etc. with parameters *35.11…35.24*. For the sensor type, select: *PTC analog I/O*.
3	Analog output. Select the *Excitation mode* for the analog output in parameter group *13 Standard AO*.

PTC connection 2

If no analog output is available for the PTC connection, it is possible to use a voltage divider connection. 1…3 PTC sensors are connected in series with 10 V reference and digital and analog inputs. The voltage over the digital input internal resistance varies depending on the PTC resistance. The temperature measurement function reads the digital input voltage through the analog input and calculates the PTC resistance.

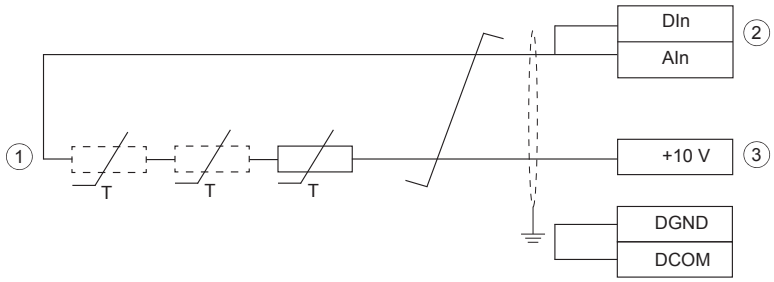

1	1…3 PTC sensors
2	Digital input and analog input. Set the analog input type to V (volt) in parameter group *12 Standard AI*. Define the temperature sensor type, signal source, etc. with parameters *35.11…35.24*. For the sensor type, select: *PTC AI/DI Voltage Divider tree*. Make sure that the digital input is not configured to any other use by parameters.
3	10 V reference voltage

AI1 and AI2 as Pt100, Pt1000, Ni1000, KTY83 and KTY84 sensor inputs

WARNING!
IEC 61800-5-1 requires double or reinforced insulation between live parts and accessible parts when:

- the accessible parts are not conductive, or
- the accessible parts are conductive, but not connected to the protective earth.

Obey this requirement when you plan the connection of the motor temperature sensor to the drive.

If the motor temperature sensor has a reinforced insulation vs. the motor windings, you can connect it directly to the drive IO interface. This section shows the connection. If the sensor has no reinforced insulation, you must use another type of connection to fulfill the safety requirements. See *Implementing a motor temperature sensor connection (page 61)*.

You can connect temperature measurement sensors (one, two or three Pt100 sensors; one, two or three Pt1000 sensors; or one Ni1000, KTY83 or KTY84) between an analog input and output as shown below. Leave the sensor end of the cable shield unconnected.

See the firmware manual for information on the related Motor thermal protection function.

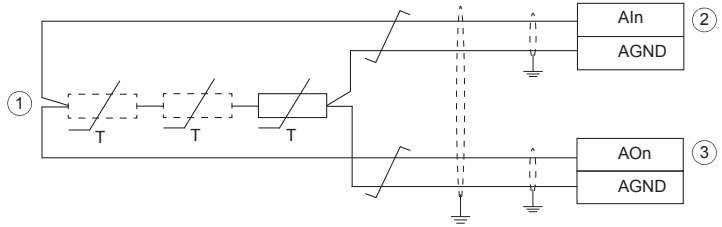

1	1…3 × (Pt100 or Pt1000) or 1 × (Ni1000 or KTY83 or KTY84)
2	Analog input. Set the analog input type to V (volt) in parameter group *12 Standard AI*. Define the temperature sensor type, signal source, etc. with parameters *35.11…35.24*. Set the analog input type to V (volt) in parameter group *12 Standard AI*.
3	Analog output. Select the *Excitation mode* for the analog output in parameter group *13 Standard AO*.

Safe torque off

For the drive to start, both STO connections (S+ to S1 and S+ to S2) must be closed. By default, the terminal block has jumpers to close the circuit. Remove the jumpers before connecting external Safe torque off circuitry to the drive. See chapter *The Safe torque off function*.

Auxiliary voltage connection

The drive has 24 V DC (±10%) auxiliary power supply terminals both on the base unit and on the BMIO-01 module. You can use them:

- to supply auxiliary power from the drive to external control circuits or option modules
- to supply external auxiliary power to the drive to keep the control and cooling in operation if there is a power outage.

See the technical data for the specifications for the auxiliary power supply terminals (input/output).

To supply power to external control circuits or option modules:

1. Connect the load either to the auxiliary power output on the base unit, or on the BMIO-01 module (+24V and DGND terminals).
2. Make sure that you do not exceed the load capacity of the output, or the sum load capacity of both outputs.

To connect an external auxiliary power supply to the drive:

1. Install a BAPO-01 power extension module to the drive. See *Installing options (page 86)*.
2. Connect an external power supply to the +24V and DGND terminals of the base unit.

For more information on the BAPO-01 module, see *BAPO-01 auxiliary power extension module (page 227)*.

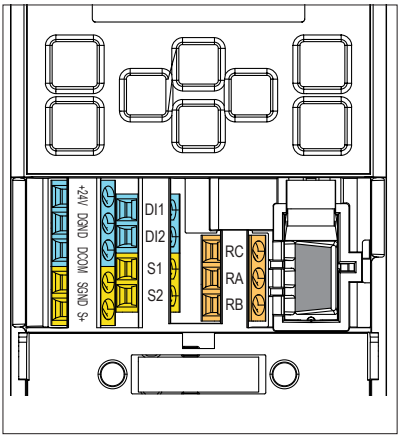

Connecting a PC

To connect a PC to the drive, there are two alternatives:

- Use an ACS-AP-I/S/W assistant control panel as a converter. Use a USB type A – type Mini-B cable. The maximum permitted length of the cable is 3 m (9.8 ft).
- Use a USB to RJ45 converter. You can order it from ABB (BCBL-01, 3AXD50000032449). Connect the cable to the Panel and PC tool port (RJ45).

For information on the Drive composer PC tool, refer to *Drive composer PC tool user's manual* (3AUA0000094606 [English]).

You can use the CCA-01 cold configuration tool to download software and change drive parameters without connecting the drive to the input power. The CCA-01 does not operate if the drive is powered.

Installing options

The drive has two option module slots:

- Front option: Communication module slot under the front cover.
- Side option: Multifunction extension module slot on the side of the drive.

Refer also to the applicable fieldbus module manual for the installation instructions. For other option modules, refer to:

- *BTAC-02 pulse encoder interface module (page 205)*
- *BREL-01 relay output extension module (page 221)*
- *BAPO-01 auxiliary power extension module (page 227)*
- *BIO-01 I/O extension module (page 231)*.

Installing a front option

WARNING!
Obey the safety instructions of the drive. If you ignore them, injury or death, or damage to the equipment can occur. If you are not a qualified electrical professional, do not do installation or maintenance work.

1. Do the steps in section *Electrical safety precautions (page 17)* before you start the work.
2. Remove the screw on the drive front cover, then remove the front cover.
3. If the option module has a locking tab, pull it up.

4. Carefully align the option module with the option module slot and push it into position.

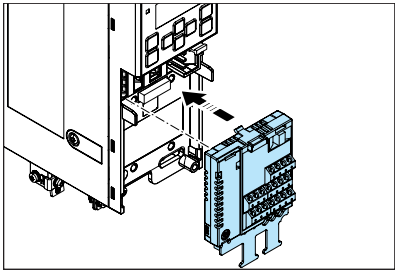

5. Torque the screw to 0.5 N·m (4.4 lbf·in).

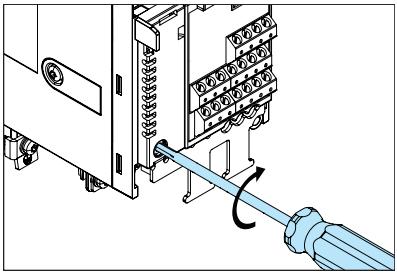

6. If the option module has a locking tab, push it down until it locks.

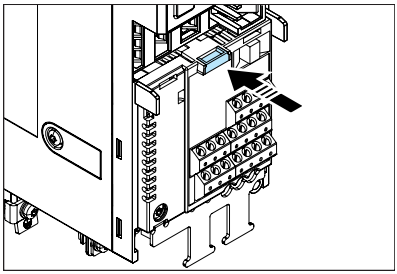

7. Connect the control cables. See the control cable connection instructions.

Note: If you have the BIO-01 option module, you can add one additional fieldbus module on top of it. Replace the drive front cover with the high cover that comes with the BIO-01 module.

Installing a side option

WARNING!
Obey the safety instructions of the drive. If you ignore them, injury or death, or damage to the equipment can occur. If you are not a qualified electrical professional, do not do installation or maintenance work.

1. Do the steps in section *Electrical safety precautions (page 17)* before you start the work.
2. Remove the two screws from the front-most grounding clamp at the bottom of the drive.
3. Carefully align the side option with the connectors on the right side of the drive.
4. Fully push the option module into position.
5. Torque the screw on the option module to 1 N·m (8.8 lbf·in).
6. Attach the grounding bar to the bottom of the side option and to the front ground tab on the drive. Torque the screws to 1 N·m (8.8 lbf·in).
7. Connect the control cables. See the control cable connection instructions.

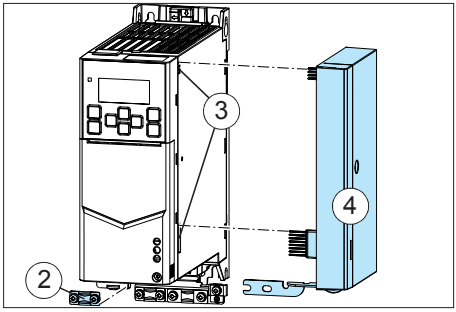

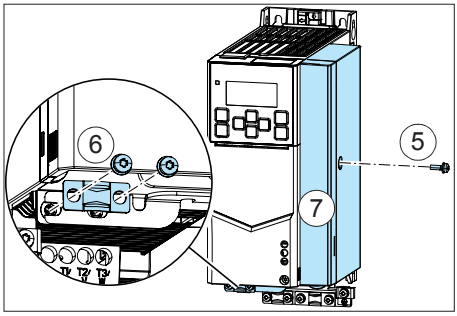

7

Electrical installation – North America

Contents of this chapter

This chapter describes how to:

- measure the insulation
- do the grounding system compatibility check
- change the EMC filter or ground-to-phase varistor connection
- connect the power and control cables
- install optional modules
- connect a PC.

Warnings

WARNING!
Obey the safety instructions of the drive. If you ignore them, injury or death, or damage to the equipment can occur. If you are not a qualified electrical professional, do not do installation or maintenance work.

Required tools

To do the electrical installation, you need the following tools:

- wire stripper

- screwdriver or wrench with a set of suitable bits. For motor cable terminals, the recommended screwdriver shaft length is 150 mm (5.9 in).
- short flat head screwdriver for the I/O terminals
- torque wrench
- multimeter and voltage detector
- personal protective equipment.

Measuring the insulation resistance

Measuring the insulation resistance of the drive

WARNING!
Do not do any voltage withstand or insulation resistance tests on any part of the drive as testing can damage the drive. Every drive has been tested for insulation between the main circuit and the chassis at the factory. Also, there are voltage-limiting circuits inside the drive which cut down the testing voltage automatically.

Measuring the insulation resistance of the input power cable

Before you connect the input power cable to the drive, measure its insulation resistance according to local regulations.

Measuring the insulation resistance of the motor and motor cable

WARNING!
Obey the safety instructions of the drive. If you ignore them, injury or death, or damage to the equipment can occur. If you are not a qualified electrical professional, do not do installation or maintenance work.

1. Do the steps in section *Electrical safety precautions (page 17)* before you start the work.
2. Make sure that the motor cable is disconnected from the drive output terminals.
3. Measure the insulation resistance between each phase conductor and the protective earth conductor. Use a measuring voltage of 1000 V DC. The insulation resistance of an ABB motor must be more than 100 Mohm (reference value at 25 °C [77 °F]). For the insulation resistance of other motors, refer to the manufacturer's instructions.

   Note: Moisture inside the motor reduces the insulation resistance. If you think that there is moisture in the motor, dry the motor and do the measurement again.

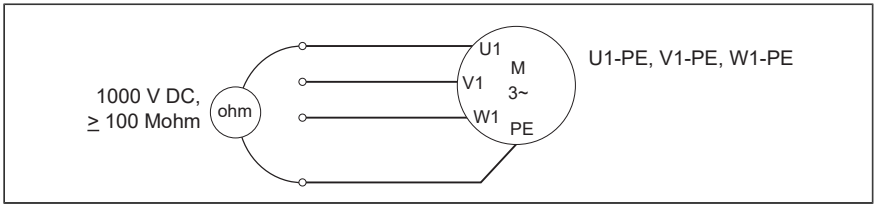

Measuring the insulation resistance of the brake resistor circuit

WARNING!
Obey the safety instructions of the drive. If you ignore them, injury or death, or damage to the equipment can occur. If you are not a qualified electrical professional, do not do installation or maintenance work.

1. Stop the drive and do the steps in section *Electrical safety precautions (page 17)* before you start the work.
2. Make sure that the resistor cable is connected to the resistor and disconnected from the drive output terminals.
3. At the drive end, connect the R+ and R- conductors of the resistor cable together. Measure the insulation resistance between the conductors and the PE conductor with a measuring voltage of 1000 V DC. The insulation resistance must be more than 1 Mohm.

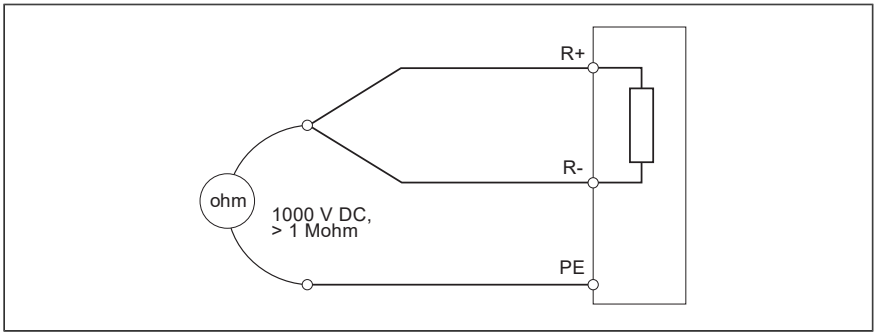

Grounding system compatibility check – North America

This section is applicable to North American installations.

EMC filter

Some drive types have an internal EMC filter as standard. In the drives sold in North America, the filter is disconnected by default. The filter is typically not necessary in North American installations.

If you are concerned with EMC issues, and install the drive to a symmetrically grounded TN-S system (center-grounded wye), you can connect the internal EMC filter. See *Disconnecting the ground-to-phase varistor, or connecting the EMC filter (page 94)*.

Note: 200 … 240 V drives with low filtering level (type ACS380-040x, EMC category C4) do not have an internal EMC filter.

Note: When the internal EMC filter is disconnected, the electromagnetic compatibility of the drive is decreased.

WARNING!
Do not install a drive with the internal EMC filter connected to a grounding system that the EMC filter is not compatible with (for example, an IT system). The supply network becomes connected to ground potential through the internal EMC filter capacitors, which can cause danger or damage to the drive.

Ground-to-phase varistor

The drive has a ground-to-phase varistor circuit as standard. You can install a drive that has the varistor circuit connected to a symmetrically grounded TN-S system (center-grounded wye). For other systems, refer to *Compatibility of EMC filter and ground-to-phase varistor with the grounding system (page 92)*. In some product variants, the varistor circuit is disconnected at the factory.

WARNING!
Do not install the drive with the ground-to-phase varistor connected to a system that the varistor is not suitable for. If you do, the varistor circuit can be damaged.

Compatibility of EMC filter and ground-to-phase varistor with the grounding system

WARNING!
If you do not obey these instructions, injury to personnel or damage to the drive can occur.

A metal EMC screw is used to connect the internal EMC filter, and a metal VAR screw is used to connect the ground-to-phase varistor. The screws are installed at the factory. The material of the screws (plastic or metal) depends on the product variant. Before

you connect the drive to the input power, examine the screws and do the necessary actions shown in the table.

Screw label	Screw material	When to remove EMC screw or VAR screw		
		Symmetrically grounded TN-S systems, i.e, center-grounded wye (A)	**Corner-grounded delta (B1), mid-point-grounded delta (B2) and TT (D) systems**	**IT systems (un-grounded or high-resistance groun-ded) (C)**
EMC	Metal	Do not remove	Remove	Remove
	Plastic	Do not remove [1]	Do not remove	Do not remove
VAR	Metal	Do not remove	Do not remove	Remove
	Plastic	Do not remove	Do not remove	Do not remove

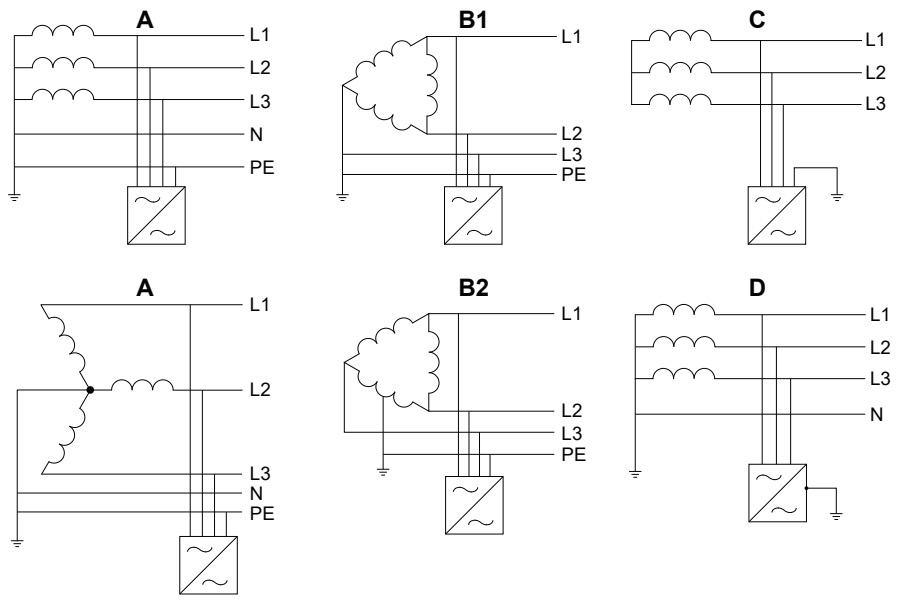

[1] Can install the metal screw included in the drive delivery to connect the internal EMC filter.

For the locations of the screws, refer to *Disconnecting the ground-to-phase varistor, or connecting the EMC filter*.

Disconnecting the ground-to-phase varistor, or connecting the EMC filter

Before you continue, refer to *Compatibility of EMC filter and ground-to-phase varistor with the grounding system (page 92)*.

- To disconnect the ground-to-phase varistor, remove the metal VAR screw.
- To connect the EMC filter, remove the plastic EMC screw, and replace it with the metal screw included in the drive delivery.

EMC/VAR screw location

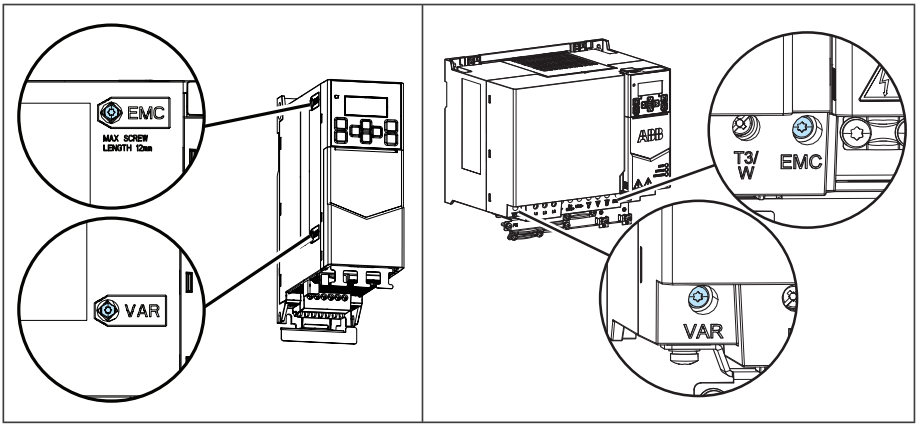

Guidelines for installing the drive to a TT system

You can install the drive to a TT system under these conditions:

1. There is a residual current device in the supply system
2. The internal EMC filter is disconnected. If the EMC filter is not disconnected, its leakage current will cause the residual current device to trip.

Note:

- ABB does not guarantee the EMC performance, because the internal EMC filter is disconnected.
- ABB does not guarantee the functioning of the ground leakage detector built inside the drive.
- In large systems the residual current device can trip without a real reason.

Identifying the grounding system of the electrical power network

WARNING!
Only a qualified electrical professional may do the work instructed in this section. Depending on the installation site, the work may even be categorized as live working. Continue only if you are an electrical professional certified for the work. Obey the local regulations. If you ignore them, injury or death can occur.

To identify the grounding system, examine the supply transformer connection. See the applicable electrical diagrams of the building. If that is not possible, measure these voltages at the distribution board, and use the table to define the grounding system type.

1. input voltage line to line (U_{L-L})
2. input voltage line 1 to ground (U_{L1-G})
3. input voltage line 2 to ground (U_{L2-G})
4. input voltage line 3 to ground (U_{L3-G}).

The table below shows the line-to-ground voltages in relation to the line-to-line voltage for each grounding system.

U_{L-L}	U_{L1-G}	U_{L2-G}	U_{L3-G}	Electrical power system type
X	0.58·X	0.58·X	0.58·X	Symmetrically grounded TN system (TN-S system)
X	1.0·X	1.0·X	0	Corner-grounded delta system (nonsymmetrical)
X	0.866·X	0.5·X	0.5·X	Midpoint-grounded delta system (nonsymmetrical)
X	Varying level versus time	Varying level versus time	Varying level versus time	IT systems (ungrounded or high-resistance-grounded [>30 ohms]) nonsymmetrical
X	Varying level versus time	Varying level versus time	Varying level versus time	TT system (the protective earth connection for the consumer is provided by a local earth electrode, and there is another independently installed at the generator)

Connecting the power cables – North America (wiring in conduits)

Use insulated wires suitable for installation in electrical conduits. See the National Electric Code and local ordinances.

Connection diagram

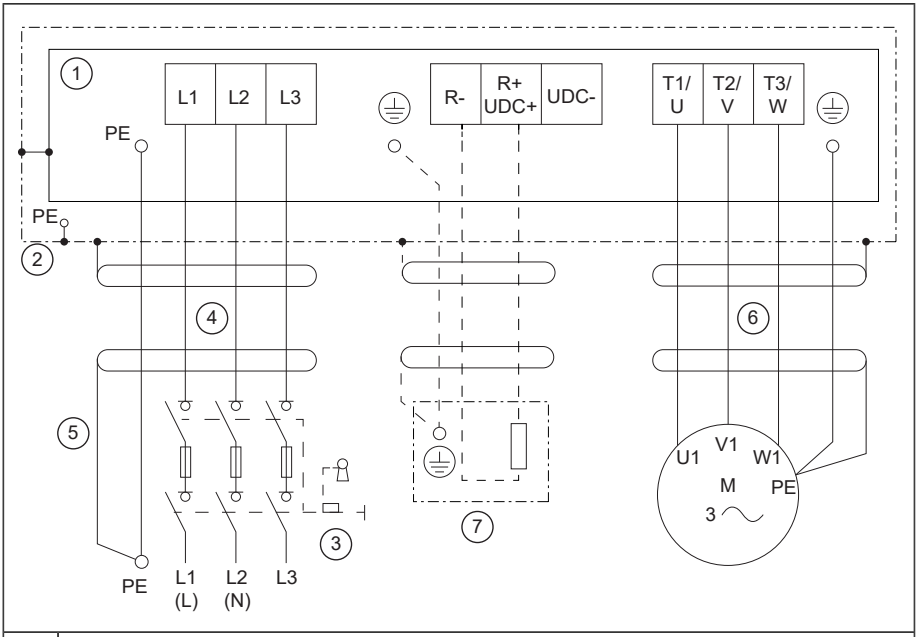

1	Drive
2	Drive enclosure
3	Supply disconnecting device and fuses
4	Input power wiring
5	Protective earth (ground) conductor(s)
6	Motor wiring **Note:** ABB recommends to use a symmetrical shielded cable (VFD cable) as the motor cable.
7	Brake resistor (optional)

Connection procedure

WARNING!
Obey the safety instructions of the drive. If you ignore them, injury or death, or damage to the equipment can occur. If you are not a qualified electrical professional, do not do installation or maintenance work.

Refer to *Terminal data for the power cables (page 147)* for the tightening torques.

1. Do the steps in section *Electrical safety precautions (page 17)* before you start the work.
2. Install the conduits, and attach them to the cable entry plate of the enclosure that the drive is installed in.
3. Make sure that the conduit is correctly grounded at the cable entry.
4. Strip the conductor ends and pull the conductors through the conduits.
5. Remove the screw on the drive front cover, then remove the front cover.

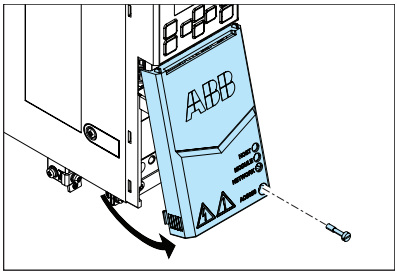

6. Attach the residual voltage warning sticker in the local language to the drive.
7. Connect the protective earth (ground) conductor of the motor wiring to the grounding terminal.

8. Connect the phase conductors of the motor wiring to terminals T1/U, T2/V and T3/W.

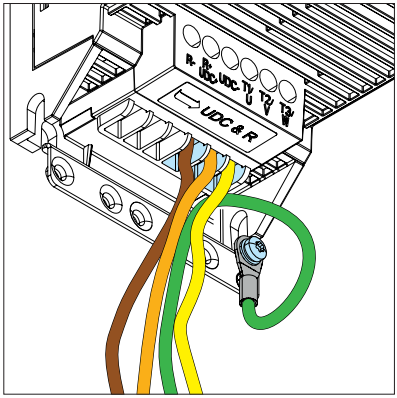

9. If you use a brake resistor, connect the brake resistor conductors to terminals R- and UDC+.
10. Make sure that the R- and UDC+ terminal screws are tightened. Do this step also if you do not connect cables to the terminals.
11. Connect the protective earth (ground) conductor(s) of the input power wiring to the grounding terminal.
12. Connect the phase conductors of the input power wiring to the drive as follows:
    - 1-phase drives: connect the phase and neutral conductors to terminals L1 and L2. For example, connect phase to L1 and neutral to L2.
    - 3-phase drives: connect the phase conductors to terminals L1, L2, and L3.

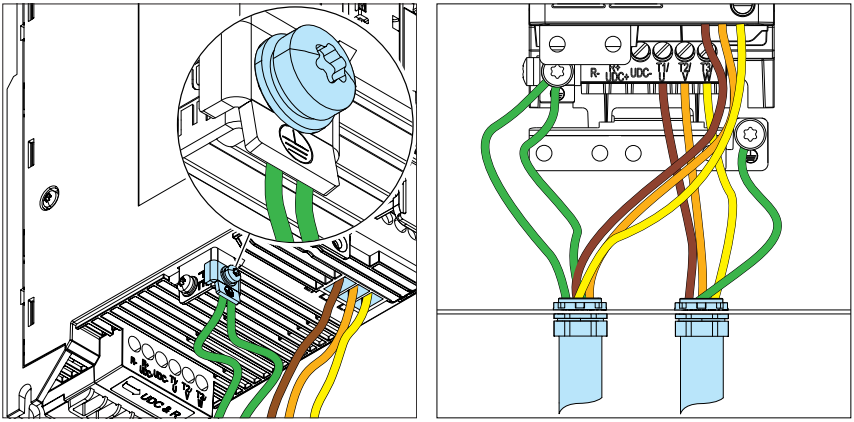

13. Connect the other ends of the conductors.

Connecting the control cables

Before you connect the control cables, make sure that all option modules are installed.

Default I/O connection diagram (ABB standard macro)

This connection diagram is valid for drives with the BMIO-01 I/O & Modbus extension module:

- Standard variant (ACS380-04x**S**)
- Configured variant (ACS380-04x**C**) with the BMIO-01 I/O & Modbus extension module (option +L538)

Connection	Term.	Description	1)
Digital I/O and relay output connections			
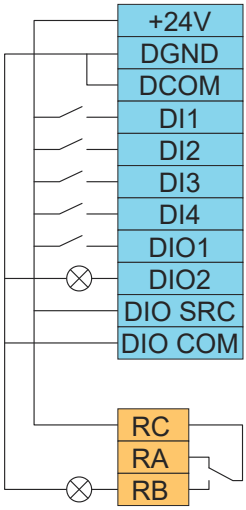	+24V	Aux. voltage output +24 V DC, max. 250 mA	×
	DGND	Aux. voltage output common	×
	DCOM	Digital input common	×
	DI1	Stop (0) / Start (1)	×
	DI2	Forward (0) / Reverse (1)	×
	DI3	Speed selection	
	DI4	Speed selection	
	DIO1	Digital input: Ramp set 1 (0) / Ramp set 2 (1)	
	DIO2	Digital output: Not ready (0) / Ready run (1)	
	DIO SRC	Digital output auxiliary voltage	
	DIO COM	Digital input/output common	
	RC	Relay output 1 No fault [Fault (-1)]	×
	RA		×
	RB		×
Analog inputs and outputs			
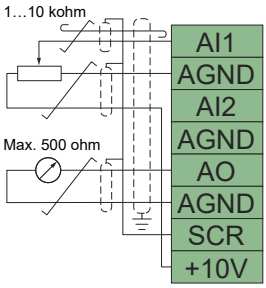	AI1	Output frequency/Speed reference (0 … 10 V)	
	AGND	Analog input circuit common	
	AI2	Not configured	
	AGND	Analog input circuit common	
	AO	Output frequency (0 … 20 mA)	
	AGND	Analog output circuit common	
	SCR	Signal cable shield (screen)	
	+10V	Reference voltage	
Safe torque off (STO)			
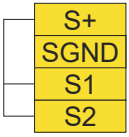	S+	Safe torque off function. Factory connection. Both circuits must be closed for the drive to start.	×
	SGND		×
	S1		×
	S2		×

Connection	Term.	Description	1)
EIA-485 Modbus RTU			
B+	B+	Embedded Modbus RTU (EIA-485)	
A-	A-		
BGND	BGND		
Shield	Shield		
	Termination & bias		

1) × = base unit, empty = BMIO-01 module

Fieldbus connection diagram

This connection diagram is valid for drives with a fieldbus extension module. The type code is ACS380-04xC followed by an option code that designates the extension module.

Connection	Term.	Description
Digital I/O and relay output connections		
+24V	+24V	Aux. voltage output +24 V DC, max. 250 mA
DGND	DGND	Aux. voltage output common
DCOM	DCOM	Digital input common
DI1	DI1	Fault reset (operates also through the fieldbus interface)
DI2	DI2	Not configured
RC	RC	Relay output 1 No fault [Fault (-1)]
RA	RA	
RB	RB	
Safe torque off (STO)		
S+	S+	Safe torque off function. Factory connection. Both circuits must be closed for the drive to start.
SGND	SGND	
S1	S1	
S2	S2	

Connection	Term.	Description
Fieldbus connection		
See the applicable fieldbus adapter manual.	Terminal block	+K451 FDNA-01, DeviceNet
	DSUB9	+K454 FPBA-01 Profibus DP
	DSUB9	+K457 FCAN-01 CANopen
	RJ45×2	+K469 FECA-01 EtherCAT
	RJ45×2	+K470 FEPL-02, Ethernet Powerlink
	RJ45×2	+K475 FENA-21 Ethernet/IP, Profinet, Modbus TCP
	RJ45×2	+K495 BCAN-11 CANopen interface

Control cable connection procedure

Do the connections according to the control macro (parameter *96.04*) used.

Keep the signal wire pairs twisted as near to the terminals as possible to prevent inductive coupling.

WARNING!
Obey the safety instructions of the drive. If you ignore them, injury or death, or damage to the equipment can occur. If you are not a qualified electrical professional, do not do installation or maintenance work.

1. Do the steps in section *Electrical safety precautions (page 17)* before you start the work.
2. Remove the screw on the drive front cover, then remove the front cover.
3. Strip a part of the outer shield of the control cable for grounding.
4. Use a cable tie to ground the outer shield to the grounding tab. For 360-degree grounding, use metallic cable ties.
5. Strip the control cable conductors.
6. Connect the conductors to the correct control terminals. Torque the terminal connections to 0.5 … 0.6 N·m (4.4 … 5.3 lbf·in).
7. Connect the shields and grounding wires to the SCR terminal. Torque the terminal connection to 0.5 … 0.6 N·m (4.4 … 5.3 lbf·in).
8. Mechanically attach the control cables on the outside of the drive.

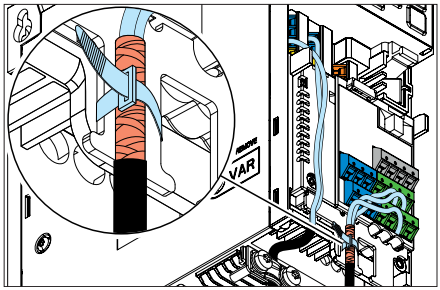

Additional information on the control connections

Embedded EIA-485 fieldbus connection

The EIA-485 network uses shielded, twisted-pair cable with a characteristic impedance of 100 … 130 ohm for data signaling. The distributed capacitance between conductors is less than 100 pF per meter (30 pF per foot). Distributed capacitance between conductors and shield is less than 200 pF per meter (60 pF per foot). Foil or braided shields are acceptable.

Connect the cable to the EIA-485 terminal on the BMIO-01 I/O module. Obey these wiring instructions:

- Attach the cable shields together at each drive, but do not connect them to the drive.
- Connect the cable shields only to the grounding terminal in the automation controller.
- Connect the signal ground (BGND) conductor to the signal ground reference terminal in the automation controller. If the automation controller does not have a signal ground reference terminal, connect the signal ground conductor to the cable shield through a 100 ohm resistor, preferably near the automation controller.

Connection examples are shown below.

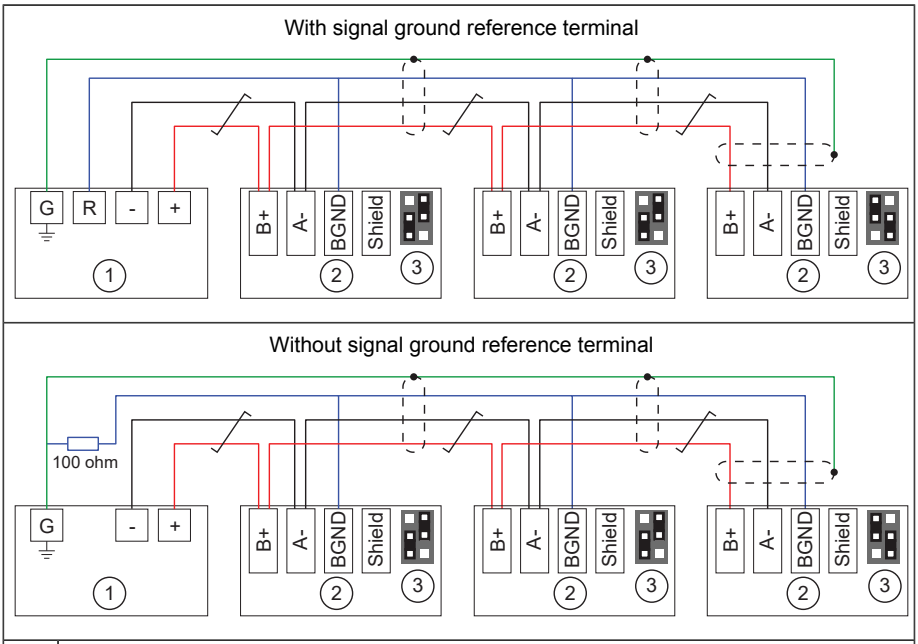

1	Automation controller
2	Drive
3	Termination jumpers. The devices at the ends of the fieldbus must have termination on. All other devices must have termination off.

PNP configuration for digital inputs

Internal and external +24 V power supply connections for PNP (source) configuration are shown in the figures below.

WARNING!
If you connect DIO1 or DIO2 as shown in the figures below, make sure that they are configured as inputs. If they are configured as outputs, it can cause damage to the equipment.

Internal +24 V power supply	External +24 V power supply
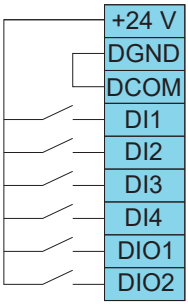	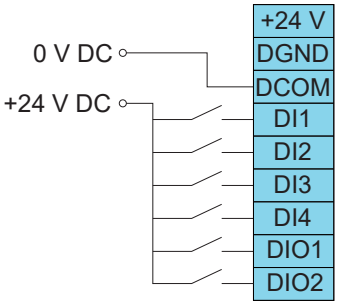

NPN configuration for digital inputs

Internal and external +24 V power supply connections for NPN (sink) configuration are shown in the figures below.

WARNING!
If you connect DIO1 or DIO2 as shown in the figures below, make sure that they are configured as inputs. If they are configured as outputs, it can cause damage to the equipment.

Internal +24 V power supply	External +24 V power supply
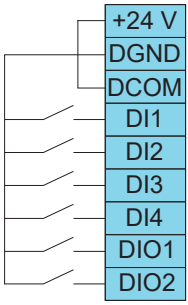	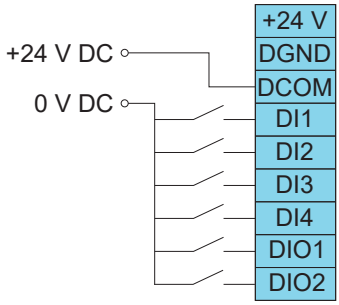

Connection examples of two-wire and three-wire sensors

The figures give examples of connections for a two-wire or three-wire sensor/transmitter that is supplied by the auxiliary voltage output of the drive.

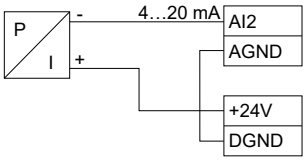

AI2 AGND	Process actual value measurement or reference, 0(4) … 20 mA, R_{in} = 137 ohm. If the sensor power supply comes through its current output circuit, use 4 … 20 mA signal, not 0 … 20 mA.
+24V DGND	Auxiliary voltage output, non-isolated, +24 V DC, max. 250 mA

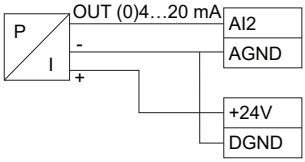

AI2	Process actual value measurement or reference, 0(4)…20 mA, R_{in} = 137 ohm
AGND	
+24V	Auxiliary voltage output, non-isolated, +24 V DC, max. 250 mA
DGND	

AI and AO (or AI, DI and +10 V) as PTC motor temperature sensor interface

WARNING!
IEC 61800-5-1 requires double or reinforced insulation between live parts and accessible parts when:

- the accessible parts are not conductive, or
- the accessible parts are conductive, but not connected to the protective earth.

Obey this requirement when you plan the connection of the motor temperature sensor to the drive.

If the motor temperature sensor has a reinforced insulation vs. the motor windings, you can connect it directly to the drive IO interface. This section shows two connection alternatives for the direct I/O connection. If the sensor does not have reinforced insulation, you must use another type of connection to fulfill the safety requirements. See *Implementing a motor temperature sensor connection (page 61)*.

See the firmware manual for information on the related Motor thermal protection function, and the required parameter settings.

PTC connection 1

1…3 PTC sensors can be connected in series to an analog input and an analog output. The analog output feeds a constant excitation current of 1.6 mA through the sensor. The sensor resistance increases as the motor temperature rises, as does the voltage over the sensor. The temperature measurement function calculates the resistance of the sensor and generates an indication if overtemperature is detected. Leave the sensor end of the cable shield unconnected.

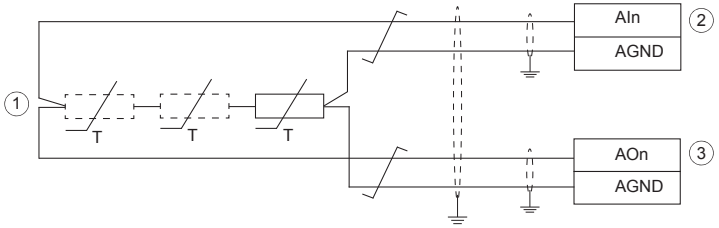

1	1…3 PTC sensors
2	Analog input. Set the analog input type to V (volt) in parameter group *12 Standard AI*. Define the temperature sensor type, signal source, etc. with parameters *35.11…35.24*. For the sensor type, select: *PTC analog I/O*.
3	Analog output. Select the *Excitation mode* for the analog output in parameter group *13 Standard AO*.

PTC connection 2

If no analog output is available for the PTC connection, it is possible to use a voltage divider connection. 1…3 PTC sensors are connected in series with 10 V reference and digital and analog inputs. The voltage over the digital input internal resistance varies depending on the PTC resistance. The temperature measurement function reads the digital input voltage through the analog input and calculates the PTC resistance.

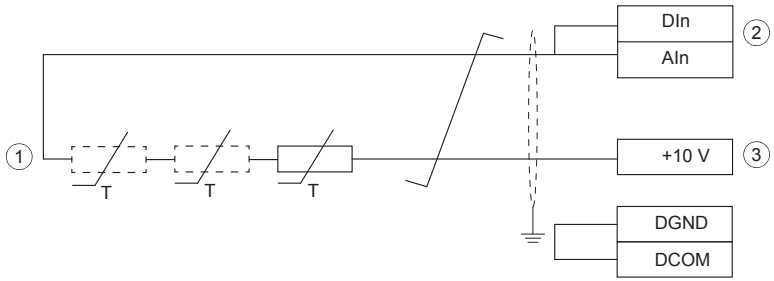

1	1…3 PTC sensors
2	Digital input and analog input. Set the analog input type to V (volt) in parameter group *12 Standard AI*. Define the temperature sensor type, signal source, etc. with parameters *35.11…35.24*. For the sensor type, select: *PTC AI/DI Voltage Divider tree*. Make sure that the digital input is not configured to any other use by parameters.
3	10 V reference voltage

AI1 and AI2 as Pt100, Pt1000, Ni1000, KTY83 and KTY84 sensor inputs

WARNING!
IEC 61800-5-1 requires double or reinforced insulation between live parts and accessible parts when:

- the accessible parts are not conductive, or
- the accessible parts are conductive, but not connected to the protective earth.

Obey this requirement when you plan the connection of the motor temperature sensor to the drive.

If the motor temperature sensor has a reinforced insulation vs. the motor windings, you can connect it directly to the drive IO interface. This section shows the connection. If the sensor has no reinforced insulation, you must use another type of connection to fulfill the safety requirements. See *Implementing a motor temperature sensor connection (page 61)*.

You can connect temperature measurement sensors (one, two or three Pt100 sensors; one, two or three Pt1000 sensors; or one Ni1000, KTY83 or KTY84) between an analog input and output as shown below. Leave the sensor end of the cable shield unconnected.

See the firmware manual for information on the related Motor thermal protection function.

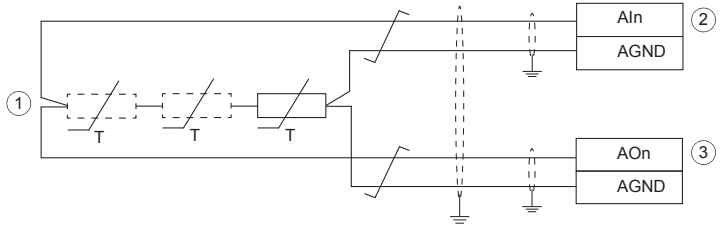

1	1…3 × (Pt100 or Pt1000) or 1 × (Ni1000 or KTY83 or KTY84)
2	Analog input. Set the analog input type to V (volt) in parameter group *12 Standard AI*. Define the temperature sensor type, signal source, etc. with parameters *35.11…35.24*. Set the analog input type to V (volt) in parameter group *12 Standard AI*.
3	Analog output. Select the *Excitation mode* for the analog output in parameter group *13 Standard AO*.

Safe torque off

For the drive to start, both STO connections (S+ to S1 and S+ to S2) must be closed. By default, the terminal block has jumpers to close the circuit. Remove the jumpers before connecting external Safe torque off circuitry to the drive. See chapter *The Safe torque off function*.

Auxiliary voltage connection

The drive has 24 V DC (±10%) auxiliary power supply terminals both on the base unit and on the BMIO-01 module. You can use them:

- to supply auxiliary power from the drive to external control circuits or option modules
- to supply external auxiliary power to the drive to keep the control and cooling in operation if there is a power outage.

See the technical data for the specifications for the auxiliary power supply terminals (input/output).

To supply power to external control circuits or option modules:

1. Connect the load either to the auxiliary power output on the base unit, or on the BMIO-01 module (+24V and DGND terminals).
2. Make sure that you do not exceed the load capacity of the output, or the sum load capacity of both outputs.

To connect an external auxiliary power supply to the drive:

1. Install a BAPO-01 power extension module to the drive. See *Installing options (page 86)*.
2. Connect an external power supply to the +24V and DGND terminals of the base unit.

For more information on the BAPO-01 module, see *BAPO-01 auxiliary power extension module (page 227)*.

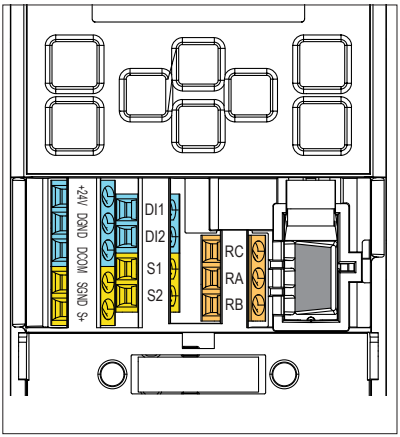

Connecting a PC

To connect a PC to the drive, there are two alternatives:

- Use an ACS-AP-I/S/W assistant control panel as a converter. Use a USB type A – type Mini-B cable. The maximum permitted length of the cable is 3 m (9.8 ft).
- Use a USB to RJ45 converter. You can order it from ABB (BCBL-01, 3AXD50000032449). Connect the cable to the Panel and PC tool port (RJ45).

For information on the Drive composer PC tool, refer to *Drive composer PC tool user's manual* (3AUA0000094606 [English]).

You can use the CCA-01 cold configuration tool to download software and change drive parameters without connecting the drive to the input power. The CCA-01 does not operate if the drive is powered.

Installing options

The drive has two option module slots:

- Front option: Communication module slot under the front cover.
- Side option: Multifunction extension module slot on the side of the drive.

Refer also to the applicable fieldbus module manual for the installation instructions. For other option modules, refer to:

- *BTAC-02 pulse encoder interface module (page 205)*
- *BREL-01 relay output extension module (page 221)*
- *BAPO-01 auxiliary power extension module (page 227)*
- *BIO-01 I/O extension module (page 231)*.

Installing a front option

WARNING!
Obey the safety instructions of the drive. If you ignore them, injury or death, or damage to the equipment can occur. If you are not a qualified electrical professional, do not do installation or maintenance work.

1. Do the steps in section *Electrical safety precautions (page 17)* before you start the work.
2. Remove the screw on the drive front cover, then remove the front cover.
3. If the option module has a locking tab, pull it up.

4. Carefully align the option module with the option module slot and push it into position.

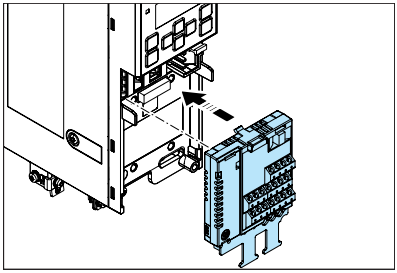

5. Torque the screw to 0.5 N·m (4.4 lbf·in).

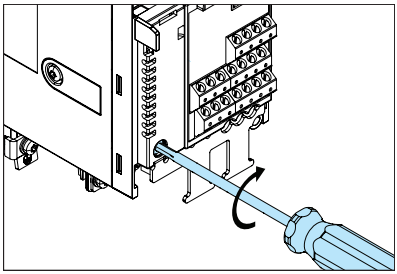

6. If the option module has a locking tab, push it down until it locks.

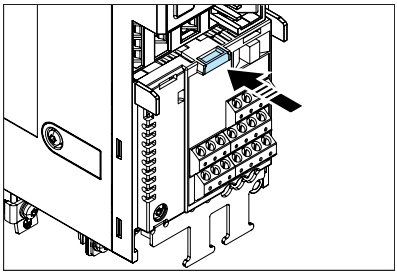

7. Connect the control cables. See the control cable connection instructions.

Note: If you have the BIO-01 option module, you can add one additional fieldbus module on top of it. Replace the drive front cover with the high cover that comes with the BIO-01 module.

Installing a side option

WARNING!
Obey the safety instructions of the drive. If you ignore them, injury or death, or damage to the equipment can occur. If you are not a qualified electrical professional, do not do installation or maintenance work.

1. Do the steps in section *Electrical safety precautions (page 17)* before you start the work.
2. Remove the two screws from the front-most grounding clamp at the bottom of the drive.
3. Carefully align the side option with the connectors on the right side of the drive.
4. Fully push the option module into position.
5. Torque the screw on the option module to 1 N·m (8.8 lbf·in).
6. Attach the grounding bar to the bottom of the side option and to the front ground tab on the drive. Torque the screws to 1 N·m (8.8 lbf·in).
7. Connect the control cables. See the control cable connection instructions.

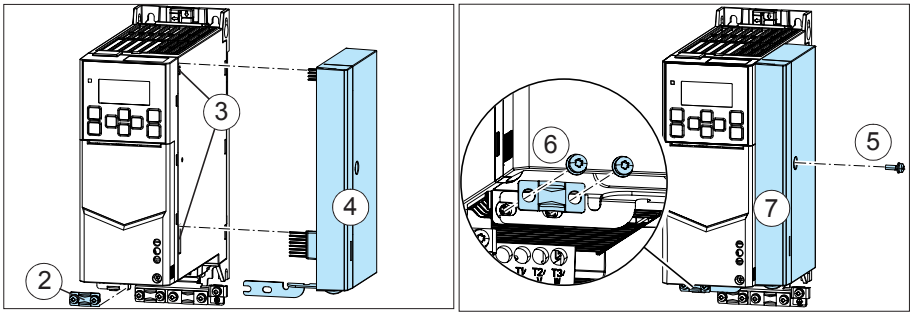

8

Installation checklist

Contents of this chapter

This chapter contains a checklist of the mechanical and electrical installation of the drive.

Checklist

Examine the mechanical and electrical installation of the drive before start-up. Go through the checklist together with another person.

WARNING!
Obey the safety instructions of the drive. If you ignore them, injury or death, or damage to the equipment can occur. If you are not a qualified electrical professional, do not do installation or maintenance work.

WARNING!
Stop the drive and do the steps in section *Electrical safety precautions (page 17)* before you start the work.

Make sure that …	☑
The ambient operating conditions meet the drive ambient conditions specification, and enclosure rating (IP code or UL enclosure type).	☐
The supply voltage matches the nominal input voltage of the drive. See the type designation label.	☐

Make sure that …	☑
The insulation resistance of the input power cable, motor cable and motor is measured according to local regulations and the manuals of the drive.	☐
The drive is attached securely on an even, vertical and non-flammable wall.	☐
The cooling air flows freely in and out of the drive.	☐
If the drive is connected to a network other than a symmetrically grounded TN-S system: You have done all the required modifications (for example, you may need to disconnect the EMC filter or ground-to-phase varistor). See the electrical installation instructions.	☐
Appropriate AC fuses and main disconnecting device are installed.	☐
There is an adequately sized protective earth (ground) conductor(s) between the drive and the switchboard, the conductor is connected to correct terminal, and the terminal is tightened to the correct torque. Proper grounding has also been measured according to the regulations.	☐
The input power cable is connected to the correct terminals, the phase order is correct, and the terminals are tightened to the correct torque.	☐
There is an adequately sized protective earth (ground) conductor between the motor and the drive, and the conductor is connected to the correct terminal, and the terminal is tightened to the correct torque. Proper grounding has also been measured according to the regulations.	☐
The motor cable is connected to the correct terminals, the phase order is correct, and the terminals are tightened to the correct torque.	☐
The motor cable is routed away from other cables.	☐
No power factor compensation capacitors are connected to the motor cable.	☐
If an external brake resistor is connected to the drive: There is an adequately sized protective earth (ground) conductor between the brake resistor and the drive, and the conductor is connected to the correct terminal, and the terminals are tightened to the correct torque. Proper grounding has also been measured according to the regulations.	☐
If an external brake resistor is connected to the drive: The brake resistor cable is connected to the correct terminals, and the terminals are tightened to the correct torque.	☐
If an external brake resistor is connected to the drive: The brake resistor cable is routed away from other cables.	☐
The control cables are connected to the correct terminals, and the terminals are tightened to the correct torque.	☐
If a drive bypass connection will be used: The direct-on-line contactor of the motor and the drive output contactor are either mechanically and/or electrically interlocked, that is, they cannot be closed at the same time. A thermal overload device must be used for protection when bypassing the drive. Refer to local codes and regulations.	☐
There are no tools, foreign objects or dust from drilling inside the drive.	☐

Make sure that …	☑
The area in front of the drive is clean: the drive cooling fan cannot draw any dust or dirt inside.	☐
Drive covers and cover of the motor connection box are in place.	☐
The motor and the driven equipment are ready for power-up.	☐

9

Maintenance

Contents of this chapter

The chapter contains maintenance intervals and instructions.

Maintenance intervals

The tables below show the maintenance tasks which can be done by the end user. The complete maintenance schedule is available on the Internet (www.abb.com/drivesservices). For more information, consult your local ABB Service representative (www.abb.com/searchchannels).

Description of symbols

Action	Description
I	Inspection (visual inspection and maintenance action if needed)
P	Performance of on/off-site work (commissioning, tests, measurements or other work)
R	Replacement

Recommended maintenance intervals after start-up

Recommended annual actions by the user	
Connections and environment	
Quality of supply voltage	P
Spare parts	
Spare parts	I

Recommended annual actions by the user	
DC circuit capacitors reforming for spare modules and spare capacitors	P
Inspections by user	
Tightness of terminals	I
Dustiness, corrosion and temperature	I
Heat sink cleaning	P

Maintenance task/object	Years from start-up						
	3	6	9	12	15	18	21
Cooling fans							
Main cooling fan [1]	(R)	R (R)	(R)	R (R)	(R)	R (R)	(R)
Functional safety							
Safety function test	I See the maintenance information of the safety function.						
Safety component expiry (Mission time T_M)	20 years						

[1] (R) = replacement of component in demanding operating conditions, ie. if surrounding air temperature in continuous operation is over 40 °C (104 °F) or there is a cyclic heavy load.

Note:

- Maintenance and component replacement intervals are based on the assumption that the equipment is operated within the specified ratings and ambient conditions. ABB recommends annual drive inspections to ensure the highest reliability and optimum performance.
- Long term operation near the specified maximum ratings or ambient conditions may require shorter maintenance intervals for certain components. Consult your local ABB Service representative for additional maintenance recommendations.

Functional safety components

The mission time of functional safety components is 20 years which equals the time during which failure rates of electronic components remain constant. This applies to the components of the standard Safe torque off circuit as well as any modules, relays and, typically, any other components that are part of functional safety circuits.

The expiry of mission time terminates the certification and SIL/PL classification of the safety function. The following options exist:

- Renewal of the whole drive and all optional functional safety module(s) and components.

- Renewal of the components in the safety function circuit. In practice, this is economical only with larger drives that have replaceable circuit boards and other components such as relays.

Note that some of the components may already have been renewed earlier, restarting their mission time. The remaining mission time of the whole circuit is however determined by its oldest component.

Contact your local ABB service representative for more information.

Cleaning the heatsink

The drive module heatsink fins pick up dust from the cooling air. The drive runs into overtemperature warnings and faults if the heatsink is not clean. When necessary, clean the heatsink as follows.

WARNING!
Use the required personal protective equipment. Wear protective gloves and long sleeves. Some parts have sharp edges.

WARNING!
Use a vacuum cleaner with antistatic hose and nozzle, and wear a grounding wristband. Using a normal vacuum cleaner creates static discharges which can damage circuit boards.

1. Stop the drive and do the steps in section *Electrical safety precautions (page 17)* before you start the work.
2. Remove the module cooling fan(s). See the separate instructions.
3. Blow dry, clean and oil-free compressed air from bottom to top and simultaneously use a vacuum cleaner at the air outlet to trap the dust. If there is a risk of dust entering adjoining equipment, do the cleaning in another room.
4. Reinstall the cooling fan.

Replacing the cooling fans

These instructions are applicable only to drives with frame size R1…R4. Drives with frame size R0 do not have a cooling fan.

Parameter *05.04 Fan on-time counter* shows the running time of the cooling fan. After you replace the fan, reset the fan counter. Refer to the firmware manual.

You can get replacement fans from ABB. Use only ABB specified spare parts.

Replacing the cooling fan, frames R1…R3

WARNING!
Obey the safety instructions of the drive. If you ignore them, injury or death, or damage to the equipment can occur. If you are not a qualified electrical professional, do not do installation or maintenance work.

1. Stop the drive and do the steps in section *Electrical safety precautions (page 17)* before you start the work.
2. Use a suitable flat screwdriver to open the fan cover.
3. Carefully lift the fan cover out of the drive. The fan cover holds the cooling fan.

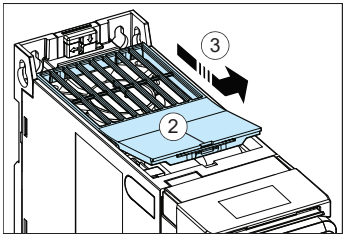

4. Remove the fan power cable from the cable slot in the drive.
5. Disconnect the fan power cable.

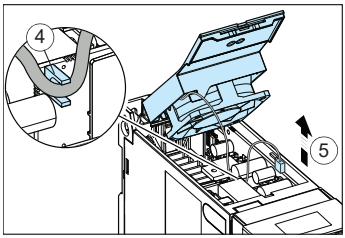

6. Free the fan clips and remove the fan from the fan cover.

7. Install the new fan into the fan cover. Make sure that the air flow is in the correct direction. The air flows in from the bottom of the drive and out from the top of the drive.

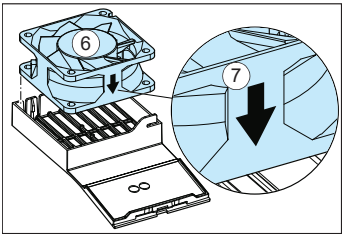

8. Connect the fan power cable.
9. Put the fan power cable into the cable slot in the drive.

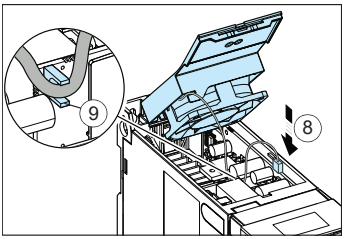

10. Carefully put the fan cover into position in the drive. Make sure that the fan power cable is routed correctly.
11. Push the cover to lock into position.

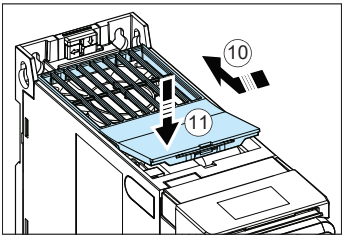

Replacing the cooling fan, frame R4

WARNING!
Obey the safety instructions of the drive. If you ignore them, injury or death, or damage to the equipment can occur. If you are not a qualified electrical professional, do not do installation or maintenance work.

1. Stop the drive and do the steps in section *Electrical safety precautions (page 17)* before you start the work.
2. Use a suitable flat screwdriver to open the fan cover.

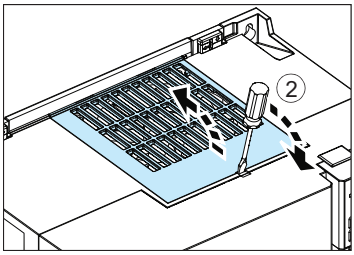

3. Lift out the fan cover and set it aside.

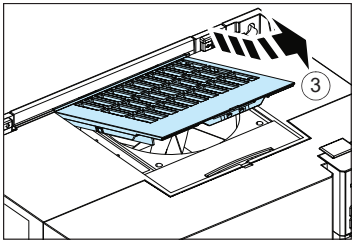

4. Lift and pull the fan from its base.
5. Disconnect the fan power cable from the extension cable connector.

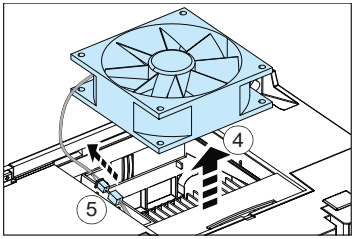

6. Replace the fan. The arrow indicating the air flow direction must point up.
7. Connect the fan power cable.

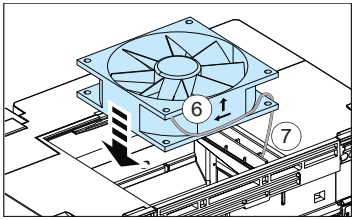

8. Place the fan cover back on the frame.
9. Push the cover to lock into position.

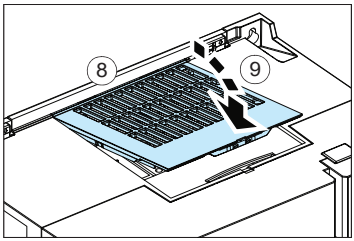

Capacitors

The DC link of the drive contains several electrolytic capacitors. Operating time, load, and surrounding air temperature have an effect on the life of the capacitors. Capacitor life can be extended by decreasing the surrounding air temperature.

Capacitor failure is usually followed by damage to the unit and an input cable fuse failure, or a fault trip. If you think that any capacitors in the drive have failed, contact ABB.

Reforming the capacitors

The capacitors must be reformed if the drive has not been powered (either in storage or unused) for a year or more. The manufacturing date is on the type designation label. For information on reforming the capacitors, see *Capacitor reforming instructions* (3BFE64059629 [English]) in the ABB Library (https://library.abb.com/en).

10

Technical data

Contents of this chapter

This chapter contains the technical specifications of the drive, for example, the ratings, sizes and technical requirements, provisions for fulfilling the requirements for CE, UL and other approval marks.

Electrical ratings

IEC ratings

Type ACS380-04xx-…	Input current		Output ratings							Frame size
	No choke	With choke	Max. current	Nominal use		Light-duty use		Heavy-duty use		
	I_{1N}	I_{1N}	I_{max}	I_N	P_N	I_{Ld}	P_{Ld}	I_{Hd}	P_{Hd}	
	A	A	A	A	kW	A	kW	A	kW	
1-phase U_N = 230 V										
02A4-1	5.0	4.2	3.2	2.4	0.37	2.3	0.37	1.8	0.25	R0
03A7-1	7.1	6.4	4.3	3.7	0.55	3.5	0.55	2.4	0.37	R0
04A8-1	8.8	8.3	6.7	4.8	0.75	4.6	0.75	3.7	0.55	R1
06A9-1	12.0	11.9	8.6	6.9	1.10	6.6	1.10	4.8	0.75	R1
07A8-1	14.2	13.5	12.4	7.8	1.5	7.4	1.5	6.9	1.1	R1
09A8-1	18.7	17.0	14.0	9.8	2.2	9.3	2.2	7.8	1.5	R2
12A2-1	24.6	21.1	17.6	12.2	3.0	11.6	3.0	9.8	2.2	R2
3-phase U_N = 230 V										
02A4-2	3.6	2.4	3.2	2.4	0.37	2.4	0.37	1.8	0.25	R1

Type ACS380-04xx-…	Input current		Output ratings							Frame size
	No choke	With choke	Max. current	Nominal use		Light-duty use		Heavy-duty use		
	I_{1N}	I_{1N}	I_{max}	I_N	P_N	I_{Ld}	P_{Ld}	I_{Hd}	P_{Hd}	
	A	A	A	A	kW	A	kW	A	kW	
03A7-2	5.1	3.7	4.3	3.7	0.55	3.2	0.55	2.4	0.37	R1
04A8-2	6.3	4.8	6.7	4.8	0.75	4.6	0.75	3.7	0.55	R1
06A9-2	8.4	6.9	8.6	6.9	1.1	6.6	1.1	4.8	0.75	R1
07A8-2	10.1	7.8	12.4	7.8	1.5	7.5	1.5	6.9	1.1	R1
09A8-2	13.8	9.8	14.0	9.8	2.2	9.3	2.2	7.8	1.5	R1
12A2-2	17.3	12.2	17.6	12.2	3.0	11.6	3.0	9.8	2.2	R2
17A5-2	22.2	17.5	22.0	17.5	4.0	16.7	4.0	12.2	3.0	R3
25A0-2	29.1	25.0	31.5	25.0	5.5	24.2	5.5	17.5	4.0	R3
032A-2	37.0	32.0	45.0	32.0	7.5	30.8	7.5	25.0	5.5	R4
048A-2	50.0	48.0	57.6	48.0	11.0	46.2	11.0	32.0	7.5	R4
055A-2	60.0	55.0	86.4	55.0	15.0	52.8	15.0	48.0	11.0	R4
3-phase U_N = 400 V										
01A8-4	2.9	1.8	2.2	1.8	0.55	1.7	0.55	1.2	0.37	R0
02A6-4	3.8	2.6	3.2	2.6	0.75	2.5	0.75	1.8	0.55	R1
03A3-4	5.1	3.3	4.7	3.3	1.1	3.1	1.1	2.6	0.75	R1
04A0-4	6.4	4.0	5.9	4.0	1.5	3.8	1.5	3.3	1.1	R1
05A6-4	8.9	5.6	7.2	5.6	2.2	5.3	2.2	4.0	1.5	R1
07A2-4	10.9	7.2	10.1	7.2	3.0	6.8	3.0	5.6	2.2	R1
09A4-4	13.9	9.4	13.0	9.4	4.0	8.9	4.0	7.2	3.0	R1
12A6-4	17.6	12.6	16.9	12.6	5.5	12.0	5.5	9.4	4.0	R2
17A0-4	25.2	17.0	22.7	17.0	7.5	16.2	7.5	12.6	5.5	R3
25A0-4	34.1	25.0	30.6	25.0	11.0	23.8	11.0	17.0	7.5	R3
032A-4	43.4	32.0	45.0	32.0	15.0	30.5	15.0	25.0	11.0	R4
038A-4	52.3	38.0	57.6	38.0	18.5	36.0	18.5	32.0	15.0	R4
045A-4	56.0	45.0	68.4	45.0	22.0	42.8	22.0	38.0	18.5	R4
050A-4	58.9	50.0	81.0	50.0	22.0	48.0	22.0	45.0	22.0	R4

UL (NEC) ratings

Type ACS380-04xx-…	Input current		Output ratings					Frame size
	No choke	With choke	Max. current	Light-duty use		Heavy-duty use		
	I_{1Ld}	I_{1Ld}	I_{max}	I_{Ld}	P_{Ld}	I_{Hd}	P_{Hd}	
	A	A	A	A	hp	A	hp	
1-phase U_N = 230 V								
02A4-1	4.8	4.0	3.2	2.3	0.5	1.8	0.33	R0
03A7-1	6.8	6.1	4.3	3.5	0.8	2.3	0.5	R0
04A8-1	8.2	8.0	6.7	4.6	1.0	3.5	0.75	R1
06A9-1	12.0	11.4	8.6	6.6	1.5	4.6	1.0	R1
07A8-1	13.0	12.8	12.4	7.4	2.0	6.6	1.5	R1
09A8-1	18.0	16.1	14.0	9.3	3.0	7.4	2.0	R2
12A2-1	20.6	20.1	17.6	11.6	3.0	9.3	3.0	R2
3-phase U_N = 230 V								
02A4-2	3.5	2.4	3.2	2.4	0.5	1.8	0.33	R1
03A7-2	4.8	3.2	4.3	3.2	0.75	2.4	0.5	R1
04A8-2	5.8	4.6	6.7	4.6	1.0	3.2	0.75	R1
06A9-2	8.3	6.6	8.6	6.6	1.5	4.6	1.0	R1
07A8-2	9.2	7.5	12.4	7.5	2.0	6.6	1.5	R1
09A8-2	13.2	9.3	14.0	9.3	2.0	7.5	2.0	R1
12A2-2	12.8	11.6	17.6	11.6	3.0	9.3	3.0	R2
17A5-2	20.5	16.7	22.0	16.7	5.0	11.6	3.0	R3
25A0-2	29.7	24.2	31.5	24.2	7.5	16.7	5.0	R3
032A-2	36.0	30.8	45.0	30.8	10.0	24.2	7.5	R4
048A-2	50.5	46.2	57.6	46.2	15.0	30.8	10.0	R4
055A-2	57.6	52.8	86.4	52.8	20.0	46.2	15.0	R4
3-phase U_N = 480 V								
01A8-4	2.4	1.6	2.2	1.6	0.75	1.1	0.50	R0
02A6-4	3.0	2.1	3.2	2.1	1.0	1.6	0.75	R1
03A3-4	4.3	3.0	4.7	3.0	1.5	2.1	1.0	R1
04A0-4	4.9	3.5	5.9	3.5	2.0	3.0	1.5	R1
05A6-4	6.7	4.8	7.2	4.8	3.0	3.5	2.0	R1
07A2-4	6.7	6.0	10.1	6.0	3.0	4.8	3.0	R1
09A4-4	10.6	7.6	13.0	7.6	5.0	6.0	3.0	R1
12A6-4	14.9	11.0	16.9	11.0	7.5	7.6	5.0	R2
17A0-4	20.2	14.0	22.7	14.0	10.0	11.0	7.5	R3
25A0-4	28.5	21.0	30.6	21.0	15.0	14.0	10.0	R3
032A-4	35.8	27.0	45.0	27.0	20.0	21.0	15.0	R4
038A-4	43.8	34.0	57.6	34.0	25.0	27.0	20.0	R4

Type ACS380-04xx-…	Input current		Output ratings					Frame size
	No choke	With choke	Max. current	Light-duty use		Heavy-duty use		
	I_{1Ld}	I_{1Ld}	I_{max}	I_{Ld}	P_{Ld}	I_{Hd}	P_{Hd}	
	A	A	A	A	hp	A	hp	
045A-4	49.4	40.0	68.4	40.0	30.0	34.0	25.0	R4
050A-4	49.4	42.0	81.0	42.0	30.0	40.0	30.0	R4

Definitions

The ratings are valid at a maximum surrounding air temperature of 50 °C (122 °F), with the default drive switching frequency of 4 kHz (parameter *97.01*), and with an installation altitude below 1000 m (3281 ft).

U_N Nominal input voltage of the drive. For input voltage range U1, refer to *Electrical power network specification (page 151)*.

I_{1N} Nominal input current with typical motor power P_N. Continuous rms input current, for dimensioning cables and fuses.

I_{1Ld} Light-duty input current (rms) with typical motor power P_{Ld}, for dimensioning cables and fuses.

I_{max} Maximum output current. Available for 2 seconds every 10 minutes when the output frequency is less than 9 Hz. Otherwise maximum current is 1.5 × I_{Hd}. Maximum current setting (parameter *30.17*) can also limit the value.

I_N Nominal output current. Maximum continuous rms output current (no overload).

P_N Typical motor power in nominal use (no overloading). The kilowatt ratings are applicable to most IEC 4-pole motors.

I_{Ld} Continuous rms output current. Allows 10% overload for 1 minute every 10 minutes.

P_{Ld} Typical motor power in light-duty use (10% overload). The kilowatt ratings are applicable to most IEC 4-pole motors. The horsepower ratings are applicable to most NEMA 4-pole motors.

I_{Hd} Continuous rms output current. Allows 50% overload for 1 minute every 10 minutes.

P_{Hd} Typical motor power in heavy-duty use (50% overload). The kilowatt ratings are applicable to most IEC 4-pole motors. The horsepower ratings are applicable to most NEMA 4-pole motors.

Sizing

ABB recommends the DriveSize tool for selecting the drive, motor and gear combination (https://new.abb.com/drives/software-tools/drivesize). You can also use the ratings tables.

The minimum recommended nominal current of the motor is 40% of the drive nominal output current (I_N) (50% for drive type ACS380-04xx-01A8-4). If the motor has a lower nominal current rating than this, the drive cannot accurately measure the motor current.

Output derating

The load capacity (I_N, I_{Ld}, I_{Hd}) decreases in some situations. In such situations, where full motor power is required, oversize the drive so that the total derated output current is sufficient for the motor to reach the full power.

In an environment where more than one type of derating is necessary (for example, high altitude and high temperature), the effects of derating are cumulative.

Note:

- I_{max} is not derated.
- The motor can also have a derating on it.
- You can also use the DriveSize tool for derating.

See *Surrounding air temperature derating (page 133)*, *Altitude derating (page 133)* and *Switching frequency derating (page 134)* for the derating values.

Example 1, IEC: How to calculate the derated current

The drive type is ACS380-04xx-17A0-4, which has a nominal output current (I_N) of 17 A at 400 V. Calculate the derated output current at 4 kHz switching frequency, at 1500 m altitude and at 55 °C surrounding air temperature.

Switching frequency derating: Derating is not necessary at 4 kHz.

Altitude derating: The derating factor for 1500 m is $1 - \frac{1500\ m - 1000\ m}{10000\ m} = 0.95$

Surrounding air temperature derating: The derating factor for 55 °C surrounding air temperature is $1 - \frac{55\ C - 50\ C}{100\ C} = 0.95$

Multiply the nominal drive output current by all the applicable derating factors. In this example, the derated output current becomes $I_N = 17\ A \cdot 0.95 \cdot 0.95 = 15.34\ A$

Example 1, UL (NEC): How to calculate the derated current

The drive type is ACS380-04xx-17A0-4, which has light-duty output current (I_{Ld}) of 14 A at 480 V. Calculate the derated output current at 4 kHz switching frequency, at 6000 ft altitude and at 131 °F surrounding air temperature.

Switching frequency derating: Derating is not necessary at 4 kHz.

Altitude derating: The derating factor for 6000 ft is $1 - \frac{6000\ ft - 3281\ ft}{32810\ ft} = 0.917$

Surrounding air temperature derating: The derating factor for 131 °F surrounding air temperature is $1 - \frac{131\ F - 122\ F}{180\ F} = 0.95$

Multiply the drive output current by all the applicable derating factors. In this example, the derated output current becomes $I_{Ld} = 14\ A \cdot 0.917 \cdot 0.95 = 12.2\ A$

Example 2, IEC: How to calculate the required drive

The application requires a nominal motor current of 6.0 A at a switching frequency of 8 kHz. The supply voltage is 400 V, the altitude is 1800 m and the surrounding air temperature is 35 °C.

Altitude derating: The derating factor for 1800 m is $1 - \frac{1800\ m - 1000\ m}{10000\ m} = 0.92.$

Surrounding air temperature derating: Derating is not necessary at 35 °C surrounding air temperature.

To see if the derated output current of a drive is sufficient for the application, multiply the nominal output current (I_N) by all the applicable derating factors. For example, drive type ACS380-04xx-12A6-4 has a nominal output current of 12.6 A at 400 V. The switching frequency derating factor for this drive type is 0.68 at 8 kHz. Calculate the derated drive output current: $I_N = 12.6\ A \cdot 0.68 \cdot 0.92 = 7.88\ A$

In this example, the derated output current is sufficient, because it is higher than the required current.

Example 2, UL (NEC): How to calculate the required drive

The application requires a maximum of 12.0 A of motor current with a 10% overload for one minute every ten minutes (I_{Ld}) at a switching frequency of 8 kHz. The supply voltage is 480 V, the altitude is 5500 ft and the surrounding air temperature is 95 °F.

Altitude derating: The derating factor for 5500 ft is $1 - \frac{5500\ ft - 3281\ ft}{32810\ ft} = 0.932.$

Surrounding air temperature derating: Derating is not necessary at 95 °F surrounding air temperature.

To see if the derated output current of a drive is sufficient for the application, multiply the drive output current for light-duty use (I_{Ld}) by all the applicable derating factors. For example, drive type ACS380-04xx-25A0-4 has an output current of 21 A at 480 V. The switching frequency derating for this drive type is 0.67 at 8 kHz. Calculate the derated drive output current: $I_{Ld} = 21\ A \cdot 0.67 \cdot 0.932 = 13.11\ A$

In this example, the derated output current is sufficient, because it is higher than the required current.

Surrounding air temperature derating

Frame	Temperature	Derating
All	Less than 50 °C (122 °F)	No derating
R1…R3	50 … 60 °C (122 … 140 °F)	Output current decreases by 1% for each additional 1 °C (1.8 F).
R4	50 … 60 °C (122 … 140 °F)	Output current decreases by 1% for each additional 1 °C (1.8 F) on: • ACS380-04xx-032A-2 • ACS380-04xx-048A-2 • ACS380-04xx-032A-4 • ACS380-04xx-045A-4 Output current decreases by 2% for each additional 1 °C (1.8 F) on: • ACS380-04xx-055A-2 • ACS380-04xx-038A-4 • ACS380-04xx-050A-4

Altitude derating

230 V drives: At altitudes 1000 … 2000 m (3281 … 6562 ft) above sea level, the derating is 1% for each added 100 m (328 ft) above 1000 m (3281 ft).

400/480 V drives: At altitudes 1000 … 4000 m (3281 … 13123 ft) above sea level, the derating is 1% for each added 100 m (328 ft) above 1000 m (3281 ft). In addition:

- A maximum altitude of 4000 m (13123 ft) is permitted for these grounding systems: TN-S, TT. A maximum altitude of 2000 m (6562 ft) is permitted for these grounding systems: corner-grounded delta, midpoint-grounded delta, IT (ungrounded).
- Above 2000 m (6562 ft), the maximum permitted voltage for the relay output RO1 decreases. At 4000 m (13123 ft), it is 30 V.
- Above 2000 m (6562 ft), the maximum permitted potential difference between the adjacent relays of the BREL-01 relay extension module (option +L511) decreases. At 4000 m (13123 ft), it is 30 V.

To calculate the derated output current, multiply the current in the ratings table with the derating factor *k*, which for *x* meters or feet is:

$$k = 1 - \frac{x - 1000\ m}{10000\ m}$$

$$k = 1 - \frac{x - 3281\ ft}{32810\ ft}$$

Switching frequency derating

Derating the drive output current is necessary when using high minimum switching frequencies. If you change parameter *97.02 Minimum switching frequency*, calculate the derated current. Multiply the drive output current with the applicable derating factor from the table.

Derating is not necessary when changing parameter *97.01 Switching frequency reference*.

Frame R4: If the application is cyclic and the surrounding air temperature is constantly more than 40 °C (104 °F), keep parameter *97.02 Minimum switching frequency* at its default value (1.5 kHz). Higher switching frequencies decrease the product life time or the performance in the temperature range 40 … 60°C (104 … 140 °F).

Type ACS380-04xx-…	Derating factor		
	≤ 4 kHz	8 kHz	12 kHz
1-phase U_N = 230 V			
02A4-1	1.0	0.80	0.66
03A7-1	1.0	0.80	0.66
04A8-1	1.0	0.81	0.68
06A9-1	1.0	0.81	0.68
07A8-1	1.0	0.85	0.74
09A8-1	1.0	0.85	0.74
12A2-1	1.0	0.82	0.69
3-phase U_N = 230 V			
02A4-2	1.0	0.84	0.73
03A7-2	1.0	0.84	0.73
04A8-2	1.0	0.84	0.73
06A9-2	1.0	0.84	0.73
07A8-2	1.0	0.83	0.70
09A8-2	1.0	0.83	0.70
12A2-2	1.0	0.76	0.61
17A5-2	1.0	0.76	0.61
25A0-2	1.0	0.75	0.60
032A-2	1.0	0.75	0.59
048A-2	1.0	0.74	0.60
055A-2	1.0	0.74	0.60
3-phase U_N = 400 V or 480 V			
01A8-4	1.0	0.65	0.48
02A6-4	1.0	0.65	0.48
03A3-4	1.0	0.65	0.48
04A0-4	1.0	0.65	0.48

Type ACS380-04xx-…	Derating factor		
	≤ 4 kHz	8 kHz	12 kHz
05A6-4	1.0	0.65	0.48
07A2-4	1.0	0.65	0.48
09A4-4	1.0	0.65	0.48
12A6-4	1.0	0.68	0.51
17A0-4	1.0	0.68	0.51
25A0-4	1.0	0.67	0.51
032A-4	1.0	0.65	0.49
038A-4	1.0	0.65	0.49
045A-4	1.0	0.66	0.49
050A-4	1.0	0.66	0.49

Fuses

The tables list the fuses for protection against short-circuits in the input power cable or drive. The operating time depends on the supply network impedance, and the cross-sectional area and length of the supply cable.

Do not use fuses that have a higher current rating than specified in the table. You can use fuses from other manufacturers, if they meet the ratings, and if the melting curve of the fuse does not exceed the melting curve of the fuse mentioned in the table.

IEC fuses

Either fuse type can be used if it operates rapidly enough.

gG fuses

Make sure that the operating time of the fuse is less than 0.5 seconds. Obey the local regulations.

Type ACS380-04xx-…	Input current	Min. short-circuit current 1)	Fuses				
			Nominal current	I^2t	Voltage rating	ABB type	IEC 60269 size
	A	A	A	A^2s	V		
1-phase U_N = 230 V							
02A4-1	5.0	80	10	380	500	OFAF000H10	000
03A7-1	7.1	80	10	380	500	OFAF000H10	000
04A8-1	8.8	128	16	720	500	OFAF000H16	000
06A9-1	12.0	200	20	1500	500	OFAF000H20	000
07A8-1	14.2	200	25	2500	500	OFAF000H25	000
09A8-1	18.7	256	32	2500	500	OFAF000H32	000

Type ACS380-04xx-…	Input current	Min. short-circuit current [1]	Fuses				
			Nominal current	I^2t	Voltage rating	ABB type	IEC 60269 size
	A	A	A	A^2s	V		
12A2-1	24.6	320	35	7000	500	OFAF000H35	000
3-phase U_N = 230 V							
02A4-2	3.6	48	6	110	500	OFAF000H6	000
03A7-2	5.1	80	10	360	500	OFAF000H10	000
04A8-2	6.3	80	10	360	500	OFAF000H10	000
06A9-2	8.4	128	16	740	500	OFAF000H16	000
07A8-2	10.1	128	16	740	500	OFAF000H16	000
09A8-2	13.8	128	16	740	500	OFAF000H16	000
12A2-2	17.3	200	25	2500	500	OFAF000H25	000
17A5-2	22.2	256	32	4500	500	OFAF000H32	000
25A0-2	29.1	400	50	15500	500	OFAF000H50	000
032A-2	37.0	504	63	20000	500	OFAF000H63	000
048A-2	50.0	800	100	65000	500	OFAF000H100	000
055A-2	60.0	800	100	65000	500	OFAF000H100	000
3-phase U_N = 400 V							
01A8-4	2.9	32	4	55	500	OFAF000H4	000
02A6-4	3.8	48	6	110	500	OFAF000H6	000
03A3-4	5.1	48	6	110	500	OFAF000H6	000
04A0-4	6.4	80	10	360	500	OFAF000H10	000
05A6-4	8.9	80	10	360	500	OFAF000H10	000
07A2-4	10.9	128	16	740	500	OFAF000H16	000
09A4-4	13.9	128	16	740	500	OFAF000H16	000
12A6-4	17.6	200	25	2500	500	OFAF000H25	000
17A0-4	25.2	256	32	4500	500	OFAF000H32	000
25A0-4	34.1	400	50	15500	500	OFAF000H50	000
032A-4	43.4	504	63	20000	500	OFAF000H63	000
038A-4	52.3	640	80	36000	500	OFAF000H80	000
045A-4	56.0	800	100	65000	500	OFAF000H100	000
050A-4	58.9	800	100	65000	500	OFAF000H100	000

[1] Minimum permitted short-circuit current of the electrical power network

gR fuses

Type ACS380-04xx-…	Input current	Min. short-circuit current 1)	Fuses				
			Nominal current	I^2t	Voltage rating	Bussmann type	IEC 60269 size
	A	A	A	A^2s	V		
1-phase U_N = 230 V							
02A4-1	5.0	80	32	275	690	170M2695	00
03A7-1	7.1	80	32	275	690	170M2695	00
04A8-1	8.8	128	40	490	690	170M2696	00
06A9-1	12.0	200	50	1000	690	170M2697	00
07A8-1	14.2	200	63	1800	690	170M2698	00
09A8-1	18.7	256	63	1800	690	170M2698	00
12A2-1	24.6	320	63	1800	690	170M2698	00
3-phase U_N = 230 V							
02A4-2	3.6	48	25	125	690	170M2694	00
03A7-2	5.1	80	32	275	690	170M2695	00
04A8-2	6.3	80	32	275	690	170M2695	00
06A9-2	8.4	128	40	490	690	170M2696	00
07A8-2	10.1	128	40	490	690	170M2696	00
09A8-2	13.8	128	40	490	690	170M2696	00
12A2-2	17.3	200	50	1000	690	170M2697	00
17A5-2	22.2	256	63	1800	690	170M2698	00
25A0-2	29.1	400	80	3600	690	170M2699	00
032A-2	37.0	504	100	6650	690	170M2700	00
048A-2	50.0	800	160	22500	690	170M2702	00
055A-2	60.0	800	160	22500	690	170M2702	00
3-phase U_N = 400 V							
01A8-4	2.9	32	25	125	690	170M2694	00
02A6-4	3.8	48	25	125	690	170M2694	00
03A3-4	5.1	48	25	125	690	170M2694	00
04A0-4	6.4	80	32	275	690	170M2695	00
05A6-4	8.9	80	32	275	690	170M2695	00
07A2-4	10.9	128	40	490	690	170M2696	00
09A4-4	13.9	128	40	490	690	170M2696	00
12A6-4	17.6	200	50	1000	690	170M2697	00
17A0-4	25.2	256	63	1800	690	170M2698	00
25A0-4	34.1	400	80	3600	690	170M2699	00
032A-4	43.4	504	100	6650	690	170M2700	00
038A-4	52.3	640	125	12000	690	170M2701	00
045A-4	56.0	800	160	22500	690	170M2702	00

Type ACS380-04xx-…	Input current	Min. short-circuit current [1]	Fuses				
			Nominal current	I^2t	Voltage rating	Bussmann type	IEC 60269 size
	A	A	A	A^2s	V		
050A-4	58.9	800	160	22500	690	170M2702	00

[1] Minimum permitted short-circuit current of the electrical power network

UL (NEC) fuses

The UL listed fuses in the table are the required branch circuit protection. Fuses must be provided as part of the installation.

Type ACS380-04xx-…	Input current	Fuses				
		Nominal current	Voltage rating	Bussmann/ Edison type	Type	Max. fuse rating for group installation [1]
	A	A	V			A
1-phase U_N = 230 V						
02A4-1	5.0	10	300	JJN/TJN10	UL class T	10
03A7-1	7.1	10	300	JJN/TJN10	UL class T	10
04A8-1	8.8	20	300	JJN/TJN20	UL class T	25
06A9-1	12.0	20	300	JJN/TJN20	UL class T	25
07A8-1	14.2	25	300	JJN/TJN25	UL class T	25
09A8-1	18.7	25	300	JJN/TJN25	UL class T	35
12A2-1	24.6	35	300	JJN/TJN35	UL class T	35
3-phase U_N = 230 V						
02A4-2	3.6	6	600	JJS/TJS6	UL class T	25
03A7-2	5.1	10	600	JJS/TJS10	UL class T	25
04A8-2	6.3	10	600	JJS/TJS10	UL class T	25
06A9-2	8.4	20	600	JJS/TJS20	UL class T	25
07A8-2	10.1	20	600	JJS/TJS20	UL class T	25
09A8-2	13.8	20	600	JJS/TJS20	UL class T	25
12A2-2	17.3	25	600	JJS/TJS25	UL class T	30
17A5-2	22.2	35	600	JJS/TJS35	UL class T	40
25A0-2	29.1	50	600	JJS/TJS50	UL class T	40
032A-2	37.0	60	600	JJS/TJS60	UL class T	100
048A-2	50.0	100	600	JJS/TJS100	UL class T	100
055A-2	60.0	100	600	JJS/TJS100	UL class T	100
3-phase U_N = 480 V						
01A8-4	2.9	6	600	JJS/TJS6	UL class T	6

Type ACS380-04xx-…	Input current	Fuses				
		Nominal current	Voltage rating	Bussmann/ Edison type	Type	Max. fuse rating for group installation [1]
	A	A	V			A
02A6-4	3.8	6	600	JJS/TJS6	UL class T	25
03A3-4	5.1	6	600	JJS/TJS6	UL class T	25
04A0-4	6.4	10	600	JJS/TJS10	UL class T	25
05A6-4	8.9	10	600	JJS/TJS10	UL class T	25
07A2-4	10.9	20	600	JJS/TJS20	UL class T	25
09A4-4	13.9	20	600	JJS/TJS20	UL class T	25
12A6-4	17.6	25	600	JJS/TJS25	UL class T	30
17A0-4	25.2	35	600	JJS/TJS35	UL class T	40
25A0-4	34.1	40	600	JJS/TJS40	UL class T	40
032A-4	43.4	60	600	JJS/TJS60	UL class T	100
038A-4	52.3	80	600	JJS/TJS80	UL class T	100
045A-4	56.0	100	600	JJS/TJS100	UL class T	100
050A-4	58.9	100	600	JJS/TJS100	UL class T	100

[1] Branch circuit short-circuit protection for group installation by fuses: Suitable for motor group installation on a circuit that is capable of delivering no more than 65000 rms symmetrical amperes, 480 V maximum, when protected by class T fuses. The same fuse size is specified for several consecutive drive types. This is possible since the physical structure of the drive types is identical.

1. Fuses are required as part of the installation, are not included in the base drive configuration and must be provided by others.
2. Fuses with a higher current rating than specified must not be used.
3. The UL listed fuses recommended by ABB are the required branch circuit protection per NEC.
4. The recommended size or smaller UL 248 listed fast acting, time delay, or high speed fuses must be used to maintain the UL listing of the drive. Additional protection can be used. Refer to local codes and regulations.
5. A fuse of a different class can be used at the high fault rating where the I_{peak} and I^2t of the new fuse is not greater than that of the specified fuse.
6. UL 248 listed, fast acting, time delay, or high speed fuses from other manufacturers can be used if they meet the same class and rating requirements specified in the rules above.
7. When installing a drive, always follow ABB installation instructions, NEC requirements and local codes.
8. Alternative fuses can be used if they meet certain characteristics. For acceptable fuses, see the manual supplement (3AXD50000645015).

Alternative short-circuit protection

Miniature circuit breakers (IEC)

If you use a miniature circuit breaker for the short-circuit protection of the drive, install the drive into a metal enclosure.

Note: Miniature circuit breakers with or without fuses have not been evaluated for use as short-circuit protection in North American (UL) environments.

The protective characteristics of the circuit breakers depend on the type, construction and settings of the breakers. There are also limitations pertaining to the short-circuit capacity of the supply network. Your local ABB representative can help you in selecting the breaker type when the supply network characteristics are known.

WARNING!
Due to the inherent operating principle and construction of circuit breakers, independent of the manufacturer, hot ionized gases can escape from the breaker enclosure in case of a short-circuit. To ensure safe use, pay special attention to the installation and placement of the breakers. Obey the manufacturer's instructions.

You can use the circuit breakers specified by ABB. You can also use other circuit breakers with the drive if they provide the same electrical characteristics. ABB does not assume any liability whatsoever for the correct function and protection of the circuit breakers not specified by ABB. Furthermore, if the specifications given by ABB are not obeyed, the drive can experience problems the warranty does not cover.

Type ACS380-04xx-…	Frame size	Miniature circuit breaker	Network SC 1)
		ABB type	kA
1-phase U_N = 230 V			
02A4-1	R0	S 201P-B 10 NA	5
03A7-1	R0	S 201P-B 10 NA	5
04A8-1	R1	S 201P-B 16 NA	5
06A9-1	R1	S 201P-B 20 NA	5
07A8-1	R1	S 201P-B 25 NA	5
09A8-1	R2	S 201P-B 25 NA	5
12A2-1	R2	S 201P-B 32 NA	5
3-phase U_N = 230 V			
02A4-2	R1	S 203P-Z 6 NA	5
03A7-2	R1	S 203P-Z 8 NA	5
04A8-2	R1	S 203P-Z 10 NA	5
06A9-2	R1	S 203P-Z 16 NA	5
07A8-2	R1	S 203P-Z 16 NA	5

Type ACS380-04xx-…	Frame size	Miniature circuit breaker	Network SC 1)
		ABB type	kA
09A8-2	R1	S 203P-Z 25 NA	5
12A2-2	R2	S 203P-Z 25 NA	5
17A5-2	R3	S 203P-Z 32 NA	5
25A0-2	R3	S 203P-Z 50 NA	5
032A-2	R4	S 203P-Z 63 NA	5
048A-2	R4	Contact ABB	5
055A-2	R4	Contact ABB	5
3-phase U_N = 400 V			
01A8-4	R0	S 203P-B 4	5
02A6-4	R1	S 203P-B 6	5
03A3-4	R1	S 203P-B 6	5
04A0-4	R1	S 203P-B 8	5
05A6-4	R1	S 203P-B 10	5
07A2-4	R1	S 203P-B 16	5
09A4-4	R1	S 203P-B 16	5
12A6-4	R2	S 203P-B 25	5
17A0-4	R3	S 203P-B 32	5
25A0-4	R3	S 203P-B 50	5
032A-4	R4	S 203P-B 63	5
038A-4	R4	S 803S-B 80	5
045A-4	R4	S 803S-B 100	5
050A-4	R4	S 803S-B 100	5

1) Maximum permitted rated conditional short-circuit current (IEC 61800-5-1) of the electrical power network.

Manual self-protected combination motor controller – Type E USA (UL (NEC))

You can use the ABB Type E manual motor protectors (MMP) MS132 & S1-M3-25, MS165-xx and MS5100-100 as an alternative to the recommended fuses as a means of branch circuit protection. This is in accordance with the National Electrical Code (NEC). When the correct ABB Type E manual motor protector is selected from the table and used for branch circuit protection, the drive is suitable for use in a circuit capable of delivering no more than 65 kA rms symmetrical amperes at the maximum rated voltage of the drive. See the table below for the appropriate MMP types and minimum enclosure volume of IP20 / UL open type drive mounted in an enclosure.

If you use a manual motor protector for the branch circuit protection of the drive, install the drive into a metal enclosure.

Note: The UL Listing of drive and MMP combinations applies only to drives that are mounted in appropriately sized metal enclosures that are capable of containing any drive component failure. Wall-mounted drives with UL Type 1 kits (optional) are not covered by the UL combination listing of drives with MMPs.

WARNING!
Use fuses for the short-circuit protection of a wall-mounted drive with the UL Type 1 kit (optional). Serious injury, fire, or damage to equipment can result from the use of MMPs instead of fuses.

Type ACS380-04xx-…	Frame	MMP type [1) 2) 3)]	Minimum enclosure volume [4)]	
			dm^3	in^3
1-phase U_N = 230 V				
02A4-1	R0	MS132-6.3 & S1-M3-25 [5)]	30.3	1850
03A7-1	R0	MS132-10 & S1-M3-25 [5)]	30.3	1850
04A8-1	R1	MS165-16	30.3	1850
06A9-1	R1	MS165-16	30.3	1850
07A8-1	R1	MS165-20	30.3	1850
09A8-1	R2	MS165-25	30.3	1850
12A2-1	R2	MS165-32	30.3	1850
3-phase U_N = 230 V				
02A4-2	R1	MS132-6.3 & S1-M3-25 [5)]	30.3	1850
03A7-2	R1	MS132-10 & S1-M3-25 [5)]	30.3	1850
04A8-2	R1	MS132-10 & S1-M3-25 [5)]	30.3	1850
06A9-2	R1	MS165-16	30.3	1850
07A8-2	R1	MS165-16	30.3	1850
09A8-2	R1	MS165-16	30.3	1850
12A2-2	R2	MS165-20	30.3	1850
17A5-2	R3	MS165-32	30.3	1850
25A0-2	R3	MS165-42	30.3	1850
032A-2	R4	MS165-54	75.0	4577
048A-2	R4	MS5100-100 / MS165-80	75.0	4577
055A-2	R4	MS5100-100 / MS165-80	75.0	4577
3-phase U_N = 480 V				
01A8-4	R0	MS132-4.0 & S1-M3-25 [5)]	30.3	1850
02A6-4	R1	MS132-6.3 & S1-M3-25 [5)]	30.3	1850
03A3-4	R1	MS132-6.3 & S1-M3-25 [5)]	30.3	1850
04A0-4	R1	MS132-10 & S1-M3-25 [5)]	30.3	1850
05A6-4	R1	MS132-10 & S1-M3-25 [5)]	30.3	1850

Type ACS380-04xx-…	Frame	MMP type [1) 2) 3)]	Minimum enclosure volume [4)]	
			dm^3	in^3
07A2-4	R1	MS165-16	30.3	1850
09A4-4	R1	MS165-16	30.3	1850
12A6-4	R2	MS165-20	30.3	1850
17A0-4	R3	MS165-32	30.3	1850
25A0-4	R3	MS165-42	30.3	1850
032A-4	R4	MS165-54	75.0	4577
038A-4	R4	MS165-65	75.0	4577
045A-4	R4	MS5100-100 / MS165-73	75.0	4577
050A-4	R4	MS5100-100 / MS165-80	75.0	4577

1) All manual motor protectors listed are Type E self-protected up to 65 kA, except MS165-80 which is Type E self-protected up to 50 kA. See the ABB manual motor starter catalog (1SBC100214C0201) for complete technical data on the ABB Type E manual motor protectors. In order for these manual motor protectors to be used for branch circuit protection, they must be UL listed Type E manual motor protectors, otherwise they can be used only as an At Motor Disconnect. “At Motor Disconnect” is a disconnect just ahead of the motor on the load side of the panel.

2) 480Y/277 V delta systems only: Short-circuit protective devices with slash voltage ratings (e.g. 480Y/277 V AC) can be applied only in solidly grounded networks where the voltage from line-to-ground does not exceed the lower of the two ratings (e.g. 277 V AC), and the voltage from line-to-line does not exceed the higher of the two ratings (e.g. 480 V AC). The lower rating represents the device’s interrupting capability per pole.

3) Manual motor protectors may require adjusting the trip limit from the factory setting at or above the drive input Amps to avoid nuisance tripping. If the manual motor protector is set to the maximum current trip level and nuisance tripping is occurring, select the next size MMP. (MS132-10 is the highest size in the MS132 frame size to meet Type E at 65 kA; the next size up is MS165-16.)

4) For all drives, the enclosure must be sized to accommodate the specific thermal considerations of the application as well as provide free space for cooling. Refer to the technical data. For UL only: The minimum enclosure volume is specified in the UL listing when applied with the ABB Type E MMP shown in the table. Fuses must be used for wall-mounted drives installed with a UL Type 1 kit.

5) Requires the use of the S1-M3-25 line side feeder terminal with the manual motor protector to meet Type E self-protection class.

Dimensions and weights

Frame size	Dimensions and weights (IP20 / UL open type)															
	H1		H2		H3		W		D1		M1		M2		Weight	
	mm	in	mm	in	mm	in	mm	in	mm	in	mm	in	mm	in	kg	lb
R0	205	8.1	223	8.8	170	6.7	70	2.8	176	6.9	50	1.97	191	7.52	1.4	3.1
R1	205	8.1	223	8.8	170	6.7	70	2.8	176	6.9	50	1.97	191	7.52	1.4	3.1
R2	205	8.1	223	8.8	170	6.7	95	3.7	176	6.9	75	2.95	191	7.52	2.0	4.4
R3	205	8.1	223	8.8	170	6.7	170	6.7	176	6.9	148	5.83	191	7.52	3.3	7.3
R4	205	8.1	240	9.5	170	6.7	260	10.2	176	6.9	234	9.21	191	7.52	5.3	11.7

Frame size	Dimensions and weights (drive with UL Type 1 kit)															
	H1		H2		H3		W		D1		M1		M2		Weight [1]	
	mm	in	mm	in	mm	in	mm	in	mm	in	mm	in	mm	in	kg	lb
R0	205	8.1	285	11.2	247	9.7	70	2.8	191	7.5	50	1.97	191	7.52	0.4	1
R1	205	8.1	293	11.5	247	9.7	70	2.8	191	7.5	50	1.97	191	7.52	0.4	1
R2	205	8.1	293	11.5	247	9.7	95	3.7	191	7.5	75	2.95	191	7.52	0.5	1.1
R3	205	8.1	329	13.0	261	10.3	170	6.7	191	7.5	148	5.83	191	7.52	0.7	1.5
R4	205	8.1	391	15.3	312	12.3	260	10.2	196	7.7	234	9.21	191	7.52	1.2	2.7

[1] Additional weight of the UL Type 1 kit.

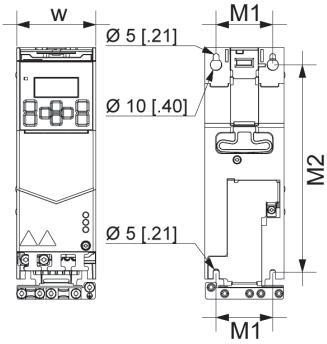

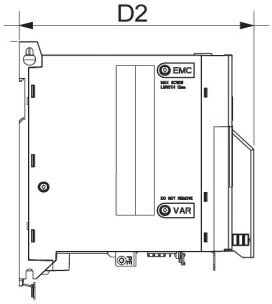

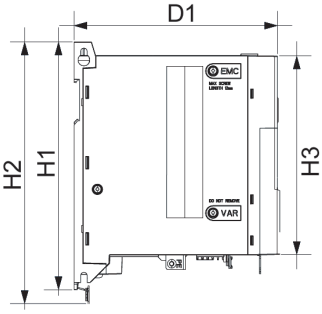

H1	Height back
H2	Height
H3	Height front
W	Width
D1	Depth
D2	Depth (with BIO-01 high cover)
M1	Mounting hole distance
M2	Mounting hole distance

Note: The BIO-01 high cover adds 15 mm (0.6 in) to the depth (D1) of the drive.

Free space requirements

Frame	Free space requirement					
	Above [1]		Below		Sides [2]	
	mm	in	mm	in	mm	in
All	75	3	75	3	0	0

[1] Drives with the optional UL Type 1 kit: 50 mm (2 in), measured from the top of the hood.
[2] A side-mounted option module requires 20 mm (0.8 in) of free space on the right side of the drive.

Losses, cooling data and noise

Drives with frame size R0 have natural convection cooling. Drives with frame size R1…R4 have a cooling fan. The air flow direction is from bottom to top.

Type ACS380-04xx-…	Typical power loss [1]		Air flow		Noise	Frame size
	W	BTU/h	m^3/h	CFM	dB(A)	
1-phase U_N = 230 V						
02A4-1	33	113	-	-	< 30	R0
03A7-1	49	167	-	-	< 30	R0
04A8-1	67	229	57	33	63	R1
06A9-1	93	317	57	33	63	R1
07A8-1	106	362	57	33	63	R1
09A8-1	92	314	63	37	59	R2
12A2-1	115	392	63	37	59	R2
3-phase U_N = 230 V						
02A4-2	39	133	57	33	63	R1
03A7-2	57	194	57	33	63	R1
04A8-2	72	246	57	33	63	R1
06A9-2	111	379	57	33	63	R1
07A8-2	105	358	57	33	63	R1
09A8-2	140	478	57	33	63	R1
12A2-2	149	508	63	37	59	R2
17A5-2	265	904	128	75	66	R3
25A0-2	398	1358	128	75	66	R3
032A-2	350	1194	150	88	69	R4
048A-2	561	1914	150	88	69	R4
055A-2	676	2307	150	88	69	R4
3-phase U_N = 400/480 V						
01A8-4	28	96	-	-	<30	R0
02A6-4	44	150	57	33	63	R1
03A3-4	55	188	57	33	63	R1

Type ACS380-04xx-…	Typical power loss [1]		Air flow		Noise	Frame size
	W	BTU/h	m^3/h	CFM	dB(A)	
04A0-4	62	212	57	33	63	R1
05A6-4	91	311	57	33	63	R1
07A2-4	100	341	57	33	63	R1
09A4-4	140	478	57	33	63	R1
12A6-4	165	563	63	37	59	R2
17A0-4	259	884	128	75	66	R3
25A0-4	390	1331	128	75	66	R3
032A-4	396	1351	150	88	69	R4
038A-4	497	1696	150	88	69	R4
045A-4	582	1986	150	88	69	R4
050A-4	672	2293	150	88	69	R4

[1] Typical drive losses when it operates at 90% of the motor nominal frequency and 100% of the drive nominal output current.

Typical power cable sizes

The table in this section gives the typical power cable and conductor sizes for use at the nominal drive current.

Note: IEC/EN 61800-5-1 requires two separate PE (ground) conductors for a fixed connection, if the cross-sectional area of the PE conductor is less than 10 mm^2 Cu.

Type ACS380-04xx-…	Cable size, Cu (mm^2) [1]	Conductor size, Cu (AWG)	Frame size
1-phase U_N = 230 V			
02A4-1	3×1.5 + 1.5	16	R0
03A7-1	3×1.5 + 1.5	16	R0
04A8-1	3×1.5 + 1.5	16	R1
06A9-1	3×1.5 + 1.5	16	R1
07A8-1	3×1.5 + 1.5	16	R1
09A8-1	3×2.5 + 2.5	14	R2
12A2-1	3×2.5 + 2.5	14	R2
3-phase U_N = 230 V			
02A4-2	3×1.5 + 1.5	16	R1
03A7-2	3×1.5 + 1.5	16	R1
04A8-2	3×1.5 + 1.5	16	R1
06A9-2	3×1.5 + 1.5	16	R1
07A8-2	3×1.5 + 1.5	16	R1
09A8-2	3×2.5 + 2.5	14	R1

Type ACS380-04xx-…	Cable size, Cu (mm^2) [1]	Conductor size, Cu (AWG)	Frame size
12A2-2	3×2.5 + 2.5	14	R2
17A5-2	3×6 + 6	10	R3
25A0-2	3×6 + 6	10	R3
032A-2	3×10 + 10	8	R4
048A-2	3×25 + 16	4	R4
055A-2	3×25 + 16	4	R4
3-phase U_N = 400 V or 480 V			
01A8-4	3×1.5 + 1.5	16	R0
02A6-4	3×1.5 + 1.5	16	R1
03A3-4	3×1.5 + 1.5	16	R1
04A0-4	3×1.5 + 1.5	16	R1
05A6-4	3×1.5 + 1.5	16	R1
07A2-4	3×1.5 + 1.5	16	R1
09A4-4	3×2.5 + 2.5	14	R1
12A6-4	3×2.5 + 2.5	14	R2
17A0-4	3×6 + 6	10	R3
25A0-4	3×6 + 6	10	R3
032A-4	3×10 + 10	8	R4
038A-4	3×16 + 16	6	R4
045A-4	3×25 + 16	4	R4
050A-4	3×25 + 16	4	R4

[1] Symmetrical, shielded, three-phase copper cable.

Terminal data for the power cables

The first table shows the terminal data in SI units. The second table shows the terminal data in imperial units.

Type ACS380-04xx-…	L1, L2, L3, T1/U, T2/V, T3/W, R-, R+/UDC+			PE		
	Minimum (solid/stranded)	Maximum (solid/stranded)	Tightening torque	Minimum (solid/stranded)	Maximum (solid/stranded)	Tightening torque
	mm^2	mm^2	N·m	mm^2	mm^2	N·m
1-phase U_N = 230 V						
02A4-1	0.5/0.5	4/2.5	0.5…0.6	4/2.5	6/4	1.2
03A7-1	0.5/0.5	4/2.5	0.5…0.6	4/2.5	6/4	1.2
04A8-1	0.5/0.5	4/2.5	0.5…0.6	4/2.5	6/4	1.2
06A9-1	0.5/0.5	4/2.5	0.5…0.6	4/2.5	6/4	1.2

Type ACS380-04xx-…	L1, L2, L3, T1/U, T2/V, T3/W, R-, R+/UDC+			PE		
	Minimum (solid/stranded)	Maximum (solid/stranded)	Tightening torque	Minimum (solid/stranded)	Maximum (solid/stranded)	Tightening torque
	mm^2	mm^2	N·m	mm^2	mm^2	N·m
07A8-1	0.5/0.5	4/2.5	0.5…0.6	4/2.5	6/4	1.2
09A8-1	0.5/0.5	4/2.5	0.5…0.6	4/2.5	6/4	1.2
12A2-1	0.5/0.5	4/2.5	0.5…0.6	4/2.5	6/4	1.2
3-phase U_N = 230 V						
02A4-2	0.5/0.5	4/2.5	0.5…0.6	4/2.5	6/4	1.2
03A7-2	0.5/0.5	4/2.5	0.5…0.6	4/2.5	6/4	1.2
04A8-2	0.5/0.5	4/2.5	0.5…0.6	4/2.5	6/4	1.2
06A9-2	0.5/0.5	4/2.5	0.5…0.6	4/2.5	6/4	1.2
07A8-2	0.5/0.5	4/2.5	0.5…0.6	4/2.5	6/4	1.2
09A8-2	0.5/0.5	4/2.5	0.5…0.6	4/2.5	6/4	1.2
12A2-2	0.5/0.5	4/2.5	0.5…0.6	4/2.5	6/4	1.2
17A5-2	0.5/0.5	10/6	1.2…1.5	4/2.5	6/4	1.2
25A0-2	0.5/0.5	10/6	1.2…1.5	4/2.5	6/4	1.2
032A-2	0.5/0.5	25/16	2.5…3.7	10/6	25/16	2.9
048A-2	0.5/0.5	25/16	2.5…3.7	10/6	25/16	2.9
055A-2	0.5/0.5	25/16	2.5…3.7	10/6	25/16	2.9
3-phase U_N = 400 V						
01A8-4	0.5/0.5	4/2.5	0.5…0.6	4/2.5	6/4	1.2
02A6-4	0.5/0.5	4/2.5	0.5…0.6	4/2.5	6/4	1.2
03A3-4	0.5/0.5	4/2.5	0.5…0.6	4/2.5	6/4	1.2
04A0-4	0.5/0.5	4/2.5	0.5…0.6	4/2.5	6/4	1.2
05A6-4	0.5/0.5	4/2.5	0.5…0.6	4/2.5	6/4	1.2
07A2-4	0.5/0.5	4/2.5	0.5…0.6	4/2.5	6/4	1.2
09A4-4	0.5/0.5	4/2.5	0.5…0.6	4/2.5	6/4	1.2
12A6-4	0.5/0.5	4/2.5	0.5…0.6	4/2.5	6/4	1.2
17A0-4	0.5/0.5	10/6	1.2…1.5	4/2.5	6/4	1.2
25A0-4	0.5/0.5	10/6	1.2…1.5	4/2.5	6/4	1.2
032A-4	0.5/0.5	25/16	2.5…3.7	10/6	25/16	2.9
038A-4	0.5/0.5	25/16	2.5…3.7	10/6	25/16	2.9
045A-4	0.5/0.5	25/16	2.5…3.7	10/6	25/16	2.9
050A-4	0.5/0.5	25/16	2.5…3.7	10/6	25/16	2.9

Type ACS380-04xx-…	L1, L2, L3, T1/U, T2/V, T3/W, R-, R+/UDC+			PE		
	Minimum	Maximum	Tightening torque	Minimum	Maximum	Tightening torque
	AWG	AWG	lbf·in	AWG	AWG	lbf·in
1-phase U_N = 230 V						
02A4-1	18	10	5	12	10	10.6
03A7-1	18	10	5	12	10	10.6
04A8-1	18	10	5	12	10	10.6
06A9-1	18	10	5	12	10	10.6
07A8-1	18	10	5	12	10	10.6
09A8-1	18	10	5	12	10	10.6
12A2-1	18	10	5	12	10	10.6
3-phase U_N = 230 V						
02A4-2	18	10	5	12	10	10.6
03A7-2	18	10	5	12	10	10.6
04A8-2	18	10	5	12	10	10.6
06A9-2	18	10	5	12	10	10.6
07A8-2	18	10	5	12	10	10.6
09A8-2	18	10	5	12	10	10.6
12A2-2	18	10	5	12	10	10.6
17A5-2	18	6	11…13	12	10	10.6
25A0-2	18	6	11…13	12	10	10.6
032A-2	18	2	22…32	8	4	25.7
048A-2	18	2	22…32	8	4	25.7
055A-2	18	2	22…32	8	4	25.7
3-phase U_N = 480 V						
01A8-4	18	10	5	12	10	10.6
02A6-4	18	10	5	12	10	10.6
03A3-4	18	10	5	12	10	10.6
04A0-4	18	10	5	12	10	10.6
05A6-4	18	10	5	12	10	10.6
07A2-4	18	10	5	12	10	10.6
09A4-4	18	10	5	12	10	10.6
12A6-4	18	10	5	12	10	10.6
17A0-4	18	6	11…13	12	10	10.6
25A0-4	18	6	11…13	12	10	10.6
032A-4	18	2	22…32	8	4	25.7
038A-4	18	2	22…32	8	4	25.7
045A-4	18	2	22…32	8	4	25.7
050A-4	18	2	22…32	8	4	25.7

Note:

- The minimum specified wire size does not necessarily have sufficient current carrying capacity at maximum load.
- The terminals do not accept a conductor that is one size larger than the maximum specified wire size.
- The maximum number of conductors per terminal is 1.

Terminal data for the control cables

This table shows the control cable terminal data of the standard drive variant, that is, the base unit with BMIO-01 I/O & Modbus module.

Wire size		Torque	
mm^2	**AWG**	**N·m**	**lbf·in**
0.14…1.5	26…16	0.5…0.6	4.4…5.3

External EMC filters

The table shows the external EMC filters. See also *EMC compatibility and motor cable length* and *EMC compliance (IEC/EN 61800-3:2004 + A1:2012) (page 159)*.

Type ACS380-04xx-…	EMC filter type	
	ABB order code	**Schaffner order code**
1-phase U_N = 230 V		
02A4-1	RFI-11	FS 21754-6.1-07
03A7-1	RFI-12	FS 21754-16.1-07
04A8-1	RFI-12	FS 21754-16.1-07
06A9-1	RFI-12	FS 21754-16.1-07
07A8-1	RFI-12	FS 21754-16.1-07
3-phase U_N = 230 V		
02A4-2	RFI-32	FN 3258-16-44
03A7-2	RFI-32	FN 3258-16-44
04A8-2	RFI-32	FN 3258-16-44
06A9-2	RFI-32	FN 3258-16-44
07A8-2	RFI-32	FN 3258-16-44
09A8-2	RFI-32	FN 3258-16-44
12A2-2	RFI-33	FN 3258-30-33
17A5-2	RFI-33	FN 3258-30-33
25A0-2	RFI-33	FN 3258-30-33
032A-2	RFI-34	FN 3258-100-35
048A-2	RFI-34	FN 3258-100-35

Type ACS380-04xx-…	EMC filter type	
	ABB order code	Schaffner order code
055A-2	RFI-34	FN 3258-100-35
3-phase U_N = 400 V		
01A8-4	RFI-32	FN 3258-16-44
02A6-4	RFI-32	FN 3258-16-44
03A3-4	RFI-32	FN 3258-16-44
04A0-4	RFI-32	FN 3258-16-44
05A6-4	RFI-32	FN 3258-16-44
07A2-4	RFI-32	FN 3258-16-44
09A4-4	RFI-32	FN 3258-16-44
12A6-4	RFI-33	FN 3258-30-33
17A0-4	RFI-33	FN 3258-30-33
25A0-4	RFI-33	FN 3258-30-33
032A-4	RFI-34	FN 3258-100-35
038A-4	RFI-34	FN 3258-100-35
045A-4	RFI-34	FN 3258-100-35
050A-4	RFI-34	FN 3258-100-35

If you use an external EMC filter, you must disconnect the internal EMC filter. Refer to the electrical installation instructions.

Electrical power network specification

Voltage (U1)	**Input voltage range:** ACS380-04xx-xxxx-1 drives: 1-phase 200 … 240 V AC -15% … +10% ACS380-04xx-xxxx-2 drives: 3-phase 200 … 240 V AC -15% … +10% ACS380-04xx-xxxx-4 drives: 3-phase 380 … 480 V AC -15% … +10%
Network type	Public low voltage networks. Symmetrically grounded TN-S system, IT (ungrounded), corner-grounded delta. Consult ABB before connecting to other systems (for example, TT, or midpoint grounded delta).
Rated conditional short-circuit current (IEC 61800-5-1)	65 kA when protected by fuses given in the fuse tables.
Short-circuit current protection (UL 61800-5-1, CSA C22.2 No. 274-13)	US and Canada: The drive is suitable for use on a circuit capable of delivering not more than 100 kA symmetrical amperes (rms) at 480 V maximum when protected by fuses given in the fuse table.

<table>
<tr><td>Input choke</td><td>Use an input choke, if the short-circuit capacity of the network at the drive terminals is more than specified in this table:
<table>
<tr><th>Input voltage</th><th>R0, R1, R2</th><th>R3, R4</th></tr>
<tr><td>1-phase 200 … 240 V</td><td>>1.5 kA</td><td>-</td></tr>
<tr><td>3-phase 200 … 240 V</td><td>>5.0 kA</td><td>>7.5 kA</td></tr>
<tr><td>3-phase 380 … 480 V</td><td>>5.0 kA</td><td>>10 kA</td></tr>
</table>
You can use one choke for several drives if the short-circuit capacity at the drive terminals is decreased to the value in the table.</td></tr>
<tr><td>Frequency (f1)</td><td>47 … 63 Hz, maximum rate of change 2%/s</td></tr>
<tr><td>Imbalance</td><td>Max. ±3% of nominal phase to phase input voltage</td></tr>
<tr><td>Fundamental power factor (cos phi)</td><td>0.98 (at nominal load)</td></tr>
</table>

Motor connection data

Motor type	Asynchronous AC induction motors, permanent magnet synchronous motors or ABB synchronous reluctance motors (SynRM motors)
Voltage (U2)	0 … U1, 3-phase symmetrical
Short-circuit protection (IEC 61800-5-1, UL 61800-5-1)	The motor output is short-circuit proof by IEC 61800-5-1 and UL 61800-5-1.
Frequency (f2)	0 … 599 Hz
Frequency resolution	0.01 Hz
Current	See the electrical ratings given in this manual.
Switching frequency	2, 4, 8, or 12 kHz

Motor cable length

Operational functionality and motor cable length

The drive is designed to operate with optimum performance with these maximum motor cable lengths. The values are valid for 4 kHz switching frequency.

Note: Conducted and radiated emissions of these motor cable lengths do not comply with the EMC requirements of IEC/EN 61800-3.

Frame	Maximum motor cable length	
	m	ft
Standard drive, without external options		
R0…R4	100	328

Note: In multimotor systems, the calculated sum of all motor cable lengths must not exceed the maximum motor cable length given in the table.

EMC compatibility and motor cable length

To comply with the EMC requirements of IEC/EN 61800-3, do not exceed these maximum motor cable lengths. The values are valid for 4 kHz switching frequency.

Frame	Maximum motor cable length, 4 kHz					
	C1 [1]		C2		C3	
	m	ft	m	ft	m	ft
With internal EMC filter						
1-phase 200 … 240 V (ACS380-042x)						
R0	-	-	10	33	10	33
R1	-	-	10	33	10	33
R2	-	-	10	33	10	33
3-phase 380 … 480 V (C2: ACS380-042x, C3: ACS380-040x)						
R0	-	-	10	33	30	98
R1	-	-	10	33	30	98
R2	-	-	10	33	20	66
R3	-	-	10	33	30	98
R4	-	-	10	33	30	98
With optional external EMC filter						
1-phase 200 … 240 V (ACS380-040x)						
R0	10	33	10	33	10	33
R1	10	33	10	33	10	33
R2	-	-	-	-	-	-
3-phase 200 … 240 V (ACS380-040x)						
R1	-	-	20	66	20	66
R2	-	-	20	66	20	66
R3	-	-	20	66	20	66
R4	-	-	20	66	20	66
3-phase 380 … 480 V (ACS380-040x)						
R0	30	98	30	98	30	98
R1	40	131	40	131	40	131
R2	40	131	40	131	40	131
R3	40	131	40	131	40	131
R4	30	98	30	98	30	98

[1] Category C1 with conducted emissions only. Radiated emissions are not compatible when measured with the standard emission measurement setup and must be measured on cabinet and machine installations for each case.

Note: Radiated emissions are according to C2 with ACS380-042x drives. For ACS380-040x drives, use a metal enclosure to fulfill radiated emissions C2 limits with an external EMC filter.

Control connection data

Analog inputs (AI1, AI2)	Voltage signal, single-ended	0 … 10 V DC (10% overrange, 11 V DC max.) R_{in} = 221.6 kohm
	Current signal, single-ended	0 … 20 mA (10% overrange, 22 mA max.) R_{in} = 137 ohm
	Inaccuracy	≤ 1.0%, of full scale
	Overvoltage protection	up to 30 V DC
	Potentiometer reference value	10 V DC ±1%, max. load current 10 mA
Analog output (AO)	Current output mode	0 … 20 mA (10% overrange, 22 mA max.) into 500 ohm load
	Voltage output mode	0 … 10 V DC (10% overrange, 11 V DC max.) into 200 kohm minimum load (resistive)
	Inaccuracy	≤ 1.0%, of full scale
Auxiliary voltage output/optional input (+24V)	As output	+24 V DC ±10%, max. 250 mA
	As input (optional)	+24 V DC ±10%, max. 1000 mA (incl internal fan load)
Digital inputs (DI1…DI5)	Voltage	12 … 24 V DC (int. or ext. supply) Max. 30 V DC.
	Type	PNP and NPN
	Input impedance	R_{in} = 2 kohm
Programmable digital I/O (DIO1, DIO2)	**As inputs**	
	Voltage	12 … 24 V DC with internal or external supply. Max. 30 V DC.
	Type	PNP and NPN
	Input impedance	R_{in} = 2 kohm
	As outputs	
	Type	Transistor output PNP
	Max. switching voltage	30 V DC
	Max. switching current	70 mA / 30 DC, short-circuit protected
	Frequency	10 Hz … 16 kHz
	Resolution	1 Hz
Relay output (RA, RB, RC)	Type	1 From C (NO + NC)
	Max. switching voltage	250 V AC / 30 V DC
	Max. switching current	2 A
Frequency input (FI)	10 Hz … 16 kHz DI3 and DI4 can be used as digital or frequency inputs.	
Frequency output (FO)	DIO1 and DIO2 can be used as digital or frequency outputs.	
Safe torque off (STO) interface (SGND, S+, S1, S2)	Refer to *The Safe torque off function (page 183)*	

EIA-485 embedded fieldbus (A+, B-, BGND)	Connector pitch 5 mm, maximum wire size 2.5 mm^2 (14 AWG) Physical layer: RS-485 Cable type: Shielded twisted pair cable with twisted pair for data and a wire or pair for signal ground, nominal impedance 100 … 165 ohm, for example Belden 9842 Transmission rate: 9.6 … 115.2 kbit/s Termination by jumper
Control panel - drive connection	EIA-485, male RJ-45 connector, cable type CAT 5e or better, maximum cable length 100 m (328 ft)
Control panel - PC connection	USB Type A – Type Mini-B cable, maximum cable length 3 m (9.8 ft)

Brake resistor connection data

Short-circuit protection (IEC 61800-5-1, IEC 60439-1, UL 61800-5-1)	The brake resistor output is conditionally short-circuit proof by IEC/EN 61800-5-1 and UL 61800-5-1. Rated conditional short-circuit current is as defined in IEC 60439-1.

Energy efficiency data (EU ecodesign)

Energy efficiency data according to IEC 61800-9-2 is available from the ecodesign tool at https://ecodesign.drivesmotors.abb.com/.

Energy efficiency data is not provided for 1-phase 230 V drives. The drives with 1-phase input are not in the scope of the EU ecodesign requirements (Regulation EU 2019/1781).

Protection classes

Degree of protection (IEC/EN 60529)	IP20. The drive must be installed in a cabinet to fulfill the requirements for shielding from contact.
Enclosure types (UL 61800-5-1)	UL open type. For indoor use only. UL Type 1 kit is available as an option.
Overvoltage category (IEC 60664-1)	III
Protective classes (IEC/EN 61800-5-1)	I

Ambient conditions

Environmental limits for the drive are given below. The drive must be used in a heated indoor controlled environment.

Requirement	Operation installed for stationary use	Storage in the protective package	Transportation in the protective package
Installation site altitude	**230 V drives**: 0 … 2000 m (0 … 6562 ft) above sea level (with output derating above 1000 m [3281 ft]) **400/480 V drives**: 0 … 4000 m (0 … 13123 ft) above sea level (with output derating above 1000 m [3281 ft]) See *Output derating (page 131)*.	-	-
Surrounding air temperature	-10 … +60 °C (14 … 140 °F). For frame R0, - 10 … +50 °C (14 … 122 °F). If the temperature is more than 50 °C (122 °F), output derating is necessary. See *Output derating (page 131)*. No frost permitted.	-40 … +70 °C ±2% (-40 … +158 °F ±2%)	-40 … +70 °C ±2% (-40 … +158 °F ±2%)
Relative humidity	5 … 95%	Max. 95%	Max. 95%
	No condensation permitted. Maximum permitted relative humidity is 60% in the presence of corrosive gases.		
Contamination levels (IEC 60721-3-x)	IEC 60721-3-3: 2002	IEC 60721-3-1: 1997	IEC 60721-3-2: 1997
- Chemical gases	Class 3C2	Class 1C2	Class 2C2
- Solid particles	Class 3S2. No conductive dust permitted.	Class 1S3. (packing must support this, otherwise 1S2)	Class 2S2
Pollution degree (IEC/EN 61800-5-1)	Pollution degree 2	-	-

Requirement	Operation installed for stationary use	Storage in the protective package	Transportation in the protective package
Sinusoidal vibration (IEC 60068-2-6, Test Fc 2007-12)	frequency 10 … 150 Hz; amplitude ±0.075 mm (0.003 in), 10 … 57,56 Hz; constant peak acceleration 10 m/s2 (33 ft/s2), 57,56 … 150 Hz; sweep: 1 oct/min; 10 sweep cycles in each axis with STO active; uncertainty ±5.0%; normal mounting	-	-
Shock/(IEC 60068-2-27, ISTA 1A)	Not permitted	According to ISTA 1A. Max. 100 m/s^2 (330 ft/s^2), 11 ms.	According to ISTA 1A. Max. 100 m/s^2 (330 ft/s^2), 11 ms.
Free fall	-	76 cm (30 in)	76 cm (30 in)

Materials

Materials

Drive enclosure	Hot-dip zinc coated steel sheet 1.5 mm (0.06 in). Extruded aluminum AlSi. PC/ABS 2 mm (0.08 in), PC+10%GF 2.5 … 3 mm (0.10 … 0.12 in) and PA66+25%GF 1.5 mm (0.06 in), all in color NCS 1502-Y (RAL 9002 / PMS 420 C)
Package	Corrugated cardboard

Disposal

The main parts of the drive can be recycled to preserve natural resources and energy. Product parts and materials should be dismantled and separated.

Generally all metals, such as steel, aluminum, copper and its alloys, and precious metals can be recycled as material. Plastics, rubber, cardboard and other packaging material can be used in energy recovery. Printed circuit boards and large electrolytic capacitors need selective treatment according to IEC 62635 guidelines. To aid recycling, plastic parts are marked with an appropriate identification code.

Contact your local ABB distributor for further information on environmental aspects and recycling instructions for professional recyclers. End of life treatment must follow international and local regulations.

Applicable standards

The drive complies with the following standards:

EN ISO 13849-1:2015	Safety of machinery – Safety related parts of the control systems – Part 1: general principles for design
EN ISO 13849-2:2012	Safety of machinery – Safety-related parts of the control systems – Part 2: Validation
EN 60204-1:2006 + A1:2009 + AC:2010	Safety of machinery. Electrical equipment of machines. Part 1: General requirements. Provisions for compliance: The final assembler of the machine is responsible for installing • an emergency-stop device • a supply disconnecting device
EN 62061:2005 + AC:2010 + A1:2013 + A2:2015	Safety of machinery – Functional safety of safety-related electrical, electronic and programmable electronic control systems
EN 61800-3:2004 + A1:2012 IEC 61800-3:2004 + A1:2011	Adjustable speed electrical power drive systems. Part 3: EMC requirements and specific test methods
IEC/EN 61800-5-1:2007	Adjustable speed electrical power drive systems – Part 5-1: Safety requirements – Electrical, thermal and energy
IEC 61800-9-2:2017	Adjustable speed electrical power drive systems – Part 9-2: Ecodesign for power drive systems, motor starters, power electronics and their driven applications – Energy efficiency indicators for power drive systems and motor starters
ANSI/UL 61800-5-1:2015	UL Standard for adjustable speed electrical power drive systems – Part 5-1: Safety requirements – Electrical, thermal and energy
CSA C22.2 No. 274-13	Adjustable speed drives

Markings

CE	CE mark Product complies with the applicable European Union legislation. For fulfilling the EMC requirements, see the additional information concerning the drive EMC compliance (IEC/EN 61800-3).
UK CA	UKCA (UK Conformity Assessed) mark Product complies with the applicable United Kingdom's legislation (Statutory Instruments). Marking is required for products being placed on the market in Great Britain (England, Wales and Scotland).
TÜV NORD Safety Approved	TÜV Safety Approved mark (functional safety) Product contains Safe Torque Off and possibly other (optional) safety functions which are certified by TÜV according to the relevant functional safety standards. Applicable to drives and inverters; not applicable to supply, brake or DC/DC converter units or modules.

	UL Listed mark for USA and Canada Product has been tested and evaluated against the relevant North American standards by the Underwriters Laboratories. Valid with rated voltages up to 600 V.
	RCM mark Product complies with Australian and New Zealand requirements specific to EMC, telecommunications and electrical safety. For fulfilling the EMC requirements, see the additional information concerning the drive EMC compliance (IEC/EN 61800-3).
	EAC (Eurasian Conformity) mark Product complies with the technical regulations of the Eurasian Customs Union. EAC mark is required in Russia, Belarus and Kazakhstan.
	Electronic Information Products (EIP) green mark The product complies with *the People's Republic of China Electronic Industry Standard* (SJ/T 11364-2014). The product does not contain toxic and hazardous substances or elements above the maximum concentration values, and it is an environmentally-friendly product which can be recycled.
	WEEE mark At the end of life the product should enter the recycling system at an appropriate collection point and not placed in the normal waste stream.
	KC mark Product complies with Korea's product safety requirements for electrical and electronic equipment and components that utilize power from 50…1000 V AC.

EMC compliance (IEC/EN 61800-3:2004 + A1:2012)

Definitions

EMC stands for Electromagnetic Compatibility. It is the ability of electrical/electronic equipment to operate without problems within an electromagnetic environment. Likewise, the equipment must not disturb or interfere with any other product or system within its locality.

First environment includes establishments connected to a low-voltage network which supplies buildings used for domestic purposes.

Second environment includes establishments connected to a network not supplying domestic premises.

Drive of category C1: drive of rated voltage less than 1000 V and intended for use in the first environment.

Drive of category C2: drive of rated voltage less than 1000 V and intended to be installed and started up only by a professional when used in the first environment.

Note: A professional is a person or organization having necessary skills in installing and/or starting up power drive systems, including their EMC aspects.

Drive of category C3: drive of rated voltage less than 1000 V and intended for use in the second environment and not intended for use in the first environment.

Drive of category C4: drive of rated voltage equal to or above 1000 V, or rated current equal to or above 400 A, or intended for use in complex systems in the second environment.

Category C1

The drive complies with the conducted emission limits of the standard with the following provisions:

1. The optional EMC filter is selected according to section *External EMC filters (page 150)*, and the filter is installed as specified in the EMC filter manual.
2. The motor and control cables are selected as specified in this manual. The EMC recommendations are obeyed.
3. The maximum motor cable length does not exceed the specified maximum value. See *EMC compatibility and motor cable length (page 153)*.
4. The drive is installed according to the instructions given in this manual.

This product can cause radio-frequency inference. In a residential or domestic environment, supplementary mitigation measures may be required in addition to the requirements listed above for the CE compliance.

Category C2

This is applicable to drives with an internal EMC C2 filter.

The drive complies with the standard with the following provisions:

1. The motor and control cables are selected as specified in this manual. The EMC recommendations are obeyed.
2. The maximum motor cable length does not exceed the specified maximum. See *EMC compatibility and motor cable length (page 153)*.
3. The drive is installed according to the instructions given in this manual.

This product can cause radio-frequency inference. In a residential or domestic environment, supplementary mitigation measures may be required in addition to the requirements listed above for the CE compliance.

WARNING!
Do not install a drive with the internal EMC filter connected to a grounding system that the EMC filter is not compatible with (for example, an IT system). The supply network becomes connected to ground potential through the internal EMC filter capacitors, which can cause danger or damage to the drive.

WARNING!
To prevent radio-frequency interference, do not use a category C2 drive on a low-voltage public network that supplies domestic premises.

Category C3

This is applicable to drives with an internal EMC C3 filter.

The drive complies with the standard with the following provisions:

1. The motor and control cables are selected as specified in this manual. The EMC recommendations are obeyed.
2. The maximum motor cable length does not exceed the specified maximum value. See *EMC compatibility and motor cable length (page 153)*.
3. The drive is installed according to the instructions given in this manual.

WARNING!
Do not install a drive with the internal EMC filter connected to a grounding system that the EMC filter is not compatible with (for example, an IT system). The supply network becomes connected to ground potential through the internal EMC filter capacitors, which can cause danger or damage to the drive.

WARNING!
To prevent radio-frequency interference, do not use a category C3 drive on a low-voltage public network that supplies domestic premises.

Category C4

If the provisions in category 1, 2 or 3 are not met, the requirements of the standard can be met as follows:

1. It is ensured that no excessive emission is propagated to neighboring low-voltage networks. In some cases, the inherent suppression in transformers and cables is sufficient. If in doubt, the supply transformer with static screening between the primary and secondary windings can be used.

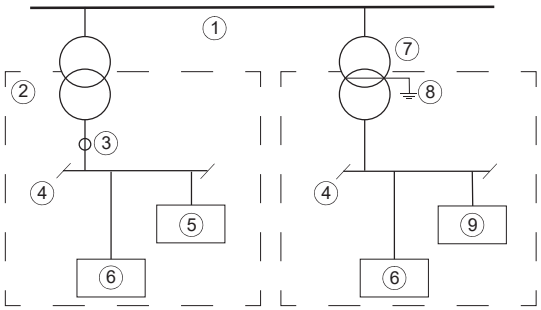

1	Medium voltage network
2	Neighboring network
3	Point of measurement
4	Low voltage
5	Equipment (victim)
6	Equipment
7	Supply transformer
8	Static screen
9	Drive

2. An EMC plan for preventing disturbances is drawn up for the installation. A template is available in *Technical guide No. 3 EMC compliant installation and configuration for a power drive system* (3AFE61348280 [English]).
3. The motor and control cables are selected as specified in this manual. For the best EMC performance, the EMC recommendations are obeyed.
4. The drive is installed according to the instructions given in this manual.

WARNING!
Do not install a drive with the internal EMC filter connected to a grounding system that the EMC filter is not compatible with (for example, an IT system). The supply network becomes connected to ground potential through the internal EMC filter capacitors, which can cause danger or damage to the drive.

WARNING!
To prevent radio-frequency interference, do not use a category C4 drive on a low-voltage public network that supplies domestic premises.

UL checklist

WARNING!
Operation of this drive requires detailed installation and operation instructions provided in the hardware and software manuals. The manuals are provided in electronic format in the drive package or on the Internet. Keep the manuals with the drive at all times. Hard copies of the manuals can be ordered through the manufacturer.

- Make sure that the drive type designation label includes the applicable marking.
- **DANGER - Risk of electric shock.** After disconnecting the input power, always wait for 5 minutes to let the intermediate circuit capacitors discharge before you start working on the drive, motor or motor cable.
- The drive is to be used in a heated, indoor controlled environment. The drive must be installed in clean air according to the enclosure classification. Cooling air must be clean, free from corrosive materials and electrically conductive dust.
- The maximum surrounding air temperature is 50 °C at rated output current. The output current is derated for 50 … 60 °C in drives with frame size R1…R4.
- The drive is suitable for use in a circuit capable of delivering not more than 100000 rms symmetrical amperes, 480 V maximum (480 V drive types) or 240 V maximum (240 V drive types) when protected by the UL fuses given elsewhere in this chapter. The ampere rating is based on tests done according to the appropriate UL standard.
- The drive is suitable for use on a circuit capable of delivering not more than 65000 rms symmetrical amperes, 480Y/277 V maximum (480 V drive types), when protected by a Type E combination motor controller specified by ABB.
- The cables located within the motor circuit must be rated for at least 75 °C in UL-compliant installations.
- The input cable must be protected with UL-rated fuses, or the ABB Type E manual motor protectors (MMP) listed in this manual. The fuses or the manual motor protectors provide branch circuit protection in accordance with the National Electrical Code (NEC) and Canadian Electrical Code. Obey also any other applicable local or provincial codes.

  WARNING!
  The opening of the branch-circuit protective device may be an indication that a fault current has been interrupted. To reduce the risk of fire or electric shock, current-carrying parts and other components of the device should be examined and replaced if damaged.

- The integral solid state short circuit protection of the drive does not provide branch circuit protection.
- The drive provides motor overload protection. For adjustments, see the firmware manual.
- The drive overvoltage category according to IEC 60664-1 is III

Disclaimers

Generic disclaimer

The manufacturer shall have no obligation with respect to any product which (i) has been improperly repaired or altered; (ii) has been subjected to misuse, negligence or accident; (iii) has been used in a manner contrary to the manufacturer’s instructions; or (iv) has failed as a result of ordinary wear and tear.

Cybersecurity disclaimer

This product can be connected to and to communicate information and data via a network interface. The HTTP protocol, which is used between the commissioning tool (Drive Composer) and the product, is an unsecured protocol. For independent and continuous operation of product such connection via network to commissioning tool is not necessary. However it is Customer's sole responsibility to provide and continuously ensure a secure connection between the product and Customer network or any other network (as the case may be). Customer shall establish and maintain any appropriate measures (such as but not limited to the installation of firewalls, prevention of physical access, application of authentication measures, encryption of data, installation of anti-virus programs, etc) to protect the product, the network, its system and the interface against any kind of security breaches, unauthorized access, interference, intrusion, leakage and/or theft of data or information.

Notwithstanding any other provision to the contrary and regardless whether the contract is terminated or not, ABB and its affiliates are under no circumstances liable for damages and/or losses related to such security breaches, any unauthorized access, interference, intrusion, leakage and/or theft of data or information.

11

Dimension drawings

Contents of this chapter

The chapter contains the dimension drawings of the drive. The dimensions are in millimeters and inches.

Note: Drives with the BIO-01 I/O extension module (option +L515) are supplied with a high cover part that increases the depth of the drive by 15 mm (0.6 in.).

Frame R0 (1-phase 230 V)

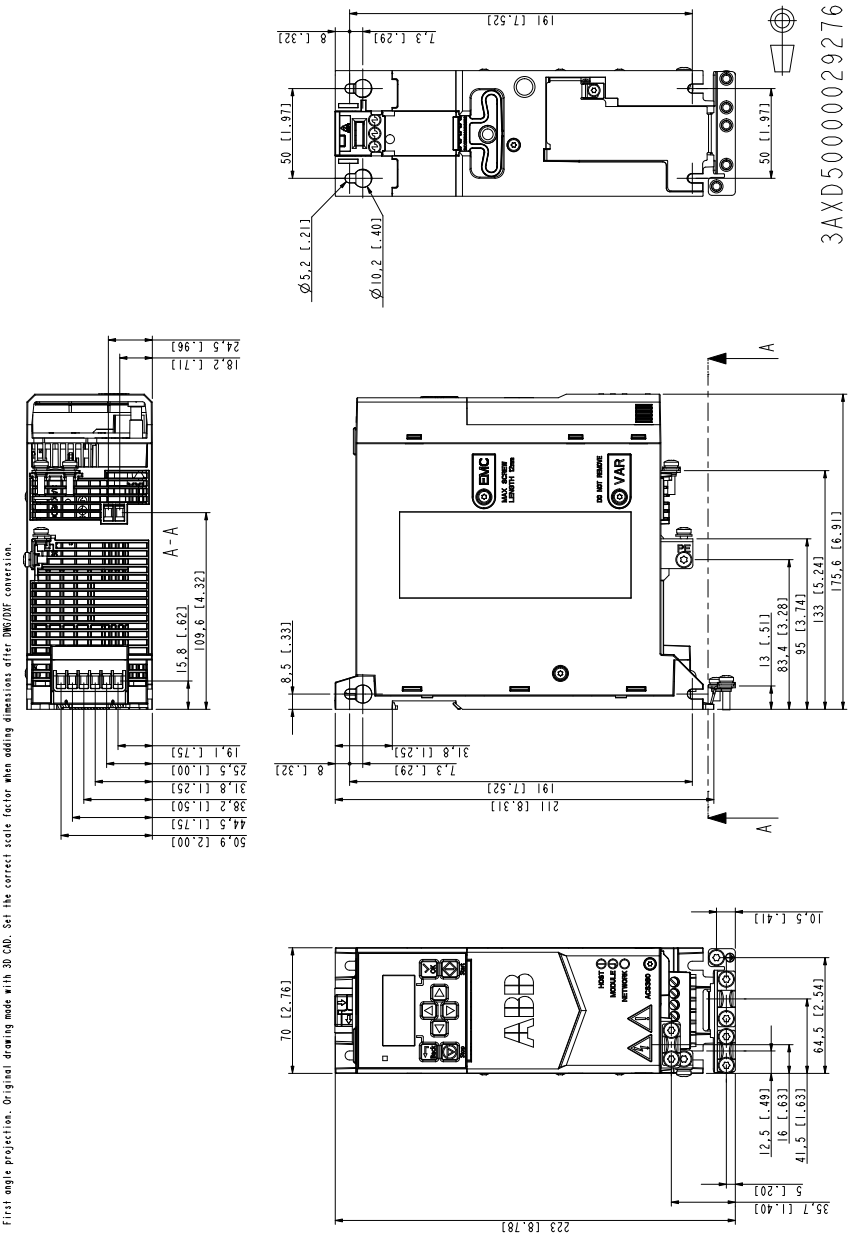

First angle projection. Original drawing made with 3D CAD. Set the correct scale factor when adding dimensions after DWG/DXF conversion.

Frame R0 (400/480 V)

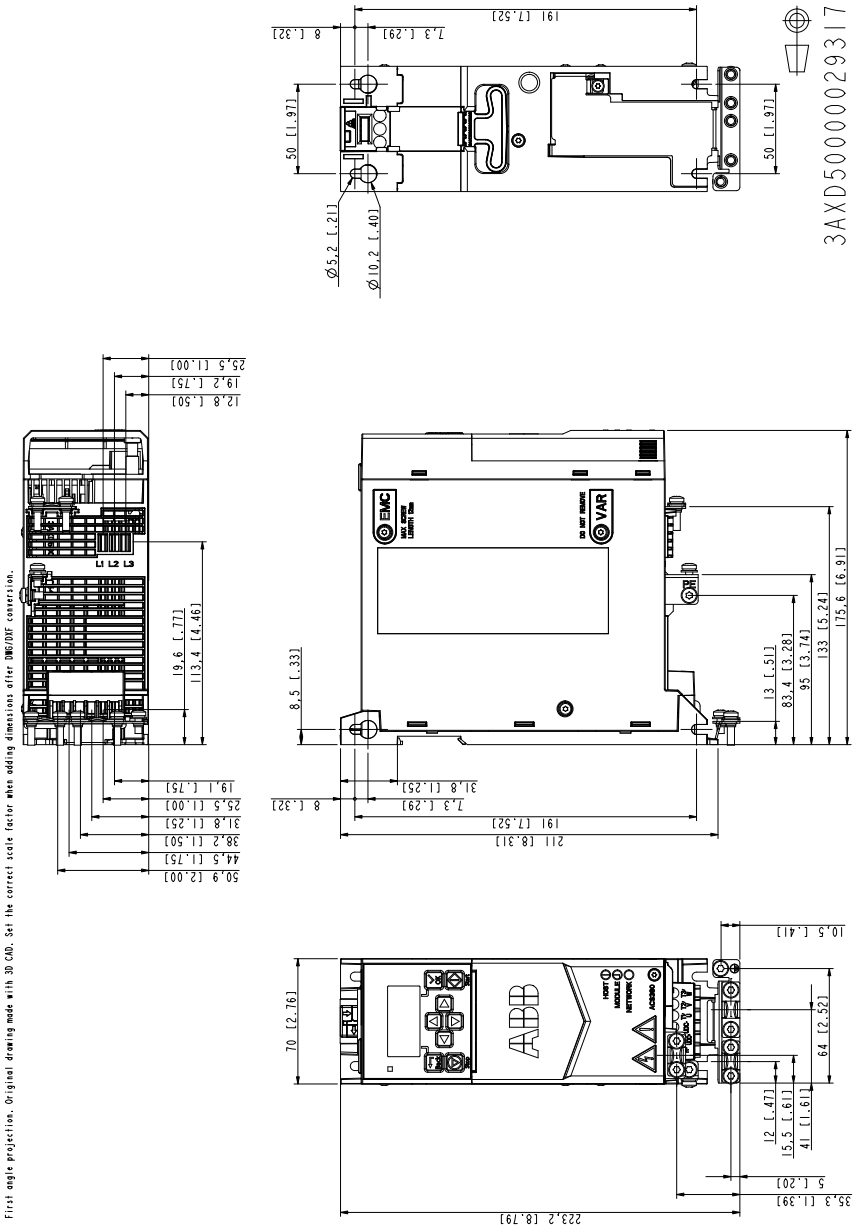

Frame R1 (230 V)

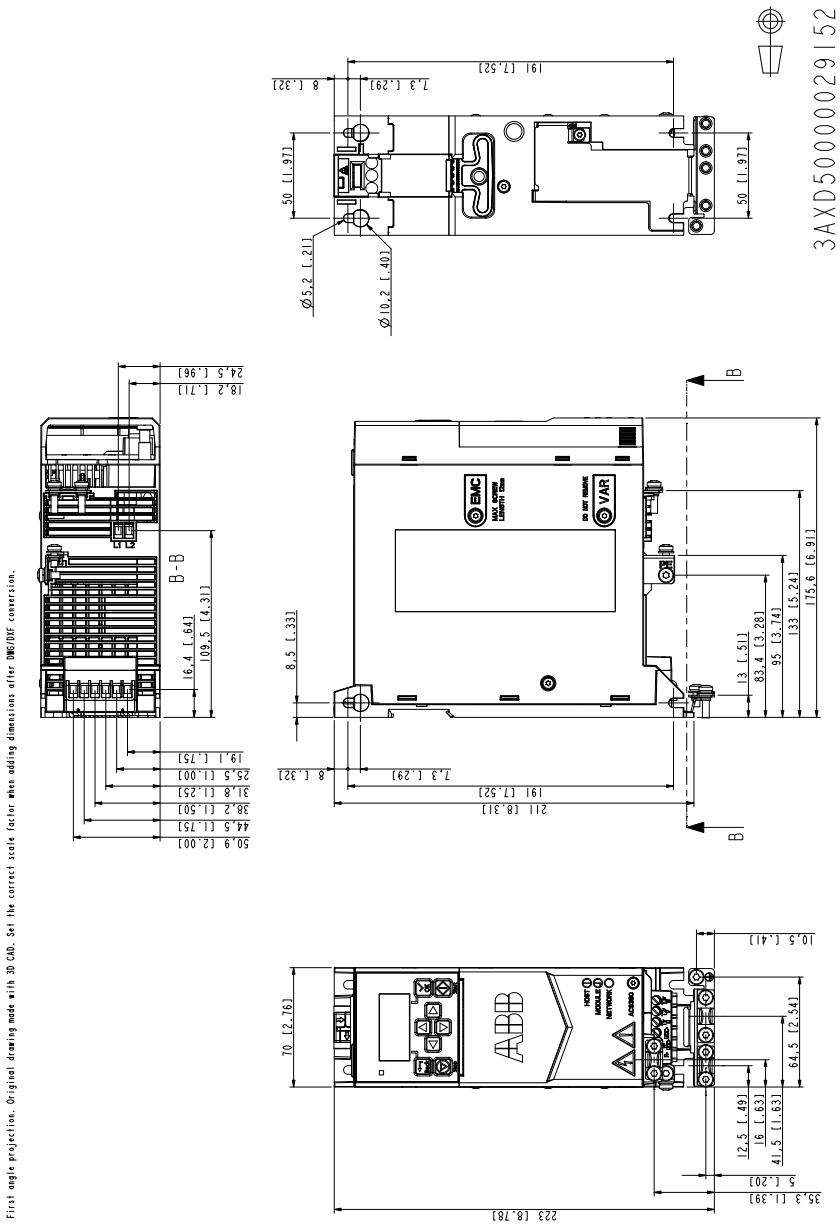

Frame R1 (3-phase 230 V and 3-phase 400/480 V)

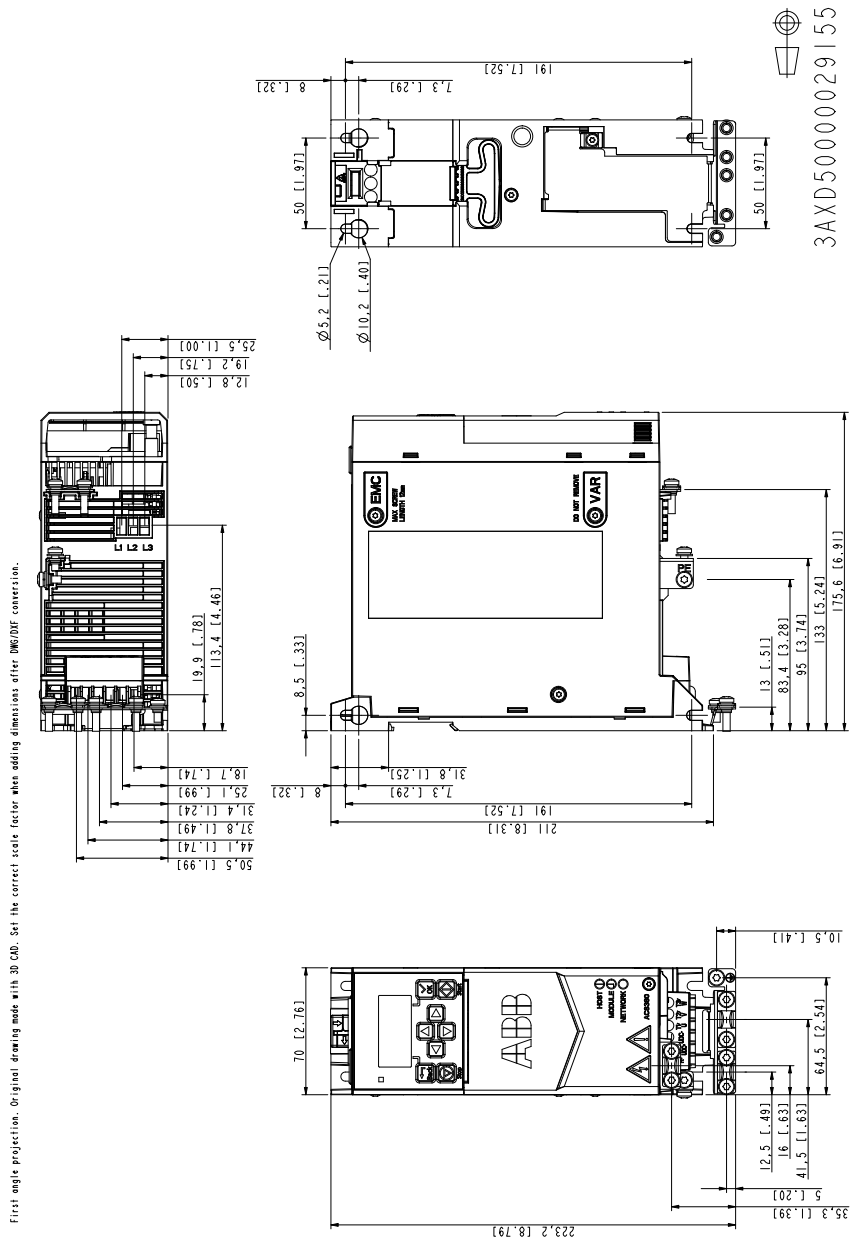

Frame R2 (230 V)

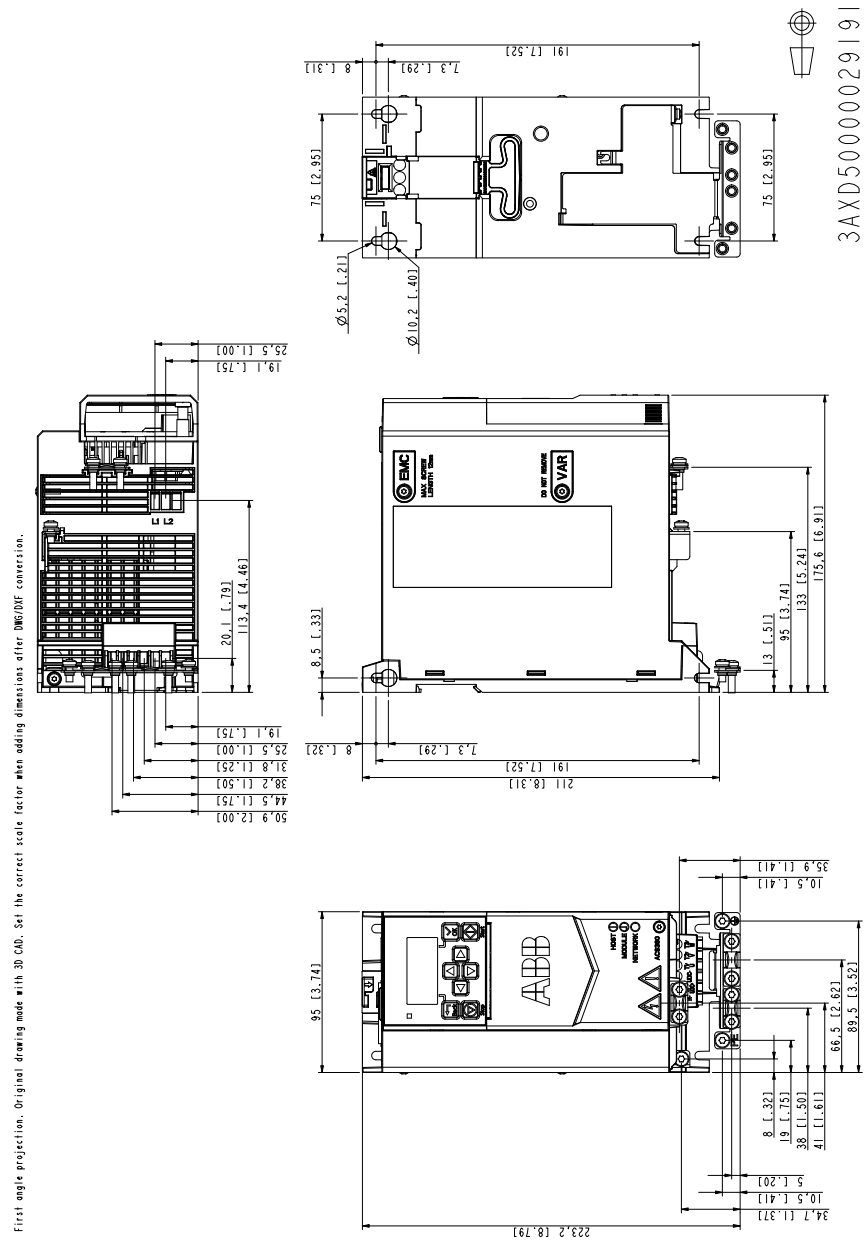

Frame R2 (400/480 V)

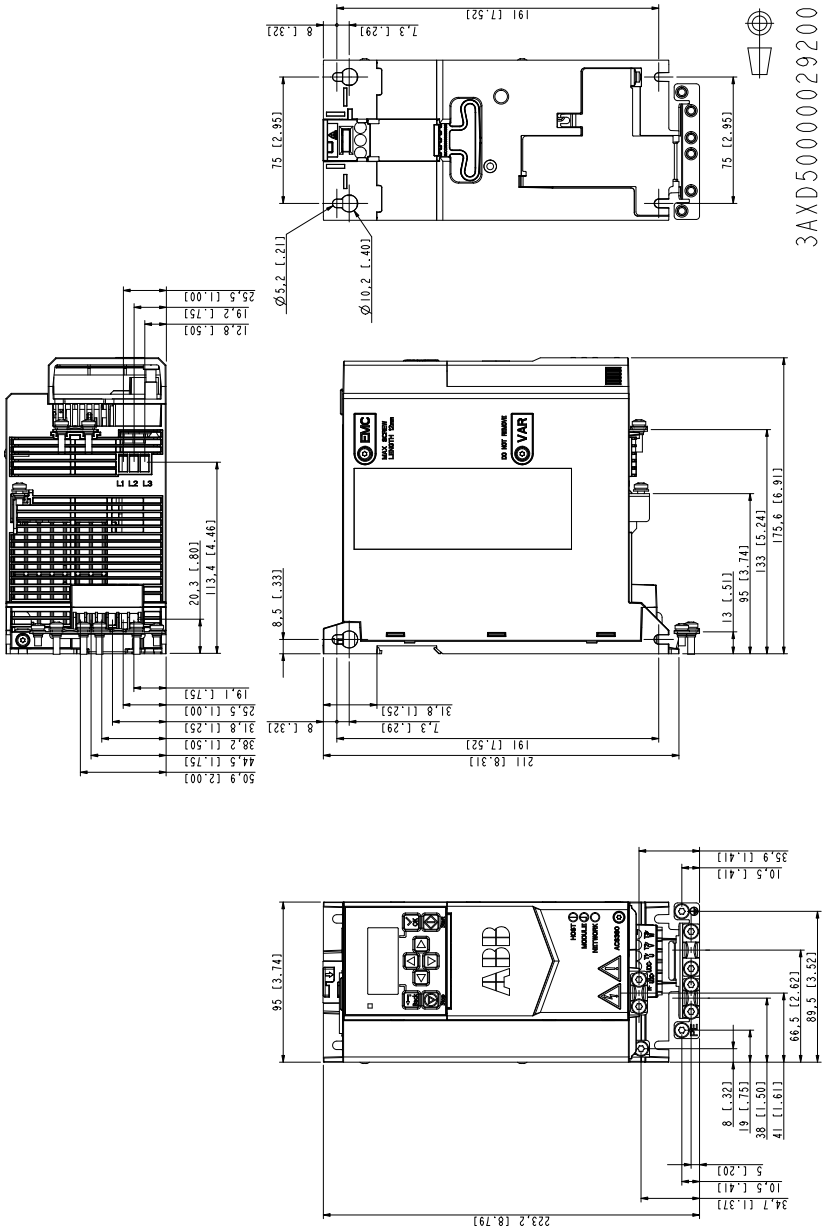

Frame R3 (400/480 V)

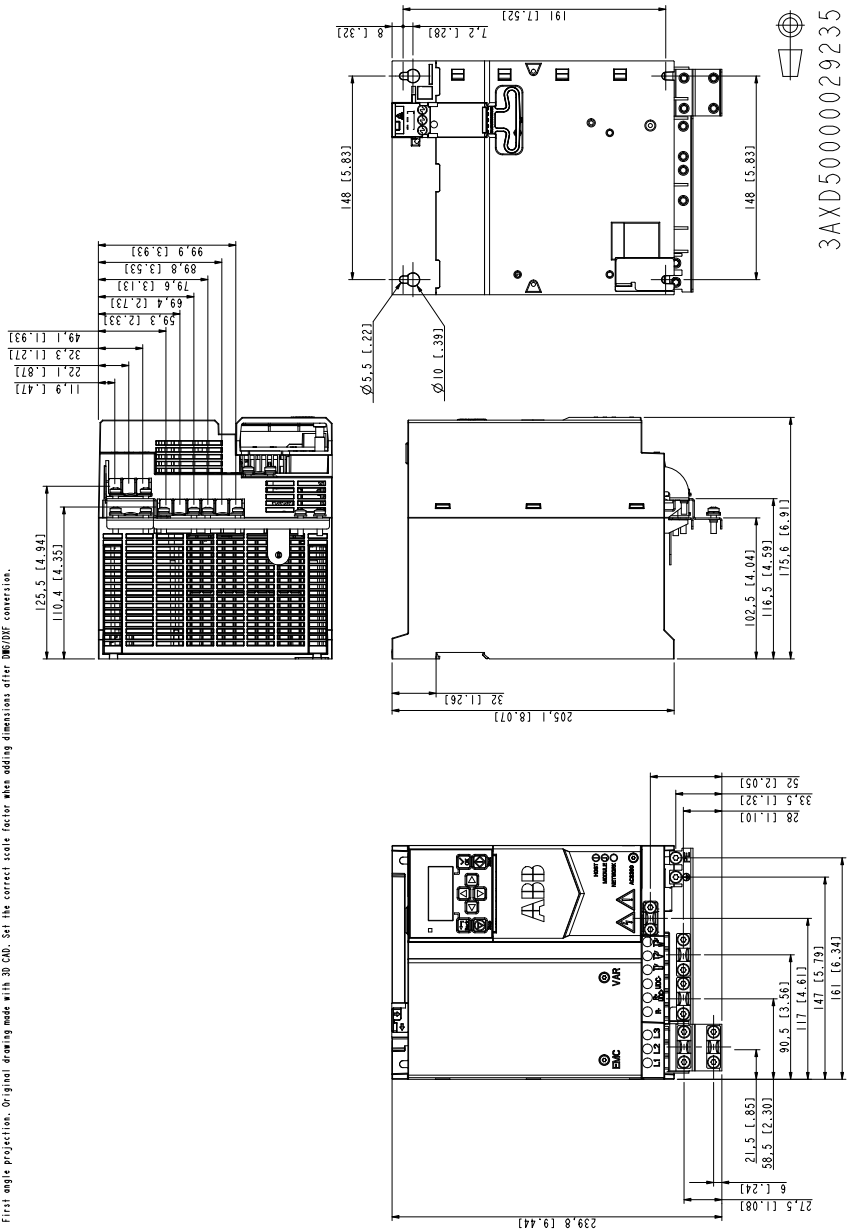

Frame R4 (400/480 V)

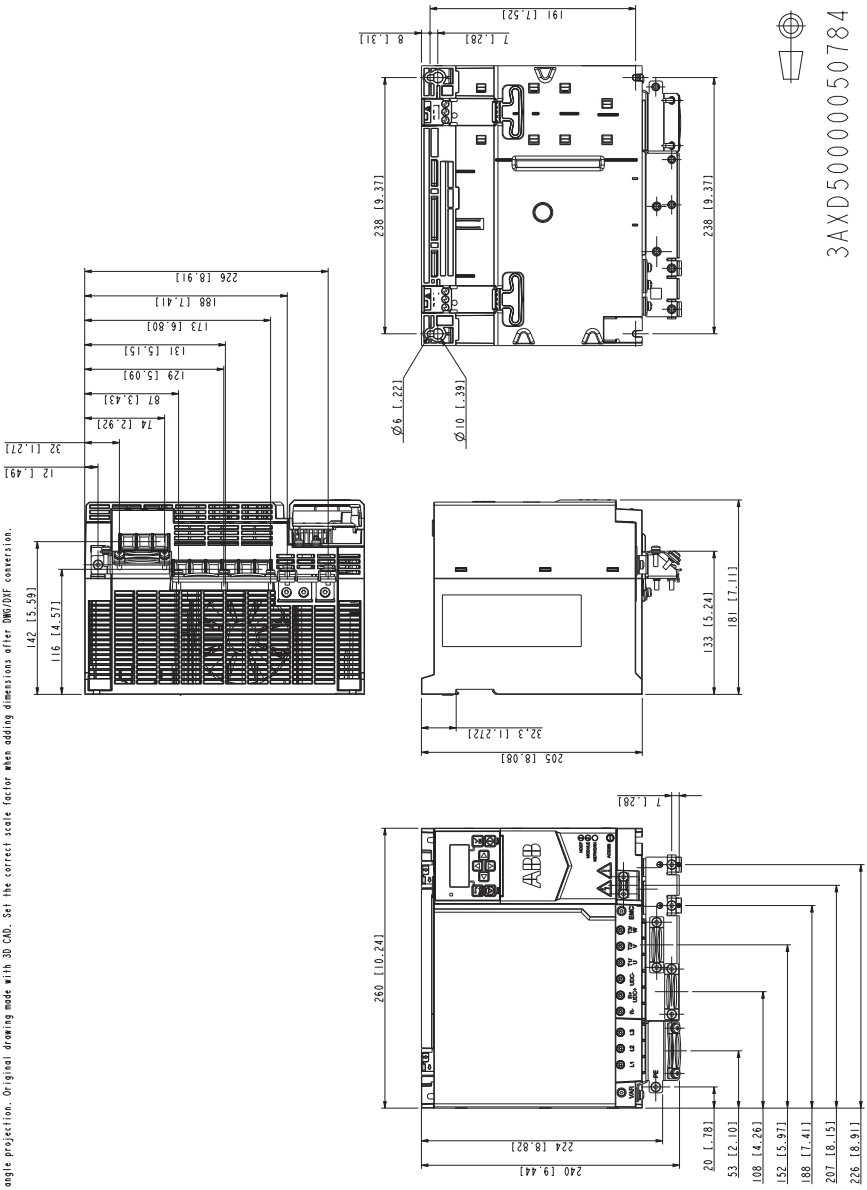

12

Resistor braking

Contents of this chapter

The chapter describes how to select the brake resistor and cables, protect the system, connect the brake resistor and enable resistor braking.

Safety

WARNING!
Do not do work on the brake resistor or the resistor cable when the drive is energized. A dangerous voltage is present in the resistor circuit, even when the brake chopper is not operating, or when it is disabled by a parameter.

Operation principle

The brake chopper handles the energy generated by a decelerating motor. The extra energy increases the DC link voltage. The chopper connects the brake resistor to the intermediate DC circuit whenever the voltage in the circuit exceeds the limit defined by the control program. Energy consumption by the resistor losses lowers the voltage until the resistor can be disconnected.

Selecting the brake resistor

Drives have a built-in brake chopper as standard equipment. The brake resistor is selected using the table and equations shown in this section.

1. Determine the required maximum braking power P_{Rmax} for the application. P_{Rmax} must be smaller than P_{BRmax}. Refer to *Reference brake resistors (page 177)*.

2. Calculate resistance *R* with Equation 1.
3. Calculate energy E_{Rpulse} with Equation 2.
4. Select the resistor so that the following conditions are met:
   - The rated power of the resistor must be greater than or equal to P_{Rmax}.
   - Resistance *R* must be between R_{min} and R_{max} given in the table for the used drive type.
   - The resistor must be able to dissipate energy E_{Rpulse} during the braking cycle *T*.

Equations for selecting the resistor:

Equation 1

When the drive supply voltage is 200 … 240 V: $R = \frac{150\ 000}{P_{Rmax}}$

When the drive supply voltage is 380 … 415 V: $R = \frac{450\ 000}{P_{Rmax}}$

When the drive supply voltage is 415 … 480 V: $R = \frac{615\ 000}{P_{Rmax}}$

Equation 2

$$E_{Rpulse} = P_{Rmax} \cdot t_{on}$$

Equation 3

$$P_{Rave} = P_{Rmax} \cdot \frac{t_{on}}{T}$$

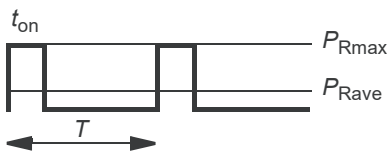

For conversion, use 1 hp = 746 W.

R	Calculated brake resistor value (ohm). Make sure that: $R_{min} < R < R_{max}$
P_{Rmax}	Maximum power during the braking cycle (W)
P_{Rave}	Average power during the braking cycle (W)
E_{Rpulse}	Energy conducted into the resistor during a single braking pulse (J)
t_{on}	Braking time (one cycle) (s)
T	Braking cycle time (s)

WARNING!
Do not use a brake resistor with a resistance below the minimum value specified for the particular drive. The drive and the internal chopper are not able to handle the overcurrent caused by the low resistance.

Reference brake resistors

Type ACS380-04xx-…	R_{min}	R_{max}	P_{BRcont}		P_{BRmax}		Example resistor types [1)]
	ohm	ohm	kW	hp	kW	hp	Danotherm
1-phase U_N = 230 V							
02A4-1	32.5	468	0.25	0.33	0.38	0.50	CBH 360 C T 406 210R or CAR 200 D T 406 210R
03A7-1	32.5	316	0.37	0.50	0.56	0.74	
04A8-1	32.5	213	0.55	0.75	0.83	1.10	
06A9-1	32.5	145	0.75	1.00	1.10	1.50	CBR-V 330 D T 406 78R UL
07A8-1	32.5	96.5	1.10	1.50	1.70	2.20	
09A8-1	32.5	69.9	1.50	2.00	2.30	3.00	CBR-V 560 D HT 406 39R UL
12A2-1	19.5	47.1	2.20	3.00	3.30	4.40	
3-phase U_N = 230 V							
02A4-2	39	474	0.25	0.33	0.38	0.50	CBH 360 C T 406 210R or CAR 200 D T 406 210R
03A7-2	39	319	0.37	0.50	0.56	0.74	
04A8-2	39	217	0.55	0.75	0.83	1.10	
06A9-2	39	145	0.75	1.00	1.13	1.50	CBR-V 330 D T 406 78R UL
07A8-2	39	105	1.10	1.50	1.65	2.20	
09A8-2	20	71	1.50	2.00	2.25	3.00	CBR-V 560 D HT 406 39R UL
12A2-2	20	52	2.20	2.00	3.30	4.40	
17A5-2	16	38	3.00	3.00	4.50	6.00	CBT-H 560 D HT 406 19R
25A0-2	16	28	4.00	5.00	6.00	8.00	
032A-2	3	20	5.50	7.50	8.25	11.00	CBT-V 760 G H T 282 8R
048A-2	3	14	7.50	10.00	11.25	15.00	
055A-2	3	10	11.00	15.00	16.50	21.99	
3-phase U_N = 400/480 V							
01A8-4	99	933	0.37	0.50	0.56	0.74	CBH 360 C T 406 210R or CAR 200 D T 406 210R
02A6-4	99	628	0.55	0.75	0.83	1.10	
03A3-4	99	428	0.75	1.00	1.13	1.50	
04A0-4	99	285	1.10	1.50	1.65	2.20	
05A6-4	99	206	1.50	2.00	2.25	3.00	

Type ACS380-04xx-…	R_{min}	R_{max}	P_{BRcont}		P_{BRmax}		Example resistor types [1]
	ohm	ohm	kW	hp	kW	hp	Danotherm
07A2-4	53	139	2.20	2.00	3.30	4.40	CBR-V 330 D T 406 78R UL
09A4-4	53	102	3.00	3.00	4.50	6.00	
12A6-4	32	76	4.00	5.00	6.00	8.00	
17A0-4	32	54	5.50	7.50	8.25	11.00	CBR-V 560 D HT 406 39R UL
25A0-4	23	39	7.50	10.00	11.25	15.00	
032A-4	6	29	11.00	15.00	17	22.00	CBT-H 560 D HT 406 19R
038A-4	6	24	15.00	20.00	23	30.00	CBT-H 760 D HT 406 16R
045A-4	6	20	18.50	25.00	28	37.00	
050A-4	6	20	22.00	30.00	33	44.00	

[1] Braking cycle differs from that of the drive. Refer to brake resistor manufacturer's documentation.

Definitions

P_{BRmax}	The maximum braking capacity of the drive, when the length of the braking pulse is at most 1 minute for each 10 minutes (P_{BRcont} × 1.5). Must be more than the desired braking power.
P_{BRcont}	The continuous braking capacity of the drive
R_{max}	The maximum resistance value of the brake resistor that can provide P_{BRcont}
R_{min}	The minimum permitted resistance value of the brake resistor

Selecting and routing the brake resistor cables

Use a shielded cable specified in the technical data.

Minimizing electromagnetic interference

Obey these rules in order to minimize electromagnetic interference caused by the rapid current changes in the resistor cables:

- Shield the braking power line completely, either by using shielded cable or a metallic enclosure. Unshielded single-core cable can only be used if it is routed inside a cabinet that efficiently suppresses the radiated emissions.
- Install the cables away from other cable routes.
- Avoid long parallel runs with other cables. The minimum parallel cabling separation distance is 0.3 meters (1 ft).
- Cross the other cables at 90 degree angles.

- Keep the cable as short as possible in order to minimize the radiated emissions and stress on chopper IGBTs. The longer the cable the greater the radiated emissions, inductive load and voltage peaks over the IGBT semiconductors of the brake chopper.

Note: ABB has not verified that the EMC requirements are fulfilled with custom brake resistors and cabling. The customer must consider the EMC compliance of the complete installation.

Maximum cable length

The maximum length of the resistor cable(s) is 10 m (33 ft).

Placing the brake resistors

Install the resistor assembly outside the drive in a place where it is able to cool effectively.

Arrange the cooling of the resistor in a way that:

- no danger of overheating is caused to the resistor or nearby materials, and
- the temperature of the room the resistor is located in does not exceed the allowed maximum.

Supply the resistor with cooling air or coolant according to the resistor manufacturer's instructions.

WARNING!
The materials near the brake resistor must be non-flammable. The surface temperature of the resistor is high. Air flowing from the resistor is of hundreds of degrees Celsius. If the exhaust vents are connected to a ventilation system, make sure that the material withstands high temperatures. Protect the resistor against contact.

Protecting the system in brake circuit fault situations

Protecting the system in cable and brake resistor short-circuit situations

The drive input fuses will also protect the resistor cable when it is identical with the input power cable.

Protecting the system against thermal overload

The drive has a brake thermal model which protects the brake resistor against overload. ABB recommends to enable the thermal model at start up.

ABB recommends to equip the drive with a main contactor for safety reasons even when you have enabled the resistor thermal model. Wire the contactor so that it opens in case the resistor overheats. This is essential for safety since the drive will not otherwise be able to interrupt the main supply if the chopper remains conductive in a fault situation.

An example wiring diagram is shown below. ABB recommends that you use resistors equipped with a thermal switch (1) inside the resistor assembly. The switch indicates overtemperature.

ABB recommends that you also wire the thermal switch to a digital input of the drive, and configure the input to cause a fault trip at resistor overtemperature indication.

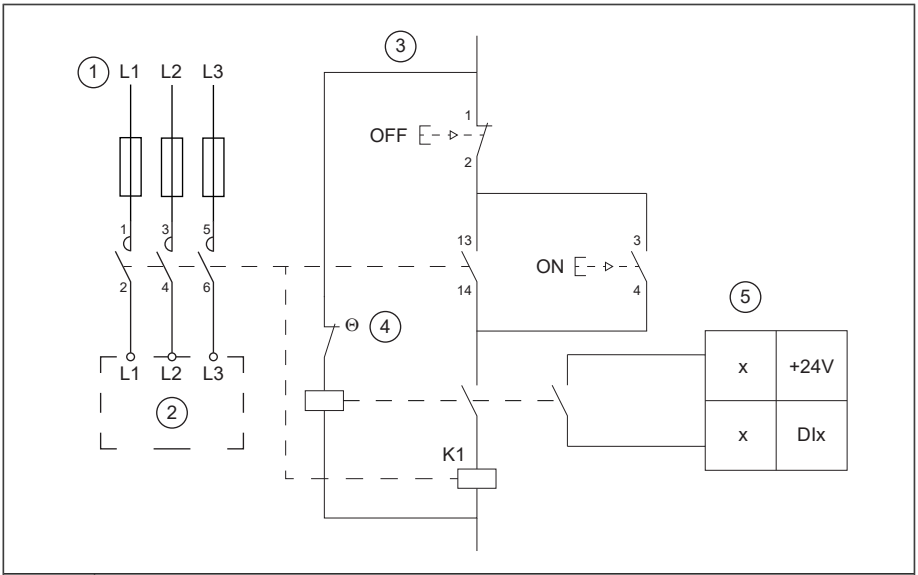

1	Drive input power connection with a main contactor
2	Drive
3	Main contactor control circuit
4	Brake resistor thermal switch
5	Digital input. Monitors the brake resistor thermal switch.

Mechanical and electrical installation of brake resistor

WARNING!
Obey the safety instructions of the drive. If you ignore them, injury or death, or damage to the equipment can occur. If you are not a qualified electrical professional, do not do installation or maintenance work.

WARNING!
Stop the drive and do the steps in section *Electrical safety precautions (page 17)* before you start the work.

Mechanical installation

Refer to the resistor manufacturer's instructions.

Electrical installation

Measuring the insulation

See the electrical installation instructions of the drive.

Connecting power cables

See the electrical installation instructions of the drive.

Connection the control cables

Connect the thermal switch of the brake resistor as described in *Protecting the system against thermal overload (page 179)*.

Start-up

Set the following parameters:

1. Disable the overvoltage control of the drive with parameter *30.30 Overvoltage control*.
2. Set the source of parameter *31.01 External event 1 source* to point to the digital input where the thermal switch of the brake resistor is wired.
3. Set parameter *31.02 External event 1 type* to *Fault*.
4. Enable the brake chopper by parameter *43.06 Brake chopper enable*. If *Enabled with thermal model* is selected, set also the brake resistor overload protection parameters *43.08* and *43.09* according to the application.
5. Check the resistance value of parameter *43.10 Brake resistance*.

With these parameter settings, the drive generates a fault and coasts to a stop on brake resistor overtemperature.

13

The Safe torque off function

Contents of this chapter

This chapter describes the Safe torque off (STO) function of the drive and gives instructions for its use.

Description

The Safe torque off function can be used, for example, as the final actuator device of safety circuits that stop the drive in case of danger (such as an emergency stop circuit). Another typical application is a prevention of unexpected start-up function that enables short-time maintenance operations like cleaning or work on non-electrical parts of the machinery without switching off the power supply to the drive.

When activated, the Safe torque off function disables the control voltage for the power semiconductors of the drive output stage (A, see the diagrams below), thus preventing the drive from generating the torque required to rotate the motor. If the motor is running when Safe torque off is activated, it coasts to a stop.

The Safe torque off function has a redundant architecture, that is, both channels must be used in the safety function implementation. The safety data given in this manual is calculated for redundant use, and does not apply if both channels are not used.

The Safe torque off function complies with these standards:

Standard	Name
IEC 60204-1:2016 EN 60204-1:2018	*Safety of machinery – Electrical equipment of machines – Part 1: General requirements*

Standard	Name
IEC 61000-6-7:2014	*Electromagnetic compatibility (EMC) – Part 6-7: Generic standards – Immunity requirements for equipment intended to perform functions in a safety-related system (functional safety) in industrial locations*
IEC 61326-3-1:2017	*Electrical equipment for measurement, control and laboratory use – EMC requirements – Part 3-1: Immunity requirements for safety-related systems and for equipment intended to perform safety-related functions (functional safety) – General industrial applications*
IEC 61508-1:2010	*Functional safety of electrical/electronic/programmable electronic safety-related systems – Part 1: General requirements*
IEC 61508-2:2010	*Functional safety of electrical/electronic/programmable electronic safety-related systems – Part 2: Requirements for electrical/electronic/programmable electronic safety-related systems*
IEC 61511-1:2017	*Functional safety – Safety instrumented systems for the process industry sector*
IEC 61800-5-2:2016 EN 61800-5-2:2007	*Adjustable speed electrical power drive systems – Part 5-2: Safety requirements – Functional*
IEC 62061:2005 + A1:2012 + A2:2015 EN 62061:2005 + AC:2010 + A1:2013 + A2:2015	*Safety of machinery – Functional safety of safety-related electrical, electronic and programmable electronic control systems*
EN ISO 13849-1:2015	*Safety of machinery – Safety-related parts of control systems – Part 1: General principles for design*
EN ISO 13849-2:2012	*Safety of machinery – Safety-related parts of control systems – Part 2: Validation*

The function also corresponds to Prevention of unexpected start-up as specified by EN ISO 14118:2018 (ISO 14118:2017), and Uncontrolled stop (stop category 0) as specified in EN/IEC 60204-1.

Compliance with the European Machinery Directive

See the technical data.

The Declaration of conformity is shown at the end of this chapter.

Wiring

For the electrical specifications of the STO connection, see the technical data of the control unit.

Connection principle

Single ACS380 drive, internal power supply

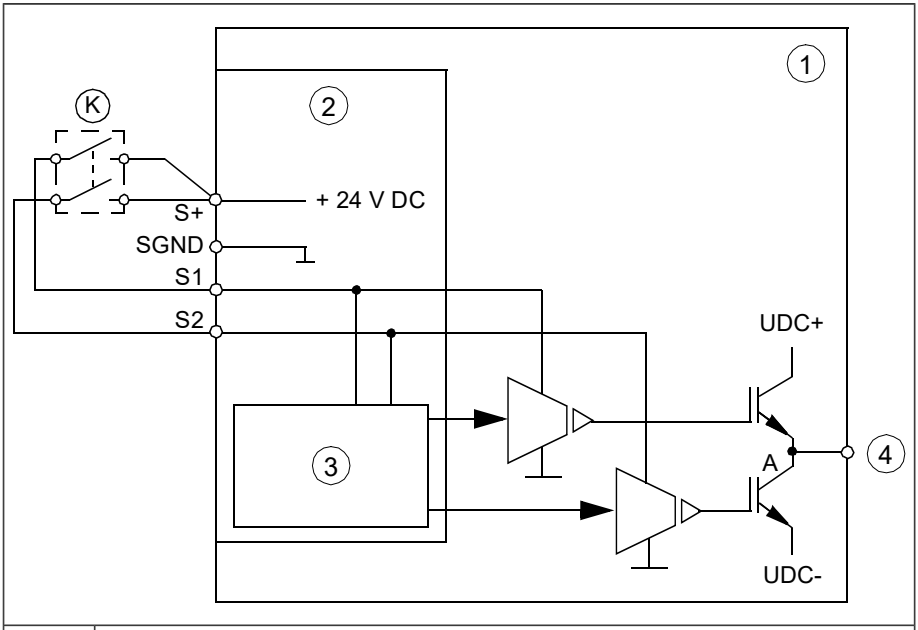

1	Drive
2	Control unit
3	Control logic
4	To motor
K	Activation switch

Single ACS380 drive, external power supply

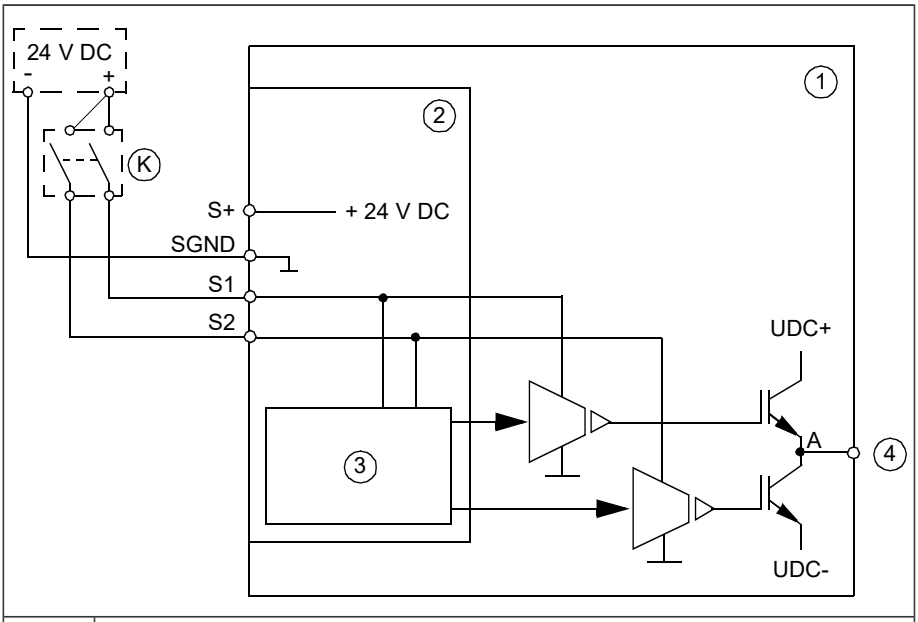

1	Drive
2	Control unit
3	Control logic
4	To motor
K	Activation switch

Single-channel connection of activation switch

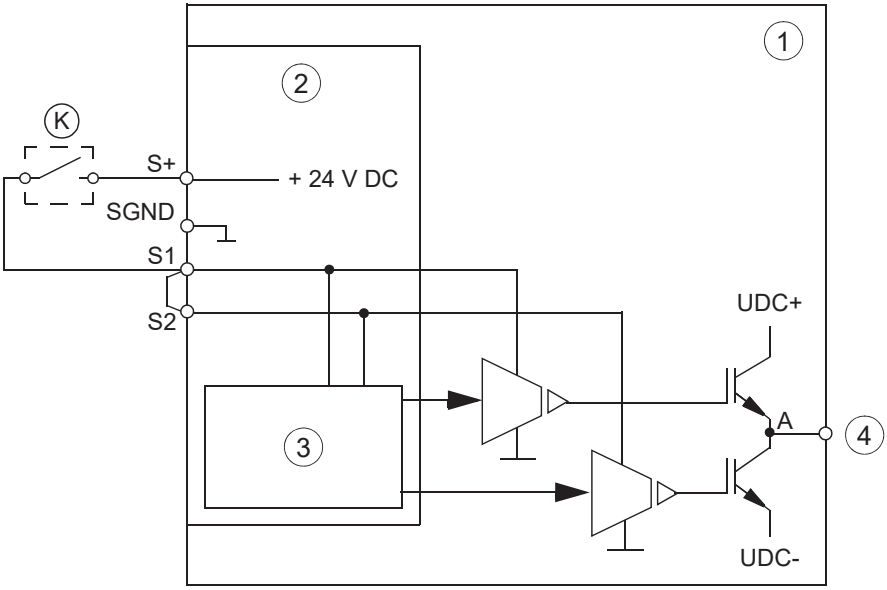

1	Drive
2	Control unit
3	Control logic
4	To motor
K	Activation switch

Note:

- Both STO inputs (S1, S2) must be connected to the activation switch. Otherwise, no SIL/PL classification is given.
- Pay special attention to avoiding any potential failure modes for the wiring. For example, use a shielded cable. For measures for fault exclusion of wiring, refer to EN ISO 13849-2:2012, table D.4.

Wiring examples

Single ACS380 drive, internal power supply

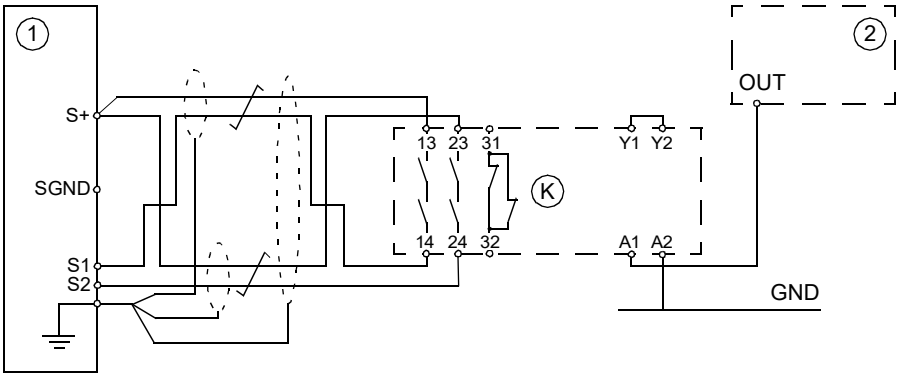

1	Drive
2	Safety PLC
K	Safety relay

Single ACS380 drive, external power supply

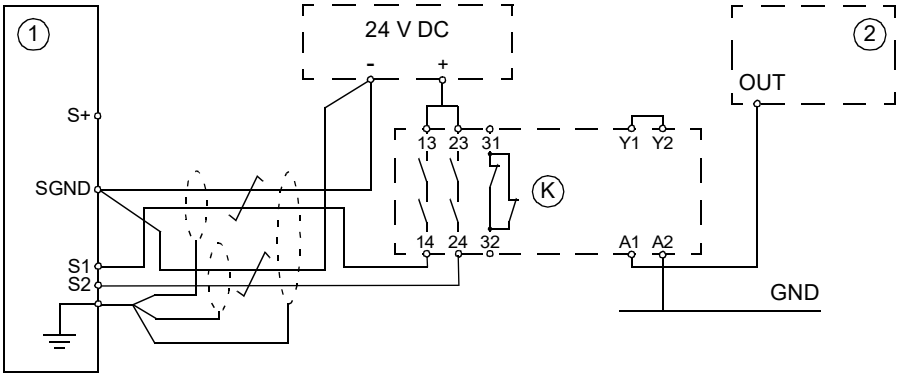

1	Drive
2	Safety PLC
K	Safety relay

Multiple ACS380 drives, internal power supply

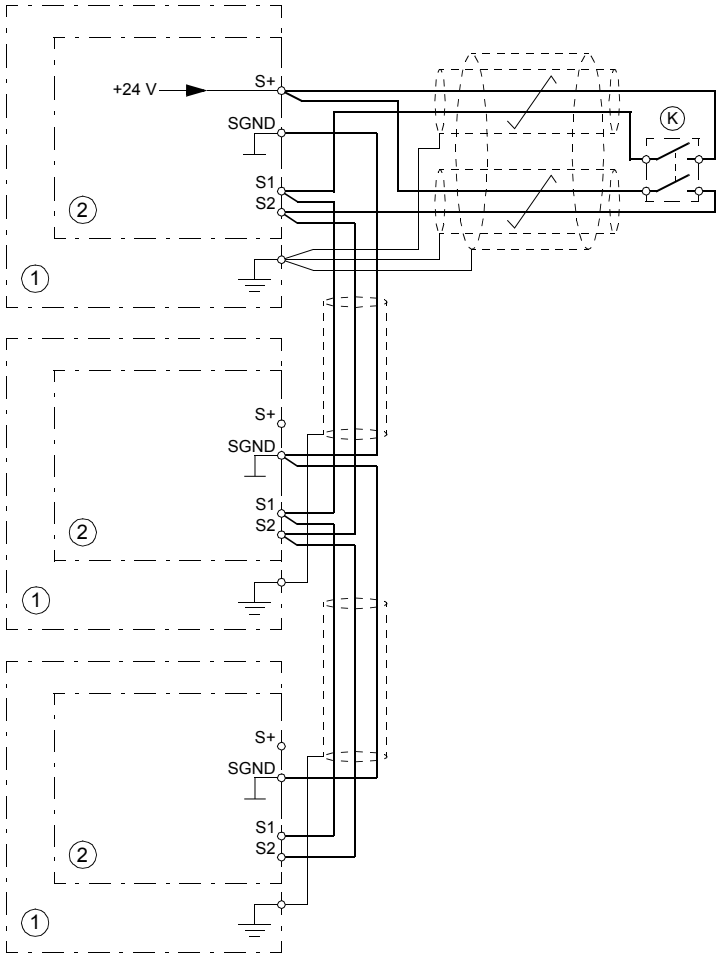

1	Drive
2	Control unit
K	Activation switch

Multiple ACS380 drives, external power supply

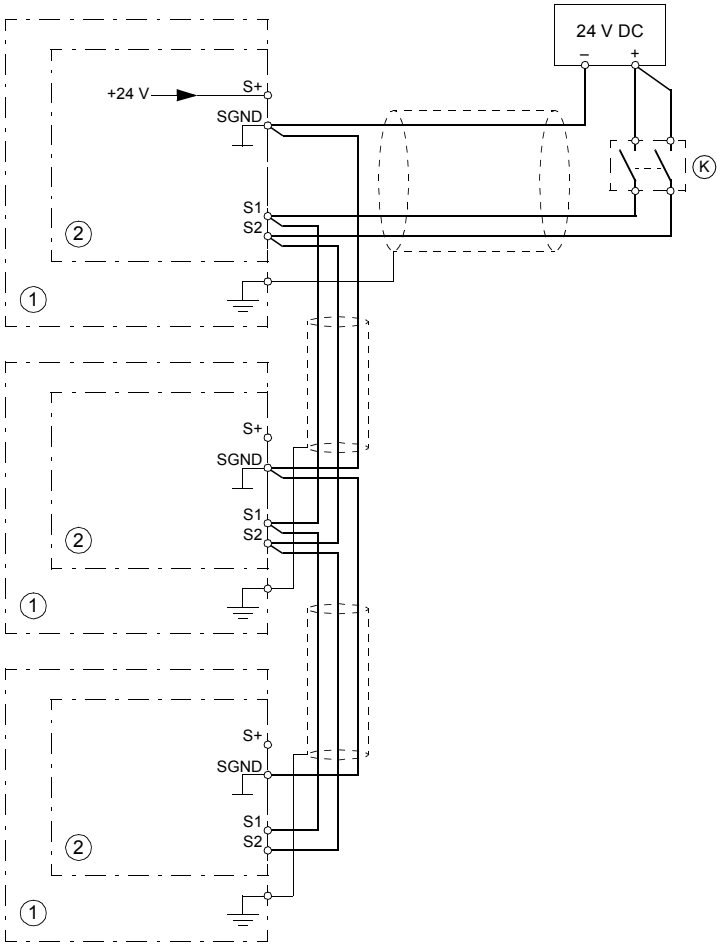

1	Drive
2	Control unit
K	Activation switch

Activation switch

In the wiring diagrams, the activation switch has the designation [K]. This represents a component such as a manually operated switch, an emergency stop push button switch, or the contacts of a safety relay or safety PLC.

- In case a manually operated activation switch is used, the switch must be of a type that can be locked out to the open position.
- The contacts of the switch or relay must open/close within 200 ms of each other.

Cable types and lengths

- Double-shielded twisted-pair cable is recommended.
- Maximum cable lengths:
  - 300 m (1000 ft) between activation switch [K] and drive control unit
  - 60 m (200 ft) between multiple drives
  - 60 m (200 ft) between external power supply and first control unit

Note: A short-circuit in the wiring between the switch and an STO terminal causes a dangerous fault. Therefore, it is recommended to use a safety relay (including wiring diagnostics) or a wiring method (shield grounding, channel separation) which reduces or eliminates the risk caused by the short-circuit.

Note: The voltage at the STO input terminals of the drive must be at least 13 V DC to be interpreted as “1”.

The pulse tolerance of the input channels is 1 ms.

Grounding of protective shields

- Ground the shield in the cabling between the activation switch and the control unit at the control unit only.
- Ground the shield in the cabling between two control units at one control unit only.

Operation principle

1. The Safe torque off activates (the activation switch is opened, or safety relay contacts open).
2. The STO inputs of the drive control unit de-energize.
3. The control unit cuts off the control voltage from the output IGBTs.
4. The control program generates an indication as defined by parameter *31.22* (see the firmware manual of the drive).

   The parameter selects which indications are given when one or both STO signals are switched off or lost. The indications also depend on whether the drive is running or stopped when this occurs.

   Note: This parameter does not affect the operation of the STO function itself. The STO function will operate regardless of the setting of this parameter: a running drive will stop upon removal of one or both STO signals, and will not start until both STO signals are restored and all faults reset.

   Note: The loss of only one STO signal always generates a fault as it is interpreted as a malfunction of STO hardware or wiring.
5. The motor coasts to a stop (if running). The drive cannot restart while the activation switch or safety relay contacts are open. After the contacts close, a reset may be needed (depending on the setting of parameter *31.22*). A new start command is required to start the drive.

Start-up including validation test

To ensure the safe operation of a safety function, validation is required. The final assembler of the machine must validate the function by performing a validation test. The test must be performed

- at initial start-up of the safety function
- after any changes related to the safety function (circuit boards, wiring, components, settings, etc.)
- after any maintenance work related to the safety function
- at the proof test of the safety function
- after a drive firmware update.

Competence

The validation test of the safety function must be carried out by a competent person with adequate expertise and knowledge of the safety function as well as functional safety, as required by IEC 61508-1 clause 6. The test procedures and report must be documented and signed by this person.

Validation test reports

Signed validation test reports must be stored in the logbook of the machine. The report shall include documentation of start-up activities and test results, references to failure reports and resolution of failures. Any new validation tests performed due to changes or maintenance shall be logged into the logbook.

Validation test procedure

After wiring the Safe torque off function, validate its operation as follows.

Action	☑
WARNING! Obey the safety instructions. If you ignore them, injury or death, or damage to the equipment can occur.	☐
Make sure that the drive can be run and stopped freely during start-up.	☐
Stop the drive (if running), switch the input power off and isolate the drive from the power line using a disconnector.	☐
Check the STO circuit connections against the wiring diagram.	☐
Close the disconnector and switch the power on.	☐

Action	☑
Test the operation of the STO function when the motor is stopped. • Give a stop command for the drive (if running) and wait until the motor shaft is at a standstill. Make sure that the drive operates as follows: • Open the STO circuit. The drive generates an indication if one is defined for the 'stopped' state in parameter *31.22* (see the firmware manual). • Give a start command to verify that the STO function blocks the drive's operation. The drive generates a warning. The motor should not start. • Close the STO circuit. • Reset any active faults. Restart the drive and check that the motor runs normally.	☐
Test the operation of the STO function when the motor is running. • Start the drive and make sure the motor is running. • Open the STO circuit. The motor should stop. The drive generates an indication if one is defined for the 'running' state in parameter *31.22* (see the firmware manual). • Reset any active faults and try to start the drive. • Make sure that the motor stays at a standstill and the drive operates as described above in testing the operation when the motor is stopped. • Close the STO circuit. • Reset any active faults. Restart the drive and check that the motor runs normally.	☐
Test the operation of the failure detection of the drive. The motor can be stopped or running. • Open the 1st channel of the STO circuit. If the motor was running, it should coast to a stop. The drive generates a *FA81 Safe Torque Off 1 loss* fault indication (see the firmware manual). • Give a start command to verify that the STO function blocks the drive's operation. The motor should not start. • Close the STO circuit. • Reset any active faults. Restart the drive and check that the motor runs normally. • Open the 2nd channel of the STO circuit. If the motor was running, it should coast to a stop. The drive generates a *FA82 Safe Torque Off 2 loss* fault indication (see the firmware manual). • Give a start command to verify that the STO function blocks the drive's operation. The motor should not start. • Close the STO circuit. • Reset any active faults. Restart the drive and check that the motor runs normally.	☐
Document and sign the validation test report which verifies that the safety function is safe and accepted for operation.	☐

Use

1. Open the activation switch, or activate the safety functionality that is wired to the STO connection.
2. The STO inputs on the drive control unit de-energize, and the control unit cuts off the control voltage from the output IGBTs.
3. The control program generates an indication as defined by parameter *31.22* (see the firmware manual of the drive).
4. The motor coasts to a stop (if running). The drive will not restart while the activation switch or safety relay contacts are open.
5. Deactivate the STO by closing the activation switch, or resetting the safety functionality that is wired to the STO connection.
6. Reset any faults before restarting.

WARNING!
The Safe torque off function does not disconnect the voltage of the main and auxiliary circuits from the drive. Therefore maintenance work on electrical parts of the drive or the motor can only be carried out after isolating the drive from the supply and all other voltage sources.

WARNING!
The drive cannot detect or memorize any changes in the STO circuitry when the drive control unit is not powered. If both STO circuits are closed and a level-type start signal is active when the power is restored, it is possible that the drive starts without a fresh start command. Take this into account in the risk assessment of the system.

This is also valid when the drive is only powered by a BAPO-xx auxiliary power extension module.

WARNING!
(With permanent magnet or synchronous reluctance [SynRM] motors only)

In case of a multiple IGBT power semiconductor failure, the drive can produce an alignment torque which maximally rotates the motor shaft by 180/*p* degrees (with permanent magnet motors) or 180/2*p* degrees (with synchronous reluctance [SynRM] motors) regardless of the activation of the Safe torque off function. *p* denotes the number of pole pairs.

Notes:

- If a running drive is stopped by using the Safe torque off function, the drive will cut off the motor supply voltage and the motor will coast to a stop. If this causes danger

or is not otherwise acceptable, stop the drive and machinery using the appropriate stop mode before activating the Safe torque off function.

- The Safe torque off function overrides all other functions of the drive.
- The Safe torque off function is ineffective against deliberate sabotage or misuse.
- The Safe torque off function has been designed to reduce the recognized hazardous conditions. In spite of this, it is not always possible to eliminate all potential hazards. The assembler of the machine must inform the final user about the residual risks.

Maintenance

After the operation of the circuit is validated at start-up, the STO function shall be maintained by periodic proof testing. In high demand mode of operation, the maximum proof test interval is 20 years. In low demand mode of operation, the maximum proof test interval is 5 or 2 years; see section *Safety data (page 199)*. It is assumed that all dangerous failures of the STO circuit are detected by the proof test. To perform the proof test, do the *Validation test procedure (page 193)*.

Note: See also the Recommendation of Use CNB/M/11.050 (published by the European co-ordination of Notified Bodies) concerning dual-channel safety-related systems with electromechanical outputs:

- When the safety integrity requirement for the safety function is SIL 3 or PL e (cat. 3 or 4), the proof test for the function must be performed at least every month.
- When the safety integrity requirement for the safety function is SIL 2 (HFT = 1) or PL d (cat. 3), the proof test for the function must be performed at least every 12 months.

The STO function of the drive does not contain any electromechanical components.

In addition to proof testing, it is a good practice to check the operation of the function when other maintenance procedures are carried out on the machinery.

Include the Safe torque off operation test described above in the routine maintenance program of the machinery that the drive runs.

If any wiring or component change is needed after start up, or the parameters are restored, do the test given in section *Validation test procedure (page 193)*.

Use only spare parts approved by ABB.

Record all maintenance and proof test activities in the machine logbook.

Competence

The maintenance and proof test activities of the safety function must be carried out by a competent person with adequate expertise and knowledge of the safety function as well as functional safety, as required by IEC 61508-1 clause 6.

Fault tracing

The indications given during the normal operation of the Safe torque off function are selected by drive control program parameter *31.22*.

The diagnostics of the Safe torque off function cross-compare the status of the two STO channels. In case the channels are not in the same state, a fault reaction function is performed and the drive trips on an “STO hardware failure” fault. An attempt to use the STO in a non-redundant manner, for example activating only one channel, will trigger the same reaction.

See the firmware manual of the drive control program for the indications generated by the drive, and for details on directing fault and warning indications to an output on the control unit for external diagnostics.

Any failures of the Safe torque off function must be reported to ABB.

Safety data

The safety data for the Safe torque off function is given below.

Note: The safety data is calculated for redundant use, and does not apply if both STO channels are not used.

Frame size	SIL/ SILCL	PL	SFF (%)	PFH (T_1 = 20 a) (1/h)	PFD_{avg} (T_1 = 2 a)	PFD_{avg} (T_1 = 5 a)	$MTTF_D$ (a)	DC (%)	Cat.	SC	HFT	CCF	T_M (a)
1-phase U_N = 230 V													
R0	3	e	>99	8.52E-09	7.43E-05	1.86E-04	1968	≥90	3	3	1	80	20
R1	3	e	>99	8.52E-09	7.43E-05	1.86E-04	1968	≥90	3	3	1	80	20
R2	3	e	>99	8.52E-09	7.43E-05	1.86E-04	1968	≥90	3	3	1	80	20
3-phase U_N = 230 V													
R1	3	e	>99	7.65E-09	6.71E-05	1.68E-04	2210	≥90	3	3	1	80	20
R2	3	e	>99	7.65E-09	6.71E-05	1.68E-04	2209	≥90	3	3	1	80	20
R3	3	e	>99	7.61E-09	6.68E-05	1.67E-04	2569	≥90	3	3	1	80	20
R4	3	e	>99	7.61E-09	6.68E-05	1.67E-04	2568	≥90	3	3	1	80	20
3-phase U_N = 400/480 V													
R0	3	e	>99	7.65E-09	6.71E-05	1.68E-04	2210	≥90	3	3	1	80	20
R1	3	e	>99	7.65E-09	6.71E-05	1.68E-04	2210	≥90	3	3	1	80	20
R2	3	e	>99	7.65E-09	6.71E-05	1.68E-04	2209	≥90	3	3	1	80	20
R3	3	e	>90	7.61E-09	6.68E-05	1.67E-04	2569	≥90	3	3	1	80	20
R4	3	e	>99	7.61E-09	6.68E-05	1.67E-04	2568	≥90	3	3	1	80	20
3AXD10000320081 F													

- The following temperature profile is used in safety value calculations:
  - 670 on/off cycles per year with ΔT = 71.66 °C
  - 1340 on/off cycles per year with ΔT = 61.66 °C
  - 30 on/off cycles per year with ΔT = 10.0 °C
  - 32 °C board temperature at 2.0% of time

  - 60 °C board temperature at 1.5% of time
  - 85 °C board temperature at 2.3% of time.
- The STO is a type A safety component as defined in IEC 61508-2.
- Relevant failure modes:
  - The STO trips spuriously (safe failure)
  - The STO does not activate when requested
  - A fault exclusion on the failure mode “short circuit on printed circuit board” has been made (EN 13849-2, table D.5). The analysis is based on an assumption that one failure occurs at one time. No accumulated failures have been analyzed.
- STO response times:
  - STO reaction time (shortest detectable break): 1 ms
  - STO response time: 5 ms (typical), 15 ms (maximum)
  - Fault detection time: Channels in different states for longer than 200 ms
  - Fault reaction time: Fault detection time + 10 ms
- Indication delays:
  - STO fault indication (parameter *31.22*) delay: < 500 ms
  - STO warning indication (parameter *31.22*) delay: < 1000 ms

Terms and abbreviations

Term or abbreviation	Reference	Description
Cat.	EN ISO 13849-1	Classification of the safety-related parts of a control system in respect of their resistance to faults and their subsequent behavior in the fault condition, and which is achieved by the structural arrangement of the parts, fault detection and/or by their reliability. The categories are: B, 1, 2, 3 and 4.
CCF	EN ISO 13849-1	Common cause failure (%)
DC	EN ISO 13849-1	Diagnostic coverage
HFT	IEC 61508	Hardware fault tolerance
$MTTF_D$	EN ISO 13849-1	Mean time to dangerous failure: (Total number of life units) / (Number of dangerous, undetected failures) during a particular measurement interval under stated conditions
PFD_{avg}	IEC 61508	Average probability of dangerous failure on demand, that is, mean unavailability of a safety-related system to perform the specified safety function when a demand occurs

Term or abbreviation	Reference	Description
PFH	IEC 61508	Average frequency of dangerous failures per hour, that is, average frequency of a dangerous failure of a safety related system to perform the specified safety function over a given period of time
PL	EN ISO 13849-1	Performance level. Levels a…e correspond to SIL
Proof test	IEC 61508, IEC 62061	Periodic test performed to detect failures in a safety-related system so that, if necessary, a repair can restore the system to an "as new" condition or as close as practical to this condition
SC	IEC 61508	Systematic capability
SFF	IEC 61508	Safe failure fraction (%)
SIL	IEC 61508	Safety integrity level (1…3)
SILCL	IEC/EN 62061	Maximum SIL (level 1…3) that can be claimed for a safety function or subsystem
STO	IEC/EN 61800-5-2	Safe torque off
T_1	IEC 61508-6	Proof test interval. T_1 is a parameter used to define the probabilistic failure rate (PFH or PFD) for the safety function or subsystem. Performing a proof test at a maximum interval of T_1 is required to keep the SIL capability valid. The same interval must be followed to keep the PL capability (EN ISO 13849) valid. See also section Maintenance.
T_M	EN ISO 13849-1	Mission time: the period of time covering the intended use of the safety function/device. After the mission time elapses, the safety device must be replaced. Note that any T_M values given cannot be regarded as a guarantee or warranty.

TÜV certificate

The TÜV certificate is available on the Internet at www.abb.com/drives/documents.

Declarations of conformity

EU Declaration of Conformity

Machinery Directive 2006/42/EC

We

Manufacturer:	ABB Oy
Address:	Hiomotie 13, 00380 Helsinki, Finland.
Phone:	+358 10 22 11

declare under our sole responsibility that the following product:

Frequency converter(s)
ACS380-04

with regard to the safety function(s)

- **Safe Torque Off**
- **Safe stop 1 (SS1-t, with FSPS-21 PROFIsafe module, +Q986)**

is/are in conformity with all the relevant safety component requirements of EU Machinery Directive 2006/42/EC, when the listed safety function is used for safety component functionality.

The following harmonized standards have been applied:

EN 61800-5-2:2007	Adjustable speed electrical power drive systems – Part 5-2: Safety requirements - Functional
EN 62061:2005 + AC:2010 + A1:2013 + A2:2015	Safety of machinery – Functional safety of safety-related electrical, electronic and programmable electronic control systems
EN ISO 13849-1:2015	Safety of machinery – Safety-related parts of control systems. Part 1: General requirements
EN ISO 13849-2:2012	Safety of machinery – Safety-related parts of the control systems. Part 2: Validation
EN 60204-1:2018	Safety of machinery – Electrical equipment of machines – Part 1: General requirements

The following other standards have been applied:

IEC 61508:2010, parts 1-2	Functional safety of electrical / electronic / programmable electronic safety-related systems
IEC 61800-5-2:2016	Adjustable speed electrical power drive systems – Part 5-2: Safety requirements - Functional

The product(s) referred in this Declaration of conformity fulfil(s) the relevant provisions of other European Union Directives which are notified in Single EU Declaration of conformity 3AXD10000495941.

Person authorized to compile the technical file:
Name and address: Jussi Vesti, Hiomotie 13, 00380 Helsinki, Finland.

Helsinki, 10.11.2020
Signed for and on behalf of:

Tuomo Tarula
Vice president, ABB Oy

Vesa Tuomainen
Product Engineering manager, ABB Oy

Document number 3AXD10000462189

Page 1 of 1

Declaration of Conformity

Supply of Machinery (Safety) Regulations 2008

We

Manufacturer:	ABB Oy
Address:	Hiomotie 13, 00380 Helsinki, Finland.
Phone:	+358 10 22 11

declare under our sole responsibility that the following product:

Frequency converter

ACS380-04

with regard to the safety functions

- Safe Torque Off
- Safe stop 1 (SS1-t, with FSPS-21 PROFIsafe module, +Q986)

is in conformity with all the relevant safety component requirements of the Supply of Machinery (Safety) Regulations 2008, when the listed safety function is used for safety component functionality.

The following harmonized standards have been applied:

EN 61800-5-2:2007	Adjustable speed electrical power drive systems – Part 5-2: Safety requirements - Functional
EN 62061:2005 + AC:2010 + A1:2013 + A2:2015	Safety of machinery – Functional safety of safety-related electrical, electronic and programmable electronic control systems
EN ISO 13849-1:2015	Safety of machinery – Safety-related parts of control systems. Part 1: General requirements
EN ISO 13849-2:2012	Safety of machinery – Safety-related parts of the control systems. Part 2: Validation
EN 60204-1:2018	Safety of machinery – Electrical equipment of machines – Part 1: General requirements

The following other standards have been applied:

IEC 61508:2010, parts 1-2	Functional safety of electrical / electronic / programmable electronic safety-related systems
IEC 61800-5-2:2016	Adjustable speed electrical power drive systems – Part 5-2: Safety requirements - Functional

The product(s) referred in this declaration of conformity fulfil(s) the relevant provisions of other UK statutory requirements, which are notified in a single declaration of conformity 3AXD10001323213.

Authorized to compile the technical file: ABB Limited, Daresbury Park, Cheshire, United Kingdom, WA4 4BT.

Helsinki, May 7, 2021
Signed for and on behalf of:

Tuomo Tarula
Local Division Manager, ABB Oy

Mikko Korpinen
Product Unit Manager, ABB Oy

Document number 3AXD10001329530

14

BTAC-02 pulse encoder interface module

Contents of this chapter

This chapter contains a description and technical data of the optional BTAC-02 pulse encoder interface module and describes how to start up the module.

Safety instructions

WARNING!
Obey the safety instructions of the drive. If you ignore them, injury or death, or damage to the equipment can occur.

Hardware description

Product overview

The BTAC pulse encoder interface module (option +L535) adds a digital pulse encoder interface to the drive. Use a pulse encoder, if you need accurate speed or position (angle) feedback from the motor shaft. The BTAC module supplies power to the encoder.

The BTAC module has the features of the BAPO-01 auxiliary power extension module. It provides back-up power to the drive.

Layout

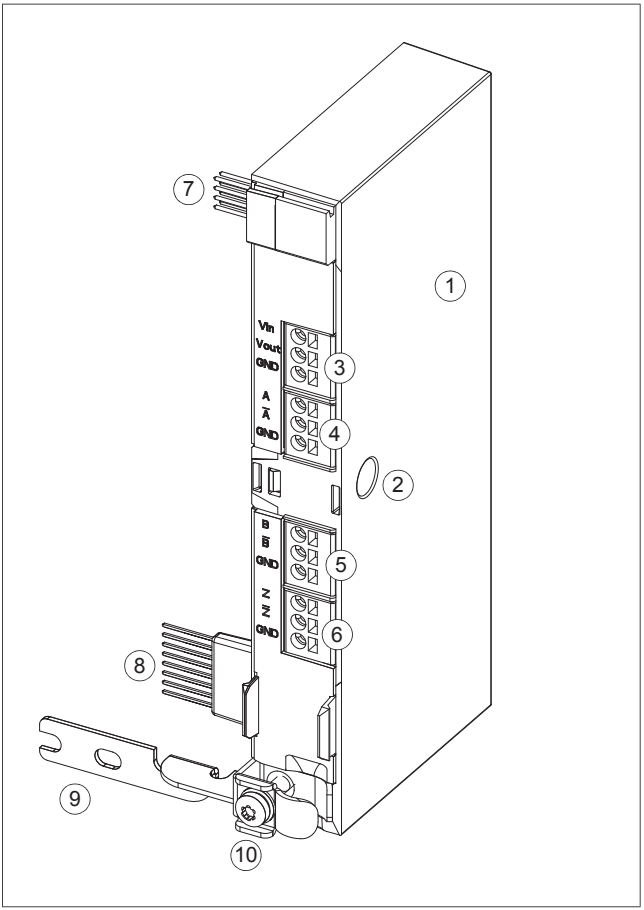

1. BTAC module
2. Locking screw hole
3. X103 connector
4. X104 connector
5. X105 connector
6. X106 connector
7. Internal X100 connector
8. Internal X102 connector
9. Grounding rail
10. Grounding screw

Mechanical installation

See the electrical installation instructions of the drive.

Electrical installation

Wiring – General

Connect the pulse encoder to the BTAC module with cables as specified in this table.

Cable	Maximum connector size		Maximum cable length	
4 × (2+1) double-shielded twisted pair cable with individual and overall shields	2.5 mm^2	12 AWG	100 m [1]	328 ft

[1] If the encoder supply voltage is less than 10 V, the maximum cable length is 50 m (164 ft).

Terminal designations

The encoder user interface of the BTAC module consists of four 1×3-pin terminal blocks.

Use this table for reference when you wire the BTAC module and encoder terminals.

Identification				Description
BTAC	**Encoder**			
X103				
VIN	V_{CC}/PWR			External power supply input
VOUT	V_{CC}/PWR			Power supply output for the encoder
GND	0 V / GND			External power and encoder ground
X104				
A	1	A	A+	Encoder signal A + terminal
A-	1-	A-	A-	Encoder signal A - terminal
GND	-	-	-	Encoder ground
X105				
B	2	B	B+	Encoder signal B + terminal
B-	2-	B-	B-	Encoder signal B - terminal
GND	-	-	-	Encoder ground
X106				
Z	3	Z	Z+	Encoder signal Z + terminal
Z-	3-	Z-	Z-	Encoder signal Z - terminal
GND	-	-	-	Encoder ground

Channels				Description
BTAC	Encoder			
A	1	A	A+	• Maximum signal frequency: 200 kHz • Signal levels:
A-	1-	A-	A-	
B	2	B	B+	
B-	2-	B-	B-	
Z	3	Z	Z+	
Z-	3-	Z-	Z-	

Encoder supply voltage	Logic “1”	Logic “0”
5 V	>2.5 V	<1.9 V
15 V	>7.5 V	<5.3 V
24 V	>12.1 V	<8.3 V

- Decision levels are automatically defined based on the daisy chained power supply voltage level.
- Input channels are isolated from the logic and ground.
- When the drive runs in the Forward direction, channel A should lead channel B by 90° (electrical).
- Channel Z: One pulse per revolution (used in positioning applications only).

Wiring – Encoder power supply interface

Connect the encoder power supply through the BTAC module. The same power supply feeds power to the signal interface of the BTAC module.

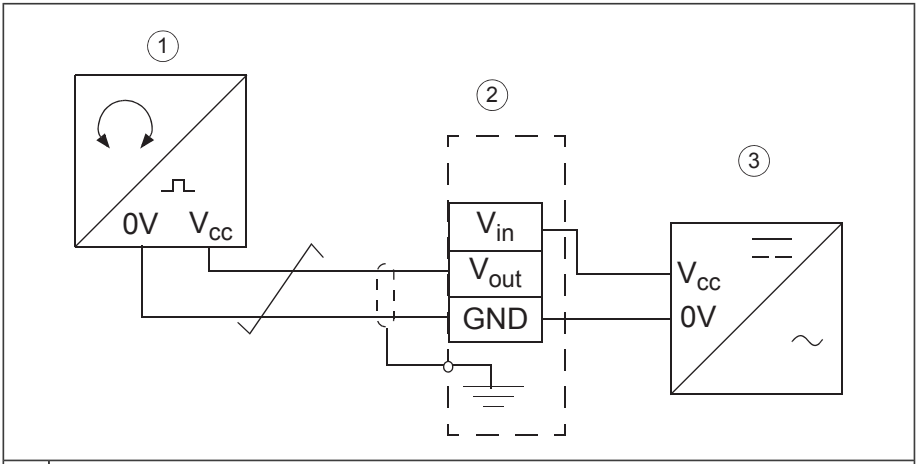

1	Encoder
2	BTAC module
3	Encoder power supply

When using a 24 V encoder, it is possible to supply power to the encoder and BTAC module from the 24 V DC auxiliary power output of the drive. If you supply power from the auxiliary power output, make sure that you do not exceed the maximum load capacity.

Use the following table to determine if you can use the auxiliary power output. Add the missing values and calculate the sum. The sum must be less than (or equal to) the maximum output current of the auxiliary power output. For the maximum output current, see the drive technical data.

Loads with the drive 24 V DC auxiliary voltage output			mA
Number of digital inputs used		× 15 mA each	
BTAC-02			50 mA
Encoder current requirement			
Requirements for other user connection(s) to drive 24 V DC auxiliary voltage output			
Total			

Wiring – Encoder

1. Remove the connector cover.
2. Determine the encoder wiring configuration:
   - Refer to *Phasing (page 209)* to determine if the encoder has a normal pulse order – encoder channel A pulse leads channel B pulse.
   - Refer to *Encoder output types (page 210)* to determine the encoder output type.
   - For push-pull types, refer to the manufacturer's recommendation for the connection. You can use single-ended or differential output.
3. Refer to *Wiring diagrams – Push-pull type encoder output (page 211)*, *Wiring diagrams – Open collector (sinking) encoder output (page 213)* or *Wiring diagrams – Open emitter (sourcing) encoder output (page 214)* to select the applicable diagram, and wire the encoder.
   Obey these guidelines:
   - Normally, ground the cable shield only at the drive end.
   - Do not route the encoder cables in parallel to power cables (for example, motor cables).
4. Make sure that the encoder phasing is correct. Refer to *Phasing (page 209)*.

Phasing

When the encoder is connected correctly, running the drive in the Forward (positive speed reference) direction should produce a positive encoder speed feedback.

Option A: **Oscilloscope test**. On incremental encoders, the two output channels, typically A and B or 1 and 2, are 90° (in phase) apart from each other. When rotated

clockwise, in most encoders channel A leads channel B. To determine the leading channel, refer to the encoder documentation or use an oscilloscope.

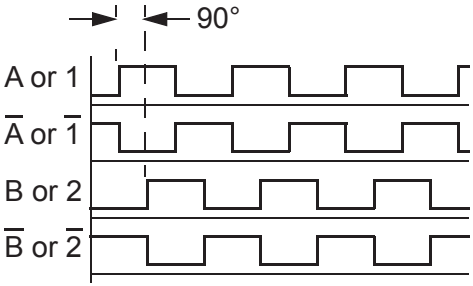

The diagram shows normal phasing: Pulse A leads (rises earlier than) pulse B.

Connect the encoder output channel that leads when the drive runs Forward to BTAC terminal A. Connect the output channel that trails to BTAC terminal B.

Option B: Functional test

For this test:

- Temporarily, switch the drive to the scalar mode. Set parameter *99.04 Motor ctrl mode* to 1 (SCALAR).
- Run the drive in the forward direction.
- Make sure that the value of parameter *90.13 Enc1 revol extension* increases.
- If the value of parameter *90.13 Enc1 revol extension* decreases, switch the A+/A- (or 1+/1-) connections.

Encoder output types

Push-pull	Open collector (sinking)	Open emitter (sourcing)
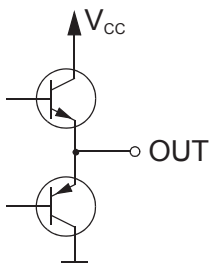	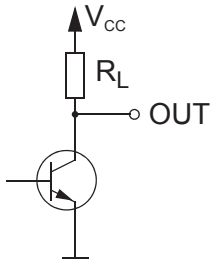	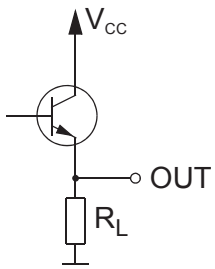
V_{CC} = Encoder input power supply voltage R_L = Load resistor at encoder output channel		

Wiring diagrams – Push-pull type encoder output

Diagram assumes normal pulse order in Forward rotation: Pulse A leads

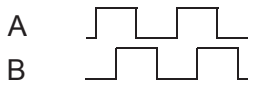

For encoders with pulse B leading, change the diagram:

- Wire encoder A and B to BTAC terminals B and A, respectively.
- Wire encoder A- and B- (if present) to BTAC terminals B- and A-, respectively.

Differential connection

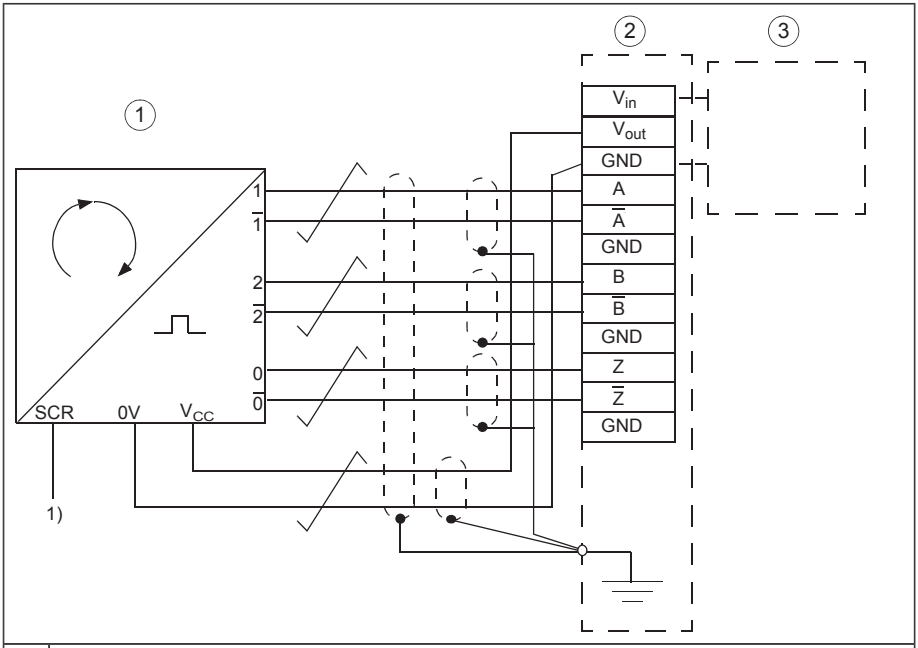

1	Encoder
2	BTAC module
3	Encoder power supply

Single-ended connection

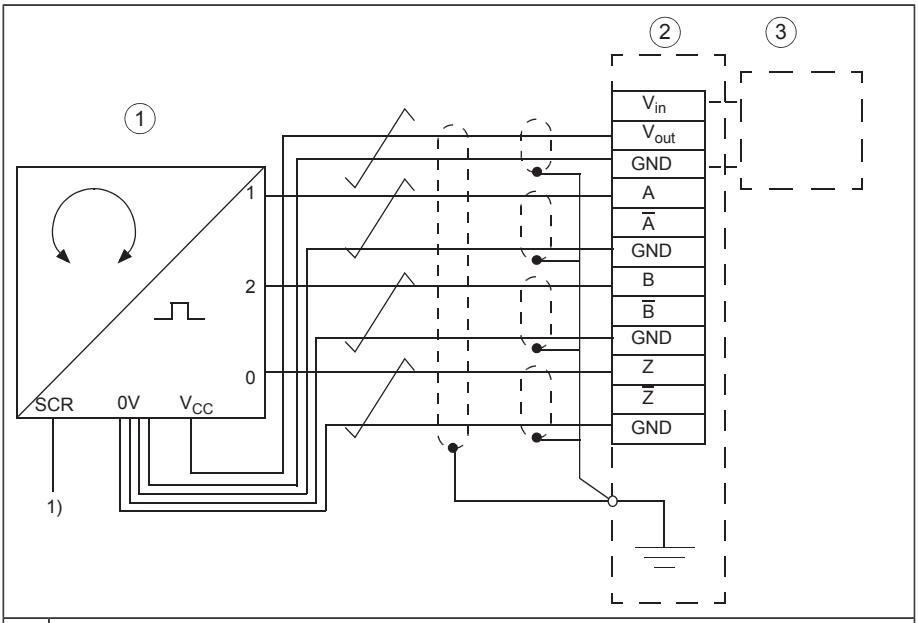

1	Encoder
2	BTAC module
3	Encoder power supply

Wiring diagrams – Open collector (sinking) encoder output

Diagram assumes normal pulse order in Forward rotation: Pulse A leads.

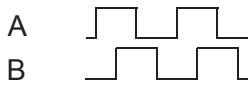

For encoders with pulse B leading, change the diagram: Wire encoder A and B to BTAC terminals B and A, respectively.

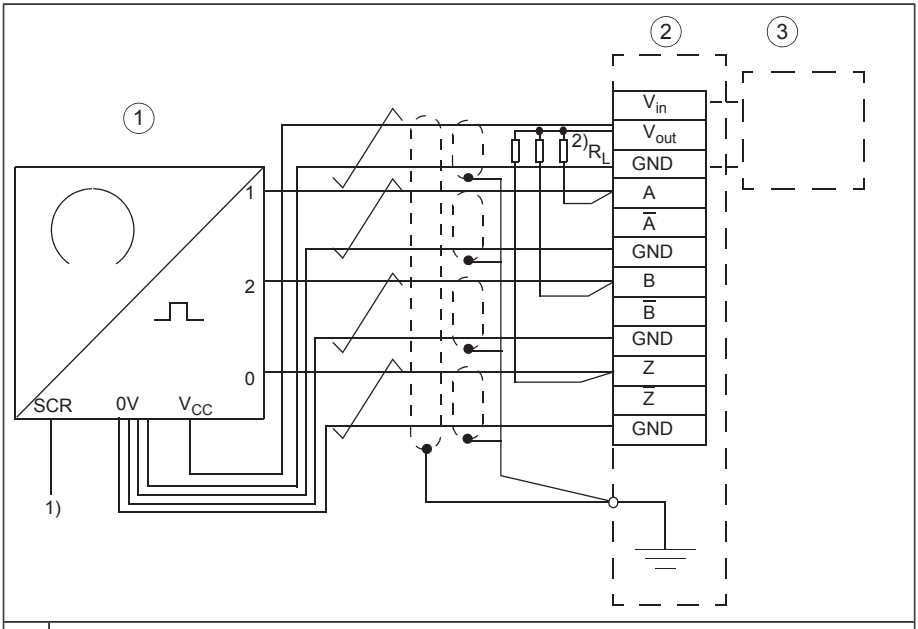

1	Encoder
2	BTAC module
3	Encoder power supply
4	Three identical resistors

The resistor size depends on the encoder power supply $V_{in} = V_{OUT}$:

V_{in}= 30 V	R_L = 2.7…3.0 kohm, 0.5 W
V_{in}= 24 V	R_L = 1.8…2.2 kohm, 0.5 W
V_{in}= 15 V	R_L = 1.0…1.5 kohm, 0.5 W
V_{in}= 5 V	R_L = 390…470 kohm, 0.125 W

Wiring diagrams – Open emitter (sourcing) encoder output

Diagram assumes normal pulse order in Forward rotation: Pulse A leads.

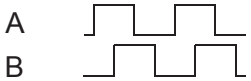

For encoders with pulse B leading, change the diagram: Wire encoder A and B to BTAC terminals B and A, respectively.

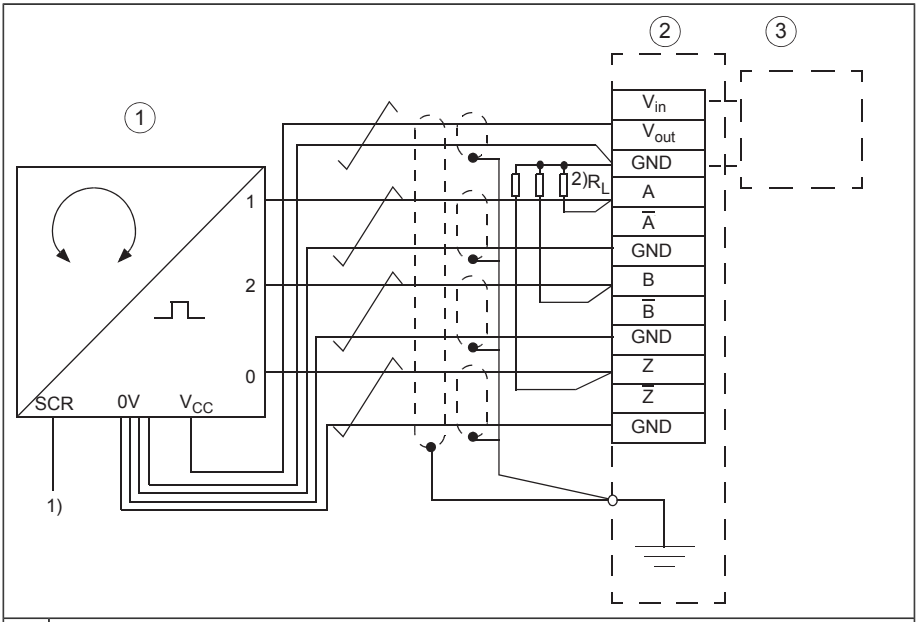

1	Encoder
2	BTAC module
3	Encoder power supply
4	Three identical resistors

The resistor size depends on the encoder power supply $V_{in} = V_{OUT}$:

V_{in}= 30 V	R_L = 2.7…3.0 kohm, 0.5 W
V_{in}= 24 V	R_L = 1.8…2.2 kohm, 0.5 W
V_{in}= 15 V	R_L = 1.0…1.5 kohm, 0.5 W
V_{in}= 5 V	R_L = 390…470 kohm, 0.125 W

Apply power

1. Turn on the input power to the drive.
2. Continue with Start-up.

Start-up

To configure the operation of the BTAC module:

1. Power up the drive.
2. Set parameters in groups *90 Feedback selection*, *91 Encoder adapter settings* and *92 Encoder 1 configuration*. These parameters display the configuration of the encoder interface modules.

Feedback selection

Use these parameters to select feedback or display feedback from the encoder.

No.	Name/Value	Description	Def/FbEq16/32
90 Feedback selection			
90.01	Motor speed for control	Displays the estimated or measured motor speed that is used for motor control, ie. final motor speed feedback selected by parameter *90.41 Motor feedback selection* and filtered by *90.42 Motor speed filter time*. This parameter is read-only.	-
	-32768…32767	Motor speed used for control.	1=1 rpm/100=1 rpm
90.02	Motor position	Displays the motor position (within one revolution) received from the source selected by parameter *90.41 Motor feedback selection*.	
	0 … 1 rev	Motor position.	32767=1 rev/100000000=1 rev
90.10	Enc1 speed	Displays encoder 1 speed in rpm. This parameter is read-only.	-
	-32768…32767	Encoder 1 speed.	1=1 rpm/100=1 rpm
90.11	Enc1 position	Displays the actual position of encoder 1 within one revolution. This parameter is read-only.	-
	0 … 1 rev	Encoder 1 position within one revolution.	32767=1 rev/100000000=1 rev

No.	Name/Value	Description	Def/FbEq16/32
90.13	Enc1 revol extension	Displays the revolution counter extension. The counter is incremented when encoder position wraps around in the positive direction, and decremented in the negative direction. The parameter is effective only if the position is absolute.The parameter value is updated for both single-turn and multiturn encoders. This parameter is read-only.	na/1=1
90.41	Motor feedback sel	Selects the source of motor speed and motor position used as feedbacks for speed control and motor model.	estimate
	estimate	A calculated speed estimate	0
	Encoder 1	Actual speed measured by encoder 1.	1
90.42	Motor speed filt time	Defines a filter time for motor speed feedback used for control.	3 ms
	0 … 10000 ms	Motor speed filter time.	1=1 ms/1=1 ms
90.45	Motor feedback fault	Selects how the drive reacts to loss of measured motor feedback.	Fault
	Fault	Drive trips on a 7301 Motor speed feedback fault.	0
	Warning	Drive generates a A7B0 Motor speed feedback warning and continues operation using estimated feedbacks. **Note:** Before using this setting, test the stability of the speed control loop with estimated feedback by running the drive on estimated feedback (see *90.41 Motor feedback sel*).	1
90.46	Force open loop	Defines the speed feedback used for motor control.	No
	No	The motor model uses the feedback selected by 90.41 Motor feedback sel.	0
	Yes	The motor model uses the calculated speed estimate (regardless of the setting of *90.41 Motor feedback sel*, which in this case only selects the source of feedback for the speed controller).	1
90.47	Enable motor encoder drift detection	Enables motor encoder drift detection.	Yes
	No	Does not generate an error if encoder drift is detected.	0
	Yes	Generates fault *7301 Motor speed feedback* if encoder drift is detected.	1

Encoder adapter settings

These parameters display the configuration of the encoder interface modules.

No.	Name/Value	Description	Def/FbEq16/32
91 Enc adapter settings			
91.10	Enc par refresh	Validates any changed encoder interface module parameters. This is needed for any parameter changes in groups *90…92* to take effect. After refreshing, the value reverts automatically to Done. **Note:** The parameter cannot be changed while the drive is running.	Done
	Done	Refreshing done.	0
	Configure	Refreshing.	1

Encoder configuration

This parameter group selects the settings for the encoder

No.	Name/Value	Description	Def/FbEq16/32
92 Encoder 1 configuration			
92.10	Pulses/rev	Defines the TTL or HTL pulse number per revolution.	32
	0…65535		1=1

Diagnostics

With parameter *90.45 Motor feedback fault*, you can select how the drive reacts when it detects that the encoder signal is lost.

- 90.45 = 0 (Fault) – The drive generates a fault (*7301 Motor speed feedback*), and the motor coasts to a stop.
- 90.45 = 1 (Warning) – The drive generates a warning (*A7B0 Motor speed feedback*) and continues operation using estimated feedbacks.

If the drive generates this fault or warning:

Code (hex)	Fault/Warning	Cause
7301	Motor speed feedback	No motor speed feedback is received
	4	Drift detected. Check for slippage between encoder and motor.
	3FC	Incorrect motor feedback configuration
	3FD	Incorrect motor speed
A7B0	Motor speed feedback	No motor speed feedback is received
	4	Encoder drift detected. Check for slippage between encoder and motor.
	3FC	Incorrect motor feedback configuration
	3FD	Incorrect motor speed

Technical data

Encoder interface

The encoder user interface is isolated with reinforced insulation from the DC potential.

Encoder type

- Incremental, TTL/HTL encoders
- Differential, single-ended, open collector, and open emitter encoder outputs (refer to *Encoder output types (page 210)*)
- Three channels A, B and Z
- Maximum pulse frequency: 200 kHz
- Encoder power supply range: 5…30 V

Encoder interface connectors

Four 3-pin (1×3) spring-clamp type terminal blocks, tin plated, 2.5 mm^2 wire size (14 AWG), pitch 5.0 mm.

Cable

The maximum permitted cable length is 100 m (328 ft).

Encoder and BTAC module power supply

- 50 mA (BTAC) + encoder current consumption (refer to the encoder data sheet)
- Voltage: 5…30 V DC (Depends on the encoder. Refer to the encoder data sheet.)

Back-up power supply for the drive

Refer to electrical installation instructions.

Internal connectors

Connector X102 provides encoder interface signals to the drive control board. Connector X102 data: 1×8 pin header, pitch 2.54 mm, height 33.53 mm.

Connector X100 serves as power supply interface between the BTAC module and the drive's control board. It provides back-up power supply in main power loss situations.

Connector X100 data: 2×4 pin header, pitch 2.54 mm, height 15.75 mm.

Dimensions

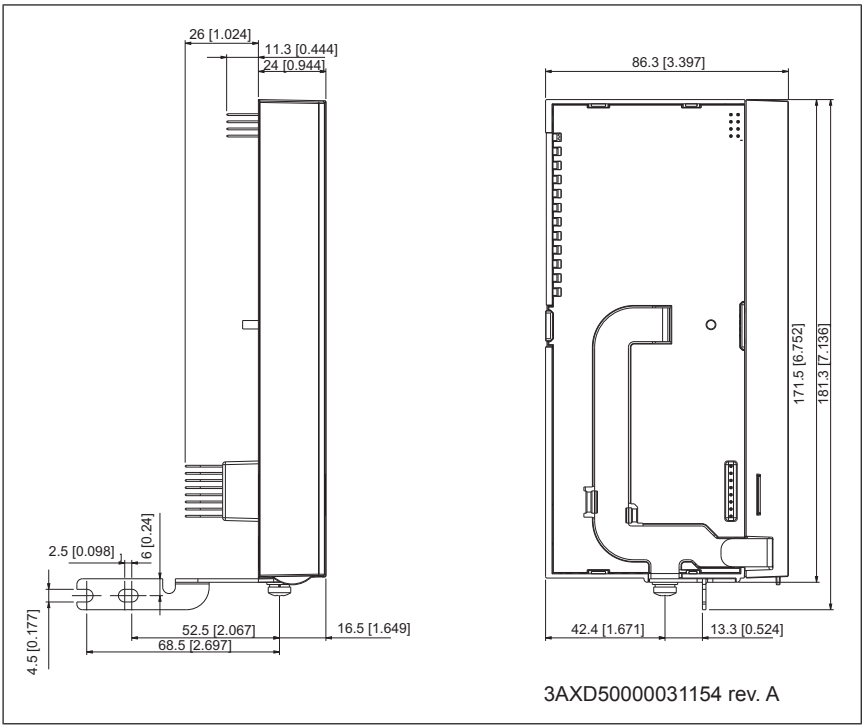
26 [1.024]
11.3 [0.444]
24 [0.944]
86.3 [3.397]
171.5 [6.752]
181.3 [7.136]
6 [0.24]
2.5 [0.098]
4.5 [0.177]
52.5 [2.067]
68.5 [2.697]
16.5 [1.649]
42.4 [1.671]
13.3 [0.524]
3AXD50000031154 rev. A

15

BREL-01 relay output extension module

Contents of this chapter

This chapter contains a description and technical data of the optional BREL-01 relay output extension module.

Safety instructions

WARNING!
Obey the safety instructions of the drive. If you ignore them, injury or death, or damage to the equipment can occur.

Hardware description

Product overview

BREL-01 relay output extension module (option +L511) adds four relay outputs to the drive.

Layout

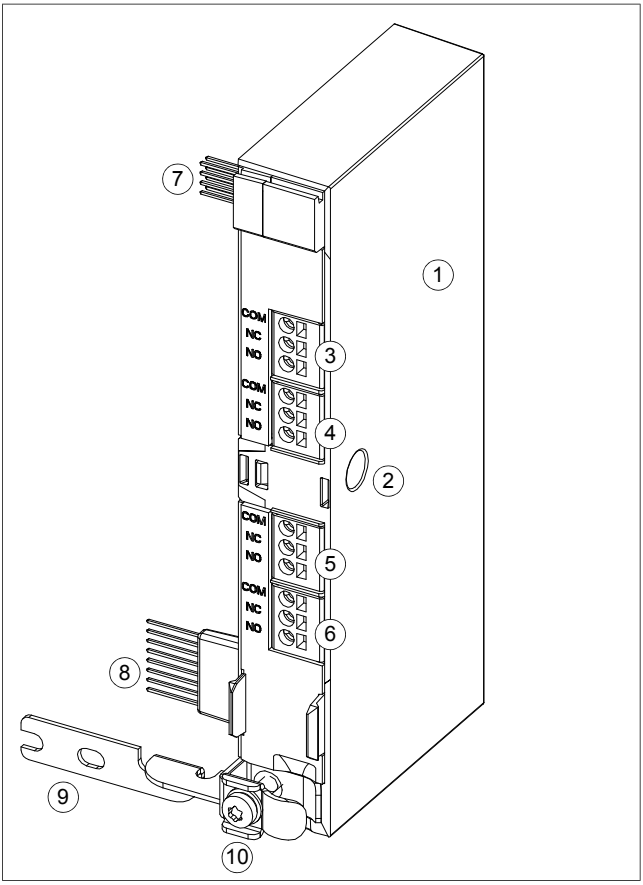

1. BREL-01 module
2. Locking screw hole
3. X103 connector
4. X104 connector
5. X105 connector
6. X106 connector
7. Internal X100 connector
8. Internal X102 connector
9. Grounding rail
10. Grounding screw

Mechanical installation

See the electrical installation instructions of the drive.

Electrical installation

Use 0.5 … 2.5 mm^2 (20 … 14 AWG) cable with a sufficient voltage rating.

If you connect an inductive load (relay or contactor coil, motor) protect the relay contacts with a varistor, RC filter (AC) or diode (DC). Install the protective component as close to the inductive load as possible. Do not install protective components at the relay output terminals.

Identification			Description
X103	4		Relay outputs RO4…RO7: Max. switching voltage: 250 V AC / 30 V DC Max. switching current: 2 A Galvanically isolated.
1	COM	Common	
2	NC	Normally closed	
3	NO	Normally open	
X104	5		
1	COM	Common	
2	NC	Normally closed	
3	NO	Normally open	
X105	6		
1	COM	Common	
2	NC	Normally closed	
3	NO	Normally open	
X106	7		
1	COM	Common	
2	NC	Normally closed	
3	NO	Normally open	

Start-up

To configure the operation of the relays added with the BREL-01 module:

1. Power up the drive.
2. Set the parameter *15.01 Extension module type* to 5 (BREL).
3. Use the control panel on the drive and set the parameters for relay outputs RO4…RO7 in *15 I/O extension module*. Refer to the *ACS380 Firmware manual* (3AXD50000029275 [English]) for parameter descriptions.

Configuration parameters

The configuration parameters of the BREL-01 module are in group *15 I/O extension module*.

No.	Name/Value	Description	Def / FbEq16/32
15 I/O extension module			
15.01	Extension module type	Activates (and specifies the type of) I/O extension module.	None
	BREL	External relay option BREL-01.	5
15.02	Detected extension module	I/O extension module detected on the drive.	None
	BREL	External relay option BREL-01.	5

No.	Name/Value	Description	Def / FbEq16/32
15.04	RO status	Displays the status of the relay outputs. This parameter is read-only.	1 = 1
	Bit 0 RO4	1 = Relay output 4 is ON.	-
	Bit 1 RO5	1 = Relay output 5 is ON.	-
	Bit 2 RO6	1 = Relay output 6 is ON.	-
	Bit 3 RO7	1 = Relay output 7 is ON.	-
15.05	RO force selection	The electrical statuses of the relay/digital outputs can be overridden for e.g. testing purposes. A bit in parameter 15.06 RO forced data is provided for each relay or digital output, and its value is applied whenever the corresponding bit in this parameter is 1.	1 = 1
	Bit 0 RO4	1 = Force relay output 4 to value of bit 0 of parameter *15.06 RO forced data*.	-
	Bit 1 RO5	1 = Force relay output 5 to value of bit 0 of parameter *15.06 RO forced data*.	-
	Bit 2 RO6	1 = Force relay output 6 to value of bit 0 of parameter *15.06 RO forced data*.	-
	Bit 3 RO7	1 = Force relay output 7 to value of bit 0 of parameter *15.06 RO forced data*.	-
15.06	RO forced data	Allows the data value of a forced relay or digital output to be changed from 0 to 3.	1 = 1
	Bit 0 RO4	Force the value of this bit to RO4, if so defined in parameter *15.05 RO force selection*.	-
	Bit 1 RO5	Force the value of this bit to RO5, if so defined in parameter *15.05 RO force selection*.	-
	Bit 2 RO6	Force the value of this bit to RO6, if so defined in parameter *15.05 RO force selection*.	-
	Bit 3 RO7	Force the value of this bit to RO7, if so defined in parameter *15.05 RO force selection*.	-
15.07	RO4 source	Selects a drive signal to be connected to relay output RO4.	Not energized
	Not energized	Output is not energized.	0
	Energized	Output is energized.	1
	For the complete parameter list, refer to the drive firmware manual.		…
15.08	RO4 ON delay	Defines the activation delay for relay output RO4.	0.0 s
	0.0 … 3000.0 s	Activation delay for RO4.	10 = 1 s
15.09	RO4 OFF delay	Defines the deactivation delay for relay output RO4.	0.0 s
	0.0 … 3000.0 s	Deactivation delay for RO4.	10 = 1 s
15.10	RO5 source	Selects a drive signal to be connected to relay output RO5.	Not energized

No.	Name/Value	Description	Def / FbEq16/32
	Not energized	Output is not energized.	0
	Energized	Output is energized.	1
	For the complete parameter list, refer to the drive firmware manual.		…
15.11	RO5 ON delay	Defines the activation delay for relay output RO5.	0.0 s
	0.0 … 3000.0 s	Activation delay for RO5.	10 = 1 s
15.12	RO5 OFF delay	Defines the deactivation delay for relay output RO5.	0.0 s
	0.0 … 3000.0 s	Deactivation delay for RO5.	10 = 1 s
15.13	RO6 source	Selects a drive signal to be connected to relay output RO6.	Not energized
	Not energized	Output is not energized.	0
	Energized	Output is energized.	1
	For the complete parameter list, refer to the drive firmware manual.		…
15.14	RO6 ON delay	Defines the activation delay for relay output RO6.	0.0 s
	0.0 … 3000.0 s	Activation delay for RO6.	10 = 1 s
15.15	RO6 OFF delay	Defines the deactivation delay for relay output RO6.	0.0 s
	0.0 … 3000.0 s	Deactivation delay for RO6.	10 = 1 s
15.16	RO7 source	Selects a drive signal to be connected to relay output RO7.	Not energized
	Not energized	Output is not energized.	0
	Energized	Output is energized.	1
	For the complete parameter list, refer to the drive firmware manual.		…
15.17	RO7 ON delay	Sets the activation delay for relay output 7.	0.0 s
	0.0…3000.0 s	Activation delay for relay output 7.	10 = 1 s
15.18	RO7 OFF delay	Sets the deactivation delay for relay output 7.	0.0 s
	0.0…3000.0 s	Deactivation delay for relay output 7.	10 = 1 s

Technical data

External connectors: Four 3-pin (1×3) spring-clamp type terminal blocks, tin plated, 2.5 mm^2 (14 AWG) wire size, pitch 5.0 mm.

Internal connectors: Connector X102 provides relay control signals from the control board: 1×8 pin header, pitch 2.54 mm, height 33.53 mm. Connector X100 is not in use in BREL-01: 2×4 pin header, pitch 2.54 mm, height 15.75 mm.

Dimensions:

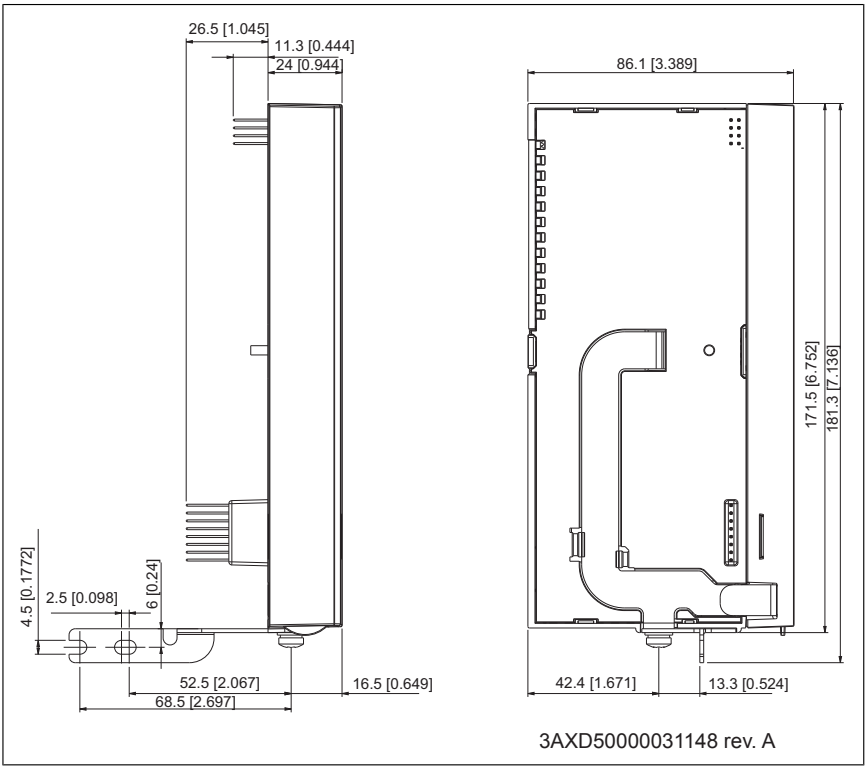
26.5 [1.045]
11.3 [0.444]
24 [0.944]
86.1 [3.389]
171.5 [6.752]
181.3 [7.136]
4.5 [0.1772]
2.5 [0.098]
6 [0.24]
52.5 [2.067]
68.5 [2.697]
16.5 [0.649]
42.4 [1.671]
13.3 [0.524]
3AXD50000031148 rev. A

16

BAPO-01 auxiliary power extension module

Contents of this chapter

This chapter contains a description and technical data of the optional BAPO-01 auxiliary power extension module.

Safety instructions

WARNING!
Obey the safety instructions of the drive. If you ignore them, injury or death, or damage to the equipment can occur.

Hardware description

The BAPO-01 auxiliary power extension module (option +L534) lets you use an external 24 V DC power supply with the drive. An external power supply is used to keep the drive control board energized during a power outage.

The BAPO-01 module has internal connections to provide back-up power to the control board (I/O, fieldbus). There is a DC to DC flyback converter power supply inside the module. This power supply takes 24 V DC as input and outputs 5 V DC to the control board to keep the processor and communication links on at all times.

Note: The BAPO-01 is not a battery.

If you change drive parameters when the control board is energized by the BAPO-01 module, force parameter saving by setting the value of parameter *96.07 PARAM SAVE* to (1) *SAVE*. Otherwise, changed data will not be saved.

Layout

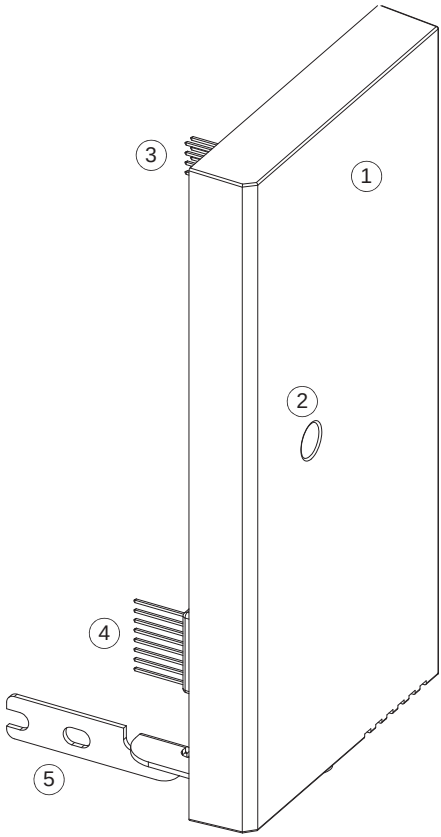

1	BAPO-01 module
2	Locking screw hole
3	Internal X100 connector
4	Internal X102 connector
5	Grounding rail

Mechanical installation

See the electrical installation instructions of the drive.

Electrical installation

Connect the external power supply to the +24 V and DGND terminals on the drive. See the electrical installation instructions of the drive.

Do not chain an external 24 V DC power supply to several drives. Each drive must be powered by a single 24 V DC power supply, or a separate 24 V DC output of one auxiliary power source.

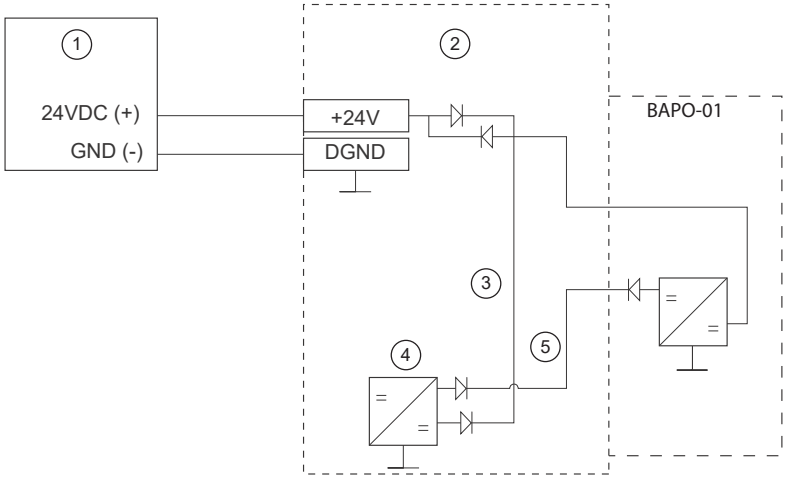

1	External power supply
2	Drive
3	+24 V internal
4	Main power supply
5	+5 V internal

Start-up

To configure the BAPO-01 module:

1. Power up the drive.
2. Set the parameter *95.04 Control board supply* to *1 (External 24V)*.

Technical data

Voltage and current rating for the auxiliary power supply: +24 V DC ±10%, max. 1000 mA (including internal fan load).

Power loss: Power losses with maximum load 4 W.

Dimensions:

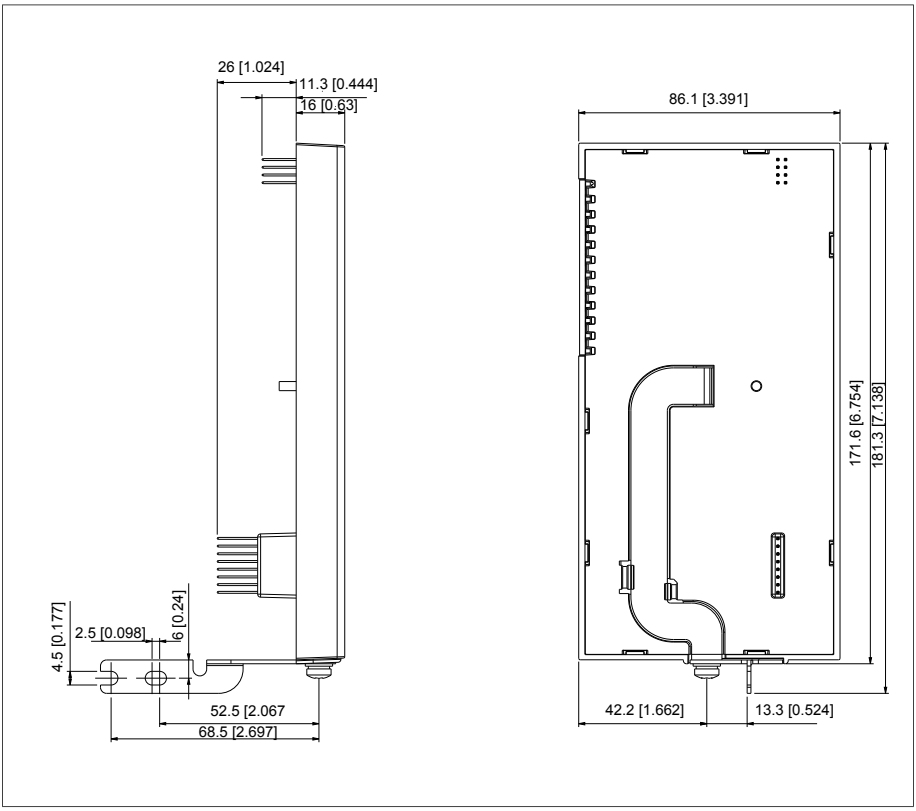

17

BIO-01 I/O extension module

Contents of this chapter

This chapter contains a description and technical data of the optional BIO-01 I/O extension module.

Safety instructions

WARNING!
Obey the safety instructions of the drive. If you ignore them, injury or death, or damage to the equipment can occur.

Hardware description

Product overview

BIO-01 (option +L515) is an I/O extension module to be used with a fieldbus adapter module. The BIO-01 module is installed between the drive and the fieldbus module.

BIO-01 has two digital inputs (DI4, DI5) and one analog input (A1). It also has two terminals (S1, S2) that can be configured with the switches on the module. S1 can be configured as analog output (AO1) or digital output (DO1). S2 can be configured as digital output (DO1) or digital input (DI3).

Layout

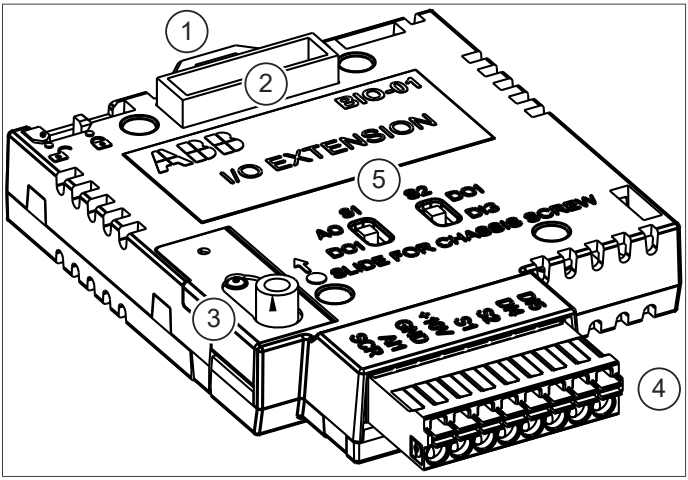

1. Locking tab
2. Option module slot
3. Chassis screw
4. I/O connector
5. Switches for configuring terminals S1 and S2

Mechanical installation

See the electrical installation instructions of the drive.

Before you install the BIO-01 option module, make sure that the chassis screw slider is in the top position. After the option module is installed, tighten the chassis screw and move the slider to the bottom position.

The BIO-01 option module kit comes with a higher cable clamp plate. Use this cable clamp plate to ground the wires that connect to the BIO-01 option module.

Terminal configuration

You must configure terminals S1 and S2 before you install the fieldbus module. Refer to the table that follows for the possible configurations:

Setting		**Result**		
Switch S1	**Switch S2**	**Terminal S1 functions as**	**Terminal S2 functions as**	**Supported configuration**
DO1 (default)	DI3 (default)	Digital output DO1	Digital input DI3	Yes
AO1	DI3 (default)	Analog output AO1	Digital input DI3	Yes
AO1	DO1	Analog output AO1	Digital output DO1	Yes
DO1 (default)	DO1	-	-	No

If you change the switch configuration while the drive is powered on, the drive will trip on a fault. Also, an unsupported configuration will cause the drive to trip on a fault.

Electrical installation

The BIO-01 module has removable spring clamp terminals. Use ferrules on the multistranded conductor ends.

The connection diagram below is applicable to drives with the BIO-01 I/O extension module when the ABB standard macro is selected (parameter *96.04*).

Connection	Terminal	Description	1)
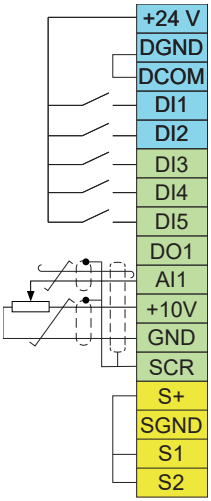	+24 V	Auxiliary voltage output +24 V DC, max. 250 mA	×
	DGND	Auxiliary voltage output common	×
	DCOM	Digital input common for all	×
	DI1	Stop (0) / Start (1)	×
	DI2	Forward (0) / Reverse (1)	×
	S2 (DI3)	Constant frequency/speed selection	
	DI4	Constant frequency/speed selection	
	DI5	Ramp set 1 (0) / Ramp set 2 (1)	
	S1 (DO1)	Not configured (DIO1)	
	AI1	Output frequency/speed ref: 0 … 10 V DC	
	+10V	Reference voltage +10 V DC (max. 10 mA)	
	GND	Analog circuit common / DO common	
	SCR	Signal cable shield	
	S+	Safe torque off. Both S1 and S2 circuits must be closed for the drive to start. (Factory connection.)	×
	SGND		×
	S1		×
	S2		×

1) × = on base unit, blank = on BIO-01 module.

Start-up

The BIO-01 module is automatically identified by the drive firmware. To configure the inputs and outputs, refer to the drive firmware manual.

Technical data

Control connection data: Spring type terminal blocks. Conductor size accepted by the terminals: 0.2 … 1.5 mm^2 (24 … 16 AWG). Exception: max. 0.75 mm^2 (18 AWG) for a multistranded conductor with a ferrule and plastic sleeve.

Internal connections of GND and SCR terminals

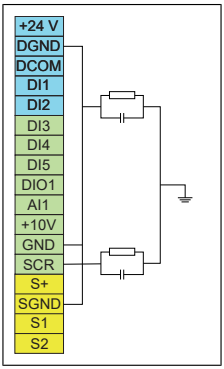

Dimensions

Note: BIO-01 is supplied with a high cover part (part number 3AXD50000190188) for the ACS380 drives. When used, it increases the drive depth by 15 mm (0.6 in).

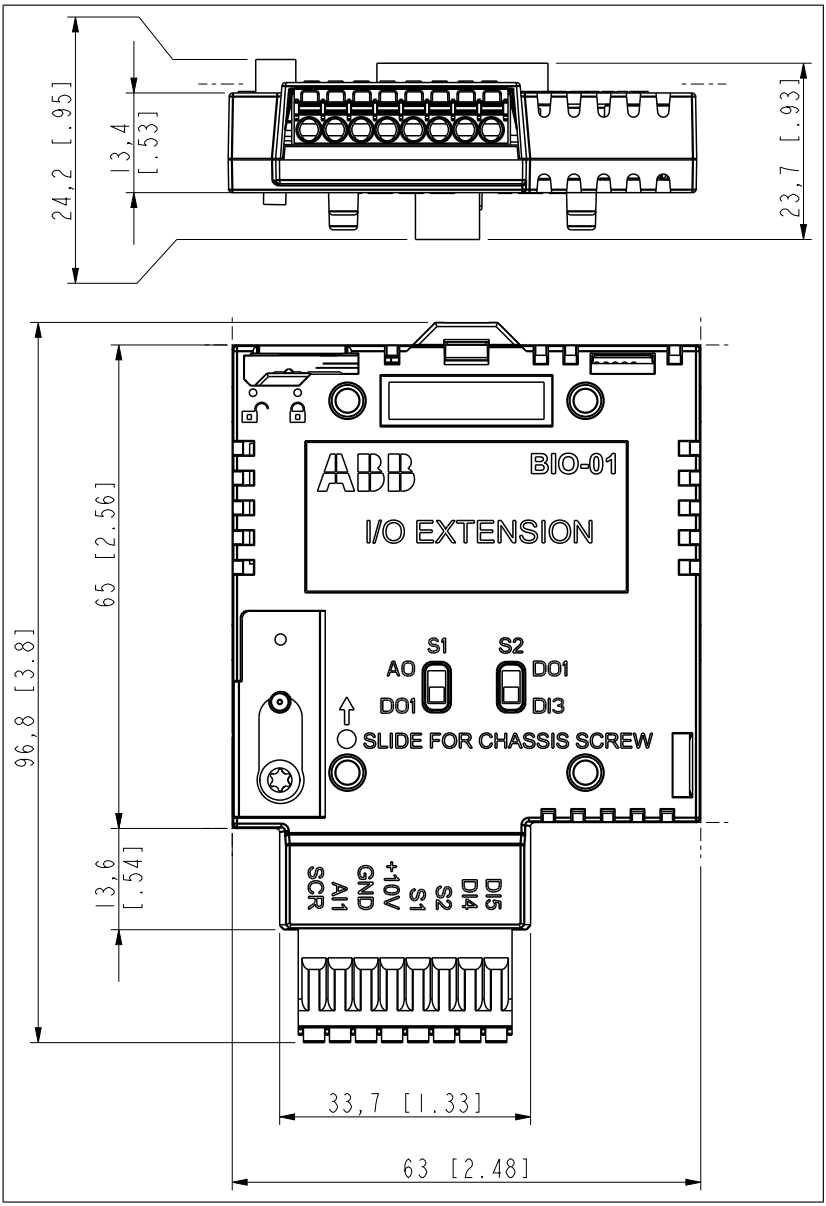

Further information

Product and service inquiries

Address any inquiries about the product to your local ABB representative, quoting the type designation and serial number of the unit in question. A listing of ABB sales, support and service contacts can be found by navigating to www.abb.com/searchchannels.

Product training

For information on ABB product training, navigate to new.abb.com/service/training.

Providing feedback on ABB manuals

Your comments on our manuals are welcome. Navigate to new.abb.com/drives/manuals-feedback-form.

Document library on the Internet

You can find manuals and other product documents in PDF format on the Internet at www.abb.com/drives/documents.

a2 (frozen)
PDF-A5
Created 2021-06-30, 14:40:59

www.abb.com/drives

3AXD50000029274E

© Copyright 2021 ABB. All rights reserved.
Specifications subject to change without notice.

3AXD50000029274 Rev E (EN) EFFECTIVE 2021-06-30