EOCR Electronic Over Current Relay

Make the most of your energy℠

Schneider Electric™

Whatever your process...

> Oil & gas, petrochemicals, mining, metals, minerals, water and wastewater treatment, food & beverage, pharmaceuticals, microelectronics, airports...

> **Our EOCR solutions adapt to the specific requirements of your continuous and critical process.**

Up to 70%

Source: Motor Decisions Matter℠
in USA - www.motorsmatter.org

The share of total electrical energy consumed by motors within the infrastructure and industrial sectors.

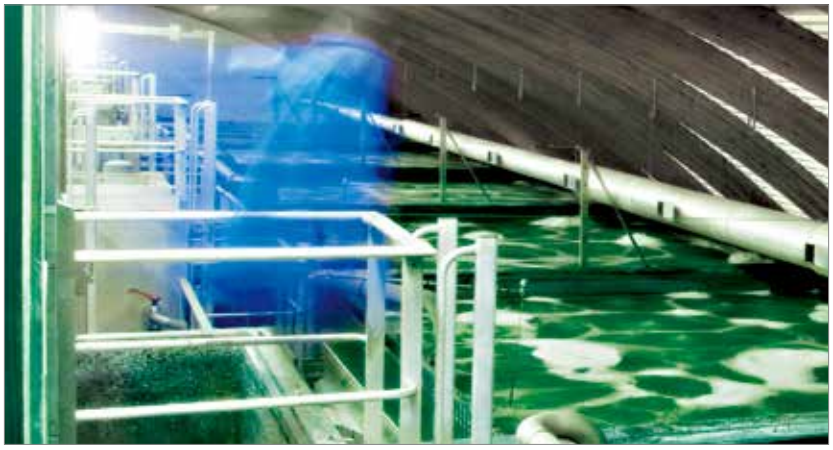

Schneider Electric™

Contents

EOCR Digital

	Product name	ISEM	IMME	I3DM/IFDM	I3MZ/IFMZ	I3MS/IFMS	I3M420/ IFM420
Control power		AC 100~240V DC/AC 24V 50/60 Hz	AC 100~240V DC 24V DC 100~125V 50/60 Hz	AC 100~240V DC/AC 24V 50/60 Hz	AC 100~240V DC/AC 24V 50/60 Hz	AC 100~240V DC/AC 24V 50/60 Hz	AC 100~240V DC/AC 24V 50/60 Hz
	Single phase	●	●	●	●	●	●
	3 phase	●	●	●	●	●	●
CT connection	Window hole	-	-	●	●	●	●
	Bottom hole	●	●	●	●	●	●
	Terminal	●	●	●	●	●	●
Protection function	Overcurrent	●	●	●	●	●	●
	Under Current	●	●	●	●	●	●
	Locked rotor when motor starts	●	●	●	●	●	●
	Locked rotor when motor runs	●	●	●	●	●	●
	Current phase loss	●	●	●	●	●	●
	Current reverse phase	●	●	●	●	●	●
	Unbalancing current	●	●	●	●	●	●
	Earth leakage	●	●	-	●	-	-
	short	●	-	-	-	●	-
	Thermal inverse	●	●	●	●	●	●
	Over voltage	●	-	-	-	-	-
	Under voltage	●	-	-	-	-	-
	Voltage phase loss	●	-	-	-	-	-
	Voltage unbalance	●	-	-	-	-	-
Indicator function	Alert output	●	●	●	●	●	●
	Ground current	●	●	-	●	-	-
	Average current	●	●	●	●	●	●
	line voltage	●	-	-	-	-	-
	Active/reactive power	●	-	-	-	-	-
	Energy	●	-	-	-	-	-
	Total motor run hour	●	●	●	●	●	●
	Trip indicator	●	●	●	●	●	●
	Trip history	●	●	●	●	●	●
	Load ratio(Bar-graph)	●	●	●	●	●	●
	Display type	5 digit 7-segment	5 digit 7-segment	5 digit 7-segment	5 digit 7-segment	5 digit 7-segment	5 digit 7-segment
Auxiliary functions	Alert output	●	●	●	-	-	-
	Password setting	●	●	●	●	●	●
	Fail safe On/Off	●	●	●	●	●	●
	low frequency	●	●	●	●	●	●
	Limitation of autoreset attempt	●	●	●	●	●	●
	Operation timer setiing	●	●	●	●	●	●
	Date/Time	●	●	-	-	-	-
	Built-in ZCT	●	●	-	-	-	-
	On/Off button	-	●	-	-	-	-
	Motor Control (Local/remote)	-	●	-	-	-	-
	Insulation resistance Pre-Alarm	●	-	-	-	-	-
	Fault history	●	-	-	-	-	-
	Metering Pulse	●	-	-	-	-	-
Comm. Function	4~20mA Loop current	●	-	-	-	-	●
	Communication function	●	●	●	●	●	●







	I3BZ/IFBZ	3DM2/FDM2	3MZ2/FMZ2	3BZ2/FBZ2	PMZ/PFZ	3DE/FDE	3EZ/FEZ	SSD
	AC 100~240V	AC 100~240V	AC 100~240V	AC 100~240V	AC 100~240V	AC 100~240V	AC 100~240V	AC 110V, 220V
	DC/AC 24V	DC/AC 24V	DC/AC 24V	DC/AC 24V	DC/AC 24V	DC/AC 24V	DC/AC 24V	DC/AC 24V
	50/60 Hz	50/60 Hz	50/60 Hz	50/60 Hz	50/60 Hz	50/60 Hz	50/60 Hz	50/60 Hz
	●	●	●	●	-	-	-	●
	●	●	●	●	●	●	●	●
	●	●	●	●	-	●	●	●
	●	●	●	●	●	●	●	-
	●	●	●	●	●	●	●	-
	●	●	●	●	●	●	●	●
	●	●	●	●	●	●	●	●
	●	●	●	●	●	●	●	-
	●	●	●	●	●	●	●	●
	●	●	●	●	●	●	●	-
	●	●	●	●	●	●	●	●
	●	●	●	●	●	●	●	-
	●	●	●	●	●	●	●	-
	●	-	●	●	●	-	●	-
	-	-	-	-	-	-	-	-
	●	-	-	-	●	-	-	-
	-	-	-	-	-	-	-	-
	-	-	-	-	-	-	-	-
	-	-	-	-	-	-	-	-
	-	-	-	-	-	-	-	-
	●	●	●	●	●	●	●	●
	●	-	●	●	●	-	●	-
	●	●	●	●	-	-	-	-
	-	-	-	-	-	-	-	-
	-	-	-	-	-	-	-	-
	-	-	-	-	-	-	-	-
	●	●	●	●	●	-	-	-
	●	●	●	●	●	●	●	●
	●	●	●	●	●	●	●	-
	●	●	●	●	●	-	-	-
	5 digit 7-segment	5 digit 7-segment	5 digit 7-segment	5 digit 7-segment	5 digit 7-segment	4 digit 7-segment	4 digit 7-segment	4 digit 7-segment
	-	●	-	-	●	●	-	-
	●	-	-	-	-	-	-	-
	●	●	●	●	●	●	●	●
	●	●	●	●	-	-	-	-
	●	●	●	●	●	-	-	-
	●	●	●	●	●	-	-	-
	-	-	-	-	-	-	-	-
	●	-	-	●	-	-	-	-
	-	-	-	-	-	-	-	-
	-	-	-	-	-	-	-	-
	-	-	-	-	-	-	-	-
	-	-	-	-	-	-	-	-
	-	-	-	-	-	-	-	-
	-	-	-	-	●	-	-	-
	●	-	-	-	-	-	-	-

EOCR Analog




	Product name	SS	AR	SP(01,10,20)	SP(40)
Control Voltage		DC/AC 24~240V 50/60 Hz	DC/AC 24~240V 50/60 Hz	AC 110/220V DC/AC 24V 50/60 Hz	AC 110V AC 220V DC/AC 24V 50/60 Hz
	Single phase	●	●	●	●
	3 phase	●	●	●	●
	Output contact	2-SPST(1a1b)	2-SPST(1a1b)	1-SPDT (1c)	1-SPDT (1c)
	Current sensing	2CT	2CT	2CT	2CT
current setting	Internal CT	0.5~6A 3.0~30A 5.0~60A	0.5~6A 3.0~30A 5.0~60A	0.3~1.2A 1~12A 5~25A	8~40A - -
CT Connection	Window hole	●	●	-	-
	Bottom hole	-	-	-	-
	Pin Type	-	-	●	●
	Terminal	-	-	-	-
Protection	Over current	●	●	●	●
	phase loss	▲	●	▲	●
	Inverse phase	-	-	-	-
	Ground	-	-	-	-
	locked rotor	▲	●	▲	▲
	Shunt	-	-	-	-
	Unbalancing	-	-	-	-
	Time characteristic	Definite time	Definite time	Definite time	Definite time
Additional function	Operation indicator	LED	LED	LED	LED
	No-voltages release function (N/R)	●	●	●	●
	Return	Manual/electrical	Auto	Manual/electrical	Manual/electrical
	Mounting	Panel/Rail	Panel/Rail	MC dierct mount	MC dierct mount
	Remarks				

Certification

Standard of Certifications	SS	AR	SP	SE2	DS1 DS3	DG DZ	4E	SSD	3DE FDE 3EZ/FEZ	3E420 FE420	PMZ PFZ	i3DM/iFDM i3MZ/iFMZ i3MS/iFMS i3M420/iFM420 3DM2/FDM2 3MZ2/FMZ2
Community European	●	●	●	●	●	●	●	●	●	●	●	●
Underwriters Laboratories Inc								●	● FDE Only			
Certificate for China Certification	●			●	●			●	●		●	●






	SE2	DS1(T)	DS3(T)	DG(T)	DZ(T)	4E
	DC/AC 24~240V	DC/AC 24~240V	DC/AC 24~240V	AC 110V AC 220V DC/AC 24V	AC 110V AC 220V DC/AC 24V	AC 110/220V -
	50/60 Hz	50/60 Hz	50/60 Hz	50/60 Hz	50/60 Hz	50/60 Hz
	●	-	-	-	-	-
	●	●	●	●	●	●
	1-SPDT (1c)	2-SPST(1a1b)	2-SPST(1a1b)	2-SPST(1a1b)	1-SPDT (1c)	1-SPDT (1c)
	2CT	3CT	3CT	3CT	3CT	3CT
	0.5~6A	0.5~6A	0.5~6A	0.5~6A	0.5~6A	1~6A
	3.0~30A	3.0~30A	3.0~30A	3.0~30A	1.0~10A	
	5.0~60A	-	5.0~60A	-	5.0~60A	
	-	-	-	-	-	●
	●	●	●	●	●	-
	-	-	-	-	-	-
	-	●	●	●	●	-
	●	●	●	●	●	●
	▲	●	●	●	●	●
	-	-	●	●	●	-
	-	-	-	●	●	●
	▲	●	●	●	●	▲
	-	-	-	●	●	-
	-	-	-	-	-	●
	Definite time	Inverse time	Definite time	Definite time	Definite time	Inverse time
	LED	LED(cause indicator)	LED(cause indicator)	5LED(cause indicator)	5LED(cause indicator)	5LED(cause indicator)
	●	●	●	●	●	●
	Manual/electrical	Manual/electrical	Manual/electrical	Manual/electrical	Manual/electrical	Manual/electrical
	Panel/Rai	Panel/Rail	Panel/Rail	DG: Panel DGT: Panel/Rail	DZ: Panel DZT: Panel/Rail	Panel/Rail
				Residual current detection	Zero phase current detection	Zero phase current detection

*1. ▲ Trip by Over current
*2. (T): Terminal type.

	i3BZ iFBZ 3BZ2 FBZ2	iMME	iSEM	DCL DUCR DOCR-S/H DUCR-S/H	EOVR EUVR	EVR-PD EVR-FD	ELR EFR EGR SDDR PMR
	●	●	●	●	●	●	●
						●	● PMR Only

ISO 9001

ISO 14001

EOCR Application



Type	DC protection relay		AC voltage protection relay			DC voltage protection relay		
Model	DCL/DUCR	DOCR-S/H DUCR-S/H	EOVR	EUVR	EVR-PD EVR-FD	DOVR	DUVR	DVR
Protection function	Over current/ Under current	Over current/ Under current	Over voltage	Under voltage	Over voltage Under voltage phase loss/ phase reverse/ Unbalance	Over voltage	Under voltage	Over current/ Under current
Control Voltage	AC 110/220V	DC/AC 24V	AC 110V	AC 110V	AC 110~150V	AC 110/220V	AC 110/220V	DC/AC 24V
	AC 380/440V	DC/AC 85~250V	AC 220V	AC 220V	AC 220~300V	-	-	DC/AC 85~250V
	-	-	AC 380V	AC 380V	AC 380~500V	-	-	-
	-	-				-	-	-
Frequency	50/60 Hz	50/60 Hz	50/60 Hz	50/60 Hz	For 50Hz, 60Hz	-	-	-
Output contact	1-SPDT (1c)	1-SPDT (1c)	1-SPDT (1c)	1-SPDT (1c)	1-SPDT (1c)	1-SPDT (1c)	1-SPDT (1c)	1-SPDT (1c)
Features	Shunt 조합형	Digital type	Single phase	Single phase	3 phase	DC 1 ~ 10V	DC 3~30V	Digital type
	Secondary shunt : 10~70mVDC	Shunt type: Half sensor type	Return time 0.5sec ~30sec	Return time 0.5sec ~30sec	AC 110~150V	DC 3~30V	DC 10~ 110V	OVR DC 110~160V DC 220~320V
	-	-	-	-	AC 220~300V	DC 10~ 110V	DC 20~220V	UVR DC 60~110V DC 160~220V
	-	-	-	-	AC 380~500V	DC 20~220V	-	-
	-	-	-	-	Digital type	-	-	-
Additional function: Time characteristics	0.2~30sec	0.5~25sec	0.2~10sec	0.2~10sec	Separate operation time	0.2~30sec	0.2~30sec	Separate operation time
Additional function: Operation indicator	LED	4 digit 7-segment	LED	LED	4 digit 7-segment	LED	LED	4 digit 7-segment
Additional function: No-voltagee release function(N/R)	●	-	-	●	●	-	-	●
Additional function: Return	Manual/ electrical/Auto	Manual/ electrical/Auto	Manual/ electrical/Auto	Manual/ electrical/Auto	Manual/ electrical/Auto	Manual/ electrical/Auto	Manual/ electrical/Auto	Manual/ electrical/Auto
Mounting	Panel/Rail	Panel/Rail	Panel/Rail	Panel/Rail	Panel/Rail	Panel	Panel	Panel/Rail
Remark								

Application relay

Accessory

	SDDR	ELR	EFR	EGR	PMR	3CT	2CT	ZCT	RJ45 Cable
	Motor restart relay	Ground fault protection	Ground fault protection	Ground fault protection	Phase reverse/ loss/ Voltage unbalance	EOCR Current Transformer	EOCR Current Transformer	Zero phase Current Transformer	Cable
	AC 110V	AC/DC 100~240V	AC 110V	AC 110/220V	AC 220V	100 : 5	100 : 5	ZCT-035	RJ45-00H
	AC 220V	-	AC 220V	-	AC 440V	150 : 5	150 : 5	ZCT-080	RJ45-001
	-	-	-	-	-	200 : 5	200 : 5	ZCT-120	RJ45-001H
	-	-	-	-	-	300 : 5	300 : 5		RJ45-002
	50/60 Hz	50/60 Hz	50/60 Hz	50/60 Hz	50/60 Hz	400 : 5	400 : 5		RJ45-003
	1SPST	1-SPDT (1c)	1-SPDT (1c)	1-SPDT (1c)	1-SPDT (1c)				
	정전지연시간	0.03A~3A	0.1~2.5A	05: 30~500mA					
	재기동 지연 시간			10: 100~ 1000mA					
	A/B 타입 설정 가능			20: 500~ 2500mA					
	-								
	-								
	SDDT: 0.5~5sec DOMT: off.1~30sec"	0.2~2sec	0.2~2sec	0.2~2sec	Phase reverse(0.1sec) Phase loss(1sec) Voltage unbalance(5sec)				
	LED	LED	LED	LED					
	-	-	-	-	●				
	-	Manual/ electrical	Manual/ electrical	Manual/ electrical/Auto	Manual/ electrical				
	Socket	Embeded in panel mounting	Embeded in panel mounting	Panel / Rail	Panel / Rail				
		Zero phase current detection	Residual current detection	Zero phase current detection					

Digital Relay for Motor Protection

Schneider Electric

Schneider Electric

Digital Products

3DE, FDE, 3EZ, FEZ

- The first multi-functional multi-relay
- Displays trip causes and load factors
- Earth fault protection, with leakage current display
- Designated as New Electric Power Technology No. 5 (Ministry of Trade, Industry and Energy)
- Parts integration (ammeter, transducer, A/S switch, timer function)

nEOCR

3DM2 (Window/Bottom/Terminal), FDM2

- Model integration, performance improvement
- RoHS certified
- Thermal overload inverse protection added
- Convenient CT hole structure

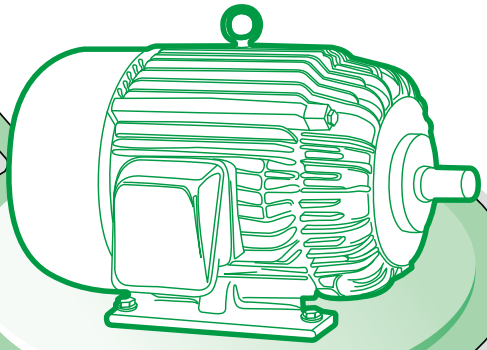

Analog Products

SS, SP, DS3, DZ

- The first motor protection relay
- Replaces thermal relays
- Convenient to use
- Over 10 million units manufactured to date

Application Products

PMR, SDDR-C, EVR-FD, EGR

- Protection management according to voltage
- DC motor protection management
- Power outage shutdown delay function
- Load limiter and more

Application Products Other Than the AC Over Current Protection Method

i3DM2, iFDM2, i3M420
• Modbus RS-485 Communication

Next Generation Smart Motor Protection Relay

Offers a total solution capable of protecting and monitoring the current, voltage, and electrical energy of a motor simultaneously!

EOCR-iSEM:

- The most optimal product for implementing Smart MCC.
- A single-device product that integrates a power meter and EOCR product to reduce maintenance costs.
- Can achieve an energy savings of more than 10% by measuring current, voltage, and electric energy in real time via an unmanned management system.
- Offers more efficient maintenance and stability for motors at work sites by recording the fault wave.
- Saves space, time, and wires during installation with the built-in Zero-phase Current Transformer (ZCT).
- Added protection function against high earth fault current for more stable motor management.
- Achieves optimal motor protection by applying various motor protection methods and a wide range of electrical current.
- Capable of checking motor insulation status and displaying alerts.

Contents

New Digital

		New digital	
		 	
Model		**3DM2/ FDM2**	**3MZ2/ FMZ2**
Control voltage		AC/DC 100 ~ 240V	AC/DC 100~240V
		DC/AC 24V	DC/AC 24V
Frequency		50/60 Hz	50/60 Hz
Single phase		●	●
Three phase		●	●
CT type	**Window hole**	●	●
	Bottom hole	●	●
	Terminal	●	●
	Overcurrent	●	●
	Undercurrent	●	●
	Stall	●	●
	Jam	●	●
Protection	**Phase loss**	●	●
function	**Phase reversal**	●	●
	Imbalance	●	●
	Ground fault	-	●
	Short circuit	-	-
	Thermal inverse	-	-
4-20mA output		-	-
Additional function	**Alert output**	A, F, H	-
	Bar graph	●	●
	Display	5 Digit 7 Segment	5 Digit 7 Segment
	Password function	-	-
	Fail safe ON/OFF	●	●
	Trip cause display and Store	●	●
	Total running hour	●	●
	Running hour timer	●	-
	Reset	Manual/Auto/Electric	Manual/Auto/Electric
Comm. protocol		-	-
Existing model		3DD, 3DE, 3DM	3DZ, 3EZ, 3MZ
		FD, FDE, FDM	FDZ, FEZ, FMZ

New digital with Communication

	i3DM / iFDM	i3MZ / iFMZ	i3M420 / iFM420	i3MS / iFMS
	AC/DC 100~240V	AC/DC 100~240V	AC/DC 100~240V	AC/DC 100~240V
	DC/AC 24V	DC/AC 24V	DC/AC 24V	DC/AC 24V
	50/60 Hz	50/60 Hz	50/60 Hz	50/60 Hz
	●	●	●	●
	●	●	●	●
	●	●	●	●
	●	●	●	●
	●	●	●	●
	●	●	●	●
	●	●	●	●
	●	●	●	●
	●	●	●	●
	●	●	●	●
	●	●	●	●
	●	●	●	●
	-	●	-	-
	-	-	-	●
	●	●	●	●
	-	-	●	-
	A, F, H	-	-	-
	●	●	●	●
	5 Digit 7 Segment	5 Digit 7 Segment	5 Digit 7 Segment	5 Digit 7 Segment
	●	●	●	●
	●	●	●	●
	●	●	●	●
	●	●	●	●
	●	-	-	-
	Manual/Auto/Electric	Manual/Auto/Electric	Manual/Auto/Electric	Manual/Auto/Electric
	MODBUS RS-485	MODBUS RS-485	MODBUS RS-485	MODBUS RS-485
	3DD, 3DE, 3DM	3DZ, 3EZ, 3MZ	3D420, 3E420, 3M420	3DS, FDS, 3MS, FMS
	FD, FDE, FDM	FDZ, FEZ, FMZ	FD420, FE420, FM420	

New Digital

Selection guide

Old model	Measurement method	Operation TCC	Reset	Mounting	Protections function			Additional function		New model
3DD	3CT	Definite TCC • Inverse TCC	Manual	Panel • Din-Rail	Overcurrent, Phase loss, Phase reversal, Lock rotor, Imbalance	–	–	Alert	Trip cause display	3DM2 or i3DM
3DE			Manual			Under current			Trip cause display-store the latest three histories.	
3DM			Manual Auto						Bar graph, Running hour timer, Trip cause display-store the latest three histories.	
FD			Manual	Panel Din-Rail Flush Mount		–			Bar graph, Trip cause display	FDM2 or iFDM
FDE			Manual			Under current			Bar graph, Trip cause display-store the latest three histories.	
FDM			Manual Auto						Bar graph, Running hour timer, Trip cause display-store the latest three histories.	
3DZ	3CT	Definite TCC • Inverse TCC	Manual	Panel Din-Rail	Overcurrent, Phase loss, Phase reversal, Lock rotor, Imbalance	–	Ground Fault	–	Trip cause display	3MZ2 or i3MZ
3EZ			Manual			Under current		–	Trip cause display-store the latest three histories.	
3MZ			Manual Auto					–	Bar graph, Running hour timer, Trip cause display-store the latest three histories.	
FDZ			Manual	Panel Din-Rail Flush Mount		–		–	Bar graph, Trip cause display	FMZ2 or iFMZ
FEZ			Manual			Under current		–	Bar graph, Trip cause display-store the latest three histories.	
FMZ			Manual Auto					–	Bar graph, Running hour timer, Trip cause display-store the latest three histories.	
3D420	3CT	Definite TCC • Inverse TCC	Manual	Panel Din-Rail	Overcurrent, Phase loss, Phase reversal, Lock rotor, Imbalance	–	–	–	Trip cause display	i3M420
3E420			Manual			Under current		–	Trip cause display-store the latest three histories.	
3M420			Manual Auto					–	Bar graph, Running hour timer, Trip cause display-store the latest three histories.	
FD420			Manual	Panel Din-Rail Flush Mount		–		–	Bar graph, Trip cause display	iFM420
FE420			Manual			Under current		–	Bar graph, Trip cause display-store the latest three histories.	
FM420			Manual Auto					–	Bar graph, Running hour timer, Trip cause display-store the latest three histories.	
3DS	3CT	Definite TCC • Inverse TCC	Manual	Panel Din-Rail	Overcurrent, Phase loss, Phase reversal, Lock rotor, Imbalance	–	Short circuit	–	Bar graph, Trip cause display	i3MS
3MS			Manual Auto			Under current			Bar graph, Running hour timer, Trip cause display-store the latest three histories.	
FDS			Manual	Panel Din-Rail Flush Mount		–			Bar graph, Trip cause display	iFMS
FMS			Manual Auto			Under current			Bar graph, Running hour timer, Trip cause display-store the latest three histories.	

Selection guide

Old reference	New reference	Display	Cable	Option
				ZCT
3DD-05DB, 3DD-60DB, 3DE-WRDB, 3DM-WRDB	3DM2-WRDBW(T)	-	-	-
	3DM2-WRDBH(T)	-	-	-
3DD-05DZ7, 3DD-60DZ7, 3DE-WRZF7, 3DE-WRDZ7, 3DMWRDZ7	3DM2-WRDUW	-	-	-
	3DM2-WRDUH	-	-	-
FD-05DBW(T), FD-60DBW(T), FDE-WRDBW(T), FDMWRDBW(T)	FDM2-WRDBW	EOCR-PDM	CABLE-RJ45-xxx	-
	FDM2-WRDBH	EOCR-PDM	CABLE-RJ45-xxx	-
FD-05DZ7W(T), FD-60DZ7W(T), FDE-WRDF7W(T), FDMWDZ7W(T), 3DM-WDZ7W(T)	FDM2-WRDUW	EOCR-PDM	CABLE-RJ45-xxx	-
	FDM2-WRDUH	EOCR-PDM	CABLE-RJ45-xxx	-
3DZ-05ABA(B), 3DZ-60ABA(B), 3EZ-WRABA, 3MZWRABA(B)	3MZ2-WRABW	-	-	ZCT-xxx
	3MZ2-WRABH	-	-	ZCT-xxx
3DZ-05CBA(B), 3DZ-60CBA(B), 3MZ-WRCBA(B)	3MZ2-WRCBW	-	-	ZCT-xxx
	3MZ2-WRCBH	-	-	ZCT-xxx
3DZ-05AZ7A(B), 3DZ-60AZ7A(B), 3EZ-WRAF7A, 3EZ-WRAM7A, 3MZ-WRAZ7W(T)A(B)	3MZ2-WRDBW	-	-	ZCT-xxx
	3MZ2-WRDBH	-	-	ZCT-xxx
3DZ-05CZ7A(B), 3DZ-60CZ7A(B), 3MZ-WRCZ7W(T)A(B)	3MZ2-WRAUW	-	-	ZCT-xxx
	3MZ2-WRAUH	-	-	ZCT-xxx
3DZ-05DBA(B), 3DZ-60DBA(B), 3MZ-WRDBA(B)	3MZ2-WRCUW	-	-	ZCT-xxx
	3MZ2-WRCUH	-	-	ZCT-xxx
3DZ-05DZ7A(B), 3DZ-60DZ7A(B), 3MZ-WRDZ7W(T)A(B)	3MZ2-WRDUW	-	-	ZCT-xxx
	3MZ2-WRDUH	-	-	ZCT-xxx
FDZ-05ABW(T)A(B), FDZ-60ABW(T)A(B), FEZ-WRABW(T)A, FMZ-WRABW(T)A(B)	FMZ2-WRABW	EOCR-PDM	CABLE-RJ45-xxx	ZCT-xxx
	FMZ2-WRABH	EOCR-PDM	CABLE-RJ45-xxx	ZCT-xxx
FDZ-05CBW(T)A(B), FDZ-60CBW(T)A(B), FMZWRCBW(T)A(B)	FMZ2-WRCBW	EOCR-PDM	CABLE-RJ45-xxx	ZCT-xxx
	FMZ2-WRCBH	EOCR-PDM	CABLE-RJ45-xxx	ZCT-xxx
FDZ-05DBW(T)A(B), FDZ-60DBW(T)A(B), FMZWRDBW(T)A(B)	FMZ2-WRDBW	EOCR-PDM	CABLE-RJ45-xxx	ZCT-xxx
	FMZ2-WRDBH	EOCR-PDM	CABLE-RJ45-xxx	ZCT-xxx
FDZ-05AZ7W(T)A(B), 3DZ-60AZ7W(T)A(B), FEZWRAF7W(T)A, 3EZ-WRAM7W(T)A, 3MZ-WRABW(T)A(B)	FMZ2-WRAUW	EOCR-PDM	CABLE-RJ45-xxx	ZCT-xxx
	FMZ2-WRAUH	EOCR-PDM	CABLE-RJ45-xxx	ZCT-xxx
FDZ-05CZ7W(T)A(B), 3DZ-60CZ7W(T)A(B), FMZWRCZ7W(T)A(B)	FMZ2-WRCUW	EOCR-PDM	CABLE-RJ45-xxx	ZCT-xxx
	FMZ2-WRCUH	EOCR-PDM	CABLE-RJ45-xxx	ZCT-xxx
FDZ-05DZ7W(T)A(B), 3DZ-60DZ7W(T)A(B), FMZWRDZ7W(T)A(B)	FMZ2-WRDUW	EOCR-PDM	CABLE-RJ45-xxx	ZCT-xxx
	FMZ2-WRDUH	EOCR-PDM	CABLE-RJ45-xxx	ZCT-xxx
3D420-059, 3D420-609, 3E420-WR9, 3M420-WR9	i3M420-WRDBW	-	-	-
	i3M420-WRDBH	-	-	-
3D420-053, 3D420-603, 3D420-056, 3D420-606, 3E420-WR91, 3M320-WR3, 3M420-WR6	i3M420-WRDUW	-	-	-
	i3M420-WRDUH	-	-	-
FD420-0539, FD420-6039, FD420-0569, FD420-6069, FE420-WR91(3), FM420-WR91(3)	iFM420-WRDBW	EOCR-PDM	CABLE-RJ45-xxx	-
	iFM420-WRDBH	EOCR-PDM	CABLE-RJ45-xxx	-
FD420-0531(3), FD420-6031(3), FD420-0561(3), FD420-6061(3), FE420-WR3(1), FE420-WR6(1), FM420-WR31(3), FM420-WR61(3)	iFM420-WRDUW	EOCR-PDM	CABLE-RJ45-xxx	-
	iFM420-WRDUH	EOCR-PDM	CABLE-RJ45-xxx	-
3DS-05DB, 3DS-20DB, 3MS-05DB, 3MS-20DB	i3MS-WRDBW	-	-	-
	i3MS-WRDBH	-	-	-
3DS-05DZ7, 3DS-20DZ7, 3MS-05DZ7, 3MS-20DZ7	i3MS-WRDUW	-	-	-
	i3MS-WRDUH	-	-	-
FDS-05DBW(T), FDS-20DBW(T), FMS-05DBW(T), FMS-20DBW(T)	iFMS-WRDBW	EOCR-PDM	CABLE-RJ45-xxx	-
	iFMS-WRDUH	EOCR-PDM	CABLE-RJ45-xxx	-
FDS-05DZ7W(T), FDS-20DZ7W(T), FMS-05DZ7W(T), FMS-20DZ7W(T)	iFMS-WRDBW	EOCR-PDM	CABLE-RJ45-xxx	-
	iFMS-WRDUH	EOCR-PDM	CABLE-RJ45-xxx	-

EOCR-i Series (with communication)

Basic model : EOCR-i3DM (Z, S, 420) / iFDM (Z, S, 420)

EOCR-i3DM Window type

EOCR-i3DM Bottom hole type

EOCR-iFDM Window type

EOCR-iFDM Bottom hole type

EOCR-i3DM Terminal type

EOCR-iFDM Terminal type

General features

- Micro-Controller Unit based
- Real time processing / High precision
- Protections : Over current, Under current, Phase loss, Phase reversal, Stall, Jam, Current imbalance, Earth fault **(i3MZ/iFMZ)**, Short circuit **(i3MS/iFMS)**
- **Thermal protection** / Inverse available up to 32Amps without external CTs.
- Auxiliary functions : Fail safe, Pre-alarm **(i3DM/iFDM)**, Accumulated running hour, 3 fault records & limitation of auto-restart. Analog output **(i3M420/iFM420)**.
- **Communication : Modbus / RS-485**
- Reinforced monitoring function : Monitoring distance up to 400M, 3 phase current display, Pre-alarm **(i3DM/iFDM)** & Trip cause indication
- Bar graph indication of a load current to the current setting.
- Available application on single and 3 phase motor
- RoHS Compliance
- For **iFDM/iFMZ/iFMS/iFM420**, normal protections are guaranteed even if PDM is disconnected.

EOCR-i Series (with communication)

Basic model : EOCR-i3DM (Z, S, 420) / iFDM (Z, S, 420)

Protection functions

Protection item	Condition & Setting range	Operation time
Over current (oc)	Condition : Load current (In) exceeds setting current (Is) Setting range : 0.5~60A (Def), 0.5~32A (Inv & th)	Definite (Def) : 0.2~30s Adjust. Inverse (Inv) & Thermal (th) : 1~30 class
Under current (uc)	Condition : Load current (In) less than setting currentIn ≤ uc uc should be less than oc setting	oFF, 1~10s Adjustable
Phase loss (PL)	Condition : max imbalance is more than 85% among 3 phase current, Enable or disable : Selectable	oFF, 0.5~5s Adjustable
Reverse phase (RP)	Condition : Reversed phase sequence input on EOCR. Enable or disable : Selectable	Within 0.15s
Stall (Sc)	Condition : In ≥ Stall current setting (Sc). Active only in motor starting 0.5~30A : 2~8 times of oc setting ~40A : 2~6 times, ~60A : 2~4 times.	Right after D-time elapsed
Jam (JA)	Condition : In ≥ Jam current setting (JA). Active only in motor running 0.5~50A : 1.5~5 times of oc setting ~60A : 1.5~4 times of oc setting	0.2~5s Adjustable
Imbalance (IM)	Condition : Current imbalance ≥ Setting imbalance % Setting range : 10~50% of imbalance	1~10s Adjustable
Earth fault (EF)	Condition : EF current (Ie) exceeds setting current (Ies) OFF, 0.03~10A	0.05~5s Adjustable -- i3MZ/iFMZ only --
Short circuit (SH)	Condition : SC current (Is) exceeds setting current (Iss) 0.5~10A : 2~22 times of oc setting, ~20A : 2~11 times of oc setting	0.05sec -- i3MS/iFMS only --

Auxiliary functions

Password	For secured setting parameters
Communication	Monitoring currents and trip status by network
Phase selection	For single phase / three phase motor selection
TCC selection	Available three time-current-characteristics (Definite, Inverse, Thermal inverse)
CT ratio	For the current setting more than 60A (20A : i3MS/iFMS) and less than 0.5A
Fail safe selection	Fail safe operation for OL trip output
Pre alarm selection	Pre alarm signaling by the 07-08 output contact -- i3MS/iFDM only --
Total running hour	Total accumulated running hour from the installation which cannot be modified and reset.
Running hour	Display or provied a time-out signal to the 07-08 output contact. -- i3MS/iFDM only --
Reset mode	Manual / Auto / Electrical ; selectable
Trip cause memory	Store the latest 3 trip causes
Restart limitation	The maximum auto-restart number within 30 minutes in auto-reset mode.

EOCR-i Series (with communication)

Basic model : EOCR-i3DM (Z, S, 420) / iFDM (Z, S, 420)

Specifications

Model			i3DM / iFDM, i3MZ/iFMZ, i3MS/iFMS, i3M420/iFM420	
Over current		Rated setting range (A)	Definite TCC : 0.5~60A. : use external CT higher than 60A	
			i3MS/iFMS : 0.5~20A : use external CT higher than 20A	
			Inverse & th TCC : 0.5~32A. use external CT higher than32A	
Under current		Rated setting range (A)	0.5A ~ less than oc setting	
Operating time characteristics			Definite(Def) / Inverse(Inv) / Thermal(th)	
Time setting	Def	D-time	0~200s	
		O-time	0.2~30s	
	Inv & th (cLS)		1~30 classes	
	GF delay time (Edt)		0~30s (i3MZ/iFMZ)	
	GF O-time (Et)		0.05~10s (i3MZ/iFMZ)	
	SH delay time (SHd)		0~30s (i3MS/iFMS)	
	SH O-time		Within 0.05s fixed (i3MS/iFMS)	
	Auto-reset		0.5s~20min.	
	Reset mode		Manual reset (H-r) / Electric reset (E-r) / Auto-reset (A-r)	
Control power	Voltage		100~240VAC/DC(85% ~110%, Free voltage), 24VAC/DC(±5%)	
	Frequency		50/60Hz	
	Power consumption		Lower than 7VA	
Output	Capacity		3A/250VAC resistive.	
	Composition		1a1b : OC (i3DM/iFDM, i3MS/iFMS, i3M420/iFM420)	
			1a : GR (i3MZ/iFMZ), or AL (i3DM/iFDM), or SH (i3MS/iFMS)	
Display	7 Segment LED		3 phase amps, Cause of trip, Setting parameters indication.	
	Bar graph		Load factor.	
Communication			Modbus/ RS-485	
Mounting			Panel mounting (i3DM/i3MZ/i3MS/i3M420)	
			Flush mounting (iFDM/iFMZ/iFMS/iFM420)	
Insulation		Between case & Circuit	Over DC500V 10MΩ	
Dielectric strength		Between case & Circuit	2kV, 50/60Hz, I Min.	
		Between contacts	1kV, 50/60Hz, I Min.	
		Between circuit	2kV, 50/60Hz, 1 Min	
Electrostatic discharge (ESD)		IEC61000-4-2	Level 3 : Air discharge : ±8KV, Contact discharge : ±6KV	
Radiated disturbance		IEC61000-4-3	Level 3 : 10V/m, 80 ~ 1000MHz	
Conducted disturbance		IEC61000-4-6	Level 3 : 10V,0.15~80MHz	
EFT/Burst		IEC61000-4-4	Level 3 : ±2KV, 1 Min	
Surge		IEC61000-4-5	Level 3 : 1.2 x 50μs, ±4KV (0˚, 90˚, 180˚, 270˚)	
Emission		CISPR11	Class A (Conducted and radiated)	
Environment	**Temperature**	Store	-40˚C ~ +85˚C	
		Operation	20˚C ~ +60˚C	
	Humidity		30~85% RH (Non-condensate)	
Dimension		Window type	70W × 74.5H × 83.8D	
		Bottom hole type	70W × 56.3H × 108.1D	
Weight			**i3DM / i3MZ / i3MS / i3M420**	**iFDM / iFMZ / iFMS / iFM420**
		Window type	330g	420g
		Bottom hole type	370g	460g
		Terminal type	370 + 120(PDM) = 490g	460 + 120(PDM) = 580g
		Display (W/3M cable)	-	125g
Power consumption			Less than 7VA.	

EOCR-i Series (with communication)

Basic model : EOCR-i3DM (Z, S, 420) / iFDM (Z, S, 420)

Front face

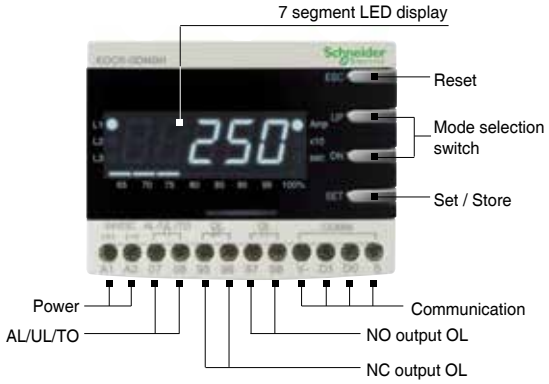

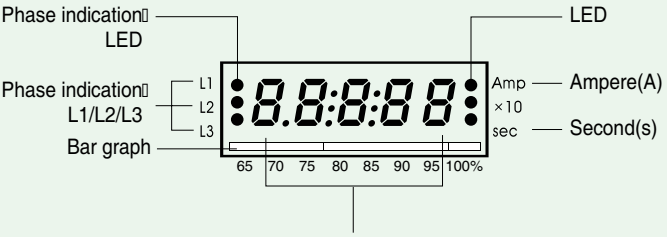

5 digit 7 segment LED display

3 phase load currents (In) and a leakage current **(i3MZ/iFMZ)** are displayed every 2 seconds in sequence.

Bar graph

- it shows the load factor to OC setting value by %
- % value = (running current/setting current) * 100%
- Min scale is 65%
- if the setting value is the rated motor current, it shows the load factor of the motor.

Current Display

- Shows the highest current among three phases for OC, Stall, Jam trips.
- Shows the lowest current among three phases for UC, UB
- Shows the lost phase for PL.
- Shows the phase and the current during running.

Amp : Ampere. LED is on when a current display.
x 10 : Shows the unit changed to 10 times.
Sec : Second. LED is on when a time display.

3 phase digital ammeter function

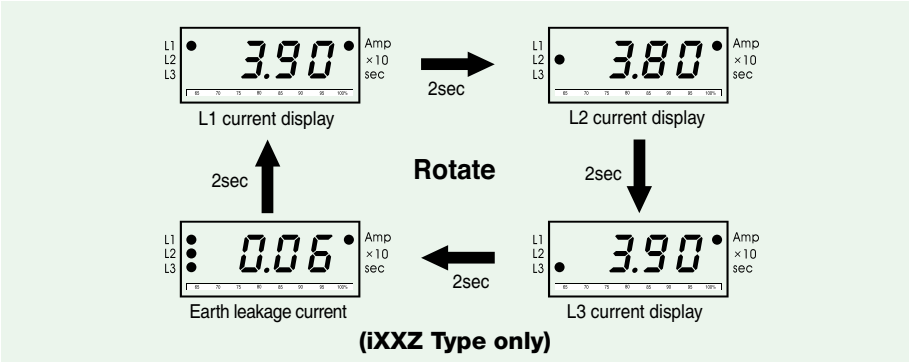

※ *Blocking display rotation can be done by pressing the SET button once during running. whenever press the SET button, the each phase current displays by turns. A fixed phase current display can be done by this.*

※ *Pressing the ESC button, it returns to the Auto current display rotation mode.*

Buttons and setting sequence

Button Display	Function
▲UP ▼DN	Press the UP or DN button to find the menu you want to set. For menus, see the descriptions on setting sequence and display.
SET	Press the SET button once to send a signal to the relay that notifies it that the setting process will begin. Then, the number or characters you want to set will start to flicker. This indicates that you can now change the setting.
▲UP ▼DN	Press the UP or DN button to find the number or characters you want to set.
SET	If the characters or number you want to set is displayed, press the SET button for the relay to save it. The character or number then stops flickering. This indicates that the setting has been saved.
ESC	Press the ESC button to return to the current display. If you do not press ESC button for over 50 seconds after the setting is made, it will automatically return to the current display.

※ *Fault History View: In Fault History View mode, you can check the fault history, from the most recent fault to the oldest fault. While checking the history, the most recent fault cause, fault current, and fault phase will be displayed. Every time you press the DN button, the values for L1, L2, L3, (earth fault current), L1-L2, L2-L3, L3-L1 will be displayed, in this order. To check the previous fault history, press the DN button again. While the fault history is being displayed, a bar graph will show the display info of the most recent fault only on the 100% LED. The display info of the next-most-recent fault will be displayed on the two LEDs of 95% and 100%, and for the third-most-recent fault info, all three LEDs of 90%, 95%, and 100% will show the fault info. If you press ESC briefly while viewing the fault history, it will switch to the circulation display of current and voltage. If you press the UP or DN button, among the LEDs of L1, L2, and L3 on the left side, the LED of the corresponding phase will display the fault current on the left side. For all other displays, the fault item info will be displayed as well. The history of up to 3 faults is saved, with the oldest history overwritten by a new fault when it occurs.*

• Setting sequence

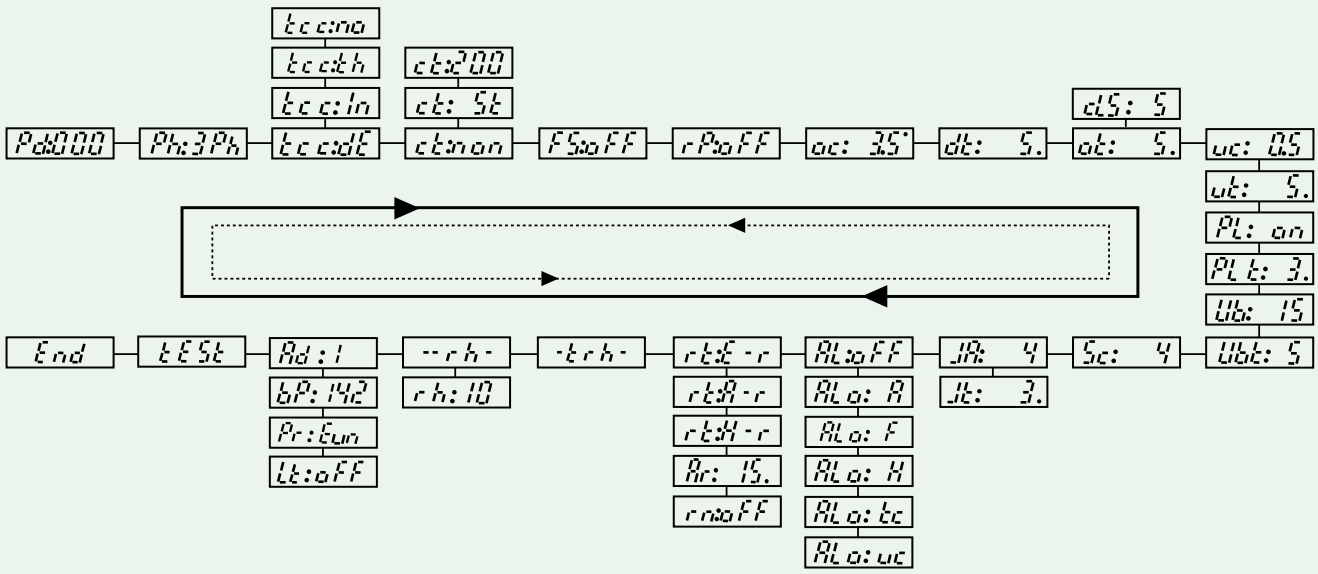

Setting sequence and menu

No.	Menu	Parameter	Description	Default
1	Password	Pd:000	Use password other than zero for secured settings. This feature enables limitation of setting modification by unauthorized person. Zero value is used for disabling password checking.	Pd:000
2	Selection of Phase No.	Ph: 3Ph Ph: 1Ph	“Ph:3Ph” mode for a 3 phase load, “Ph:1Ph” mode for a 1 phase load should be selected. If you select the “Ph:1Ph”, RP, PL and Ub functions will be disabled and not displayed in the menu mode	Ph: 3Ph
3	3 Operation curve	tcc:dE tcc:In tcc:th tcc:no	Time-current characteristic(TCC) setting. “dE” is for definite TCC, “In” is for inverse TCC, “th” is for thermal Inverse TCC. Refer to the time-current characteristic curve. If tcc=no, only overcurrent protection is disabled	tcc:dE
4	CT ratio	ct:non ct:200 ct: 2t ct:800 ct: 5t	External CT ratio setting mode. This is applied to definite TCC; higher than 60A and inverse TCC; higher than 32A. Set the primary value of the external CT. For example, 200:5 CT, setting is “ct:200”. For the low-range current “ct: 2t” is for 2 pass through, “ct: 5t” is for 5 pass through. Select “ct:non” in case of no externel CT and no loop.	ct:non
5	Frequency	Fr 60 Fr 50	Frequency setting mode. Select 50 or 60 based on the system fundamental frequency.	Fr 60
6	Fail safe	FS: on FS:oFF	Selection of fail safe(No volt release) mode for overload trip output, OL. Refer to fail-safe operation	FS:oFF
7	Reversed phase detection	rP: on rP:oFF	Enable or disable reverse phase detection	rP:oFF
8	Over current threshold	oc: 3.5	Threshold for over current protection . this value cannot be set below the under current threshold (uc).	oc: 5.0
9	Start delay time	dt: 5.	Motor starting delay, OC, UC, Stall, Jam, Ub are blocked during starting but PL, RP are not blocked. For “In” TCC mode, ,the cold curve is appled before dt expires and, the hot curve is applied after dt expires.	dt: 5.
10	Over current duration (Trip delay time / Trip class)	ot: 5.	(tcc:dE) ; the fault(over current) duration of definite overcurrent protection. (tcc:In) ; the trip class for inverse overcurrent protection(refer to TCC curve) (tcc:th) ; the thermal overload protection based on the thermal image by load current (refer to TCC curve).	ot: 5.
11	Under current threshold	uc: 0.5	Threshold for under current protection. The setting should be higher than no-load current of a motor. The current value cannot be set higher than OC.	uc:oFF
12	Under current duration (Trip delay time)	ut: 5.	Fault (under current) duration for the under current Operation. If the setting of “oFF” in the “uc” mode is selected, this menu is not displayed	ut: 5.
13	Earth fault (Ground fault) threshold	Ec:0.05	Threshold for earth fault protection. The capacitance leakage current of the motor and cable should be taken into account for the setting. The threshold value corresponds to the primary current of ZCT	Ec: 0.5
14	Earth fault trip delay time	Et:0.05	Earth fault duration (Trip delay time) TCC is definite characteristic	Et:1 .
15	EF starting delay	Edt: 6.	Blocking time of Earth Fault detection during motor starting. OFF, 1~30s adjustable This timer is only active during motor starting.	Edt: 0.
16	Short circuit current threshold	SH: 12	Threshold for short circuit detection. This value is the multiples of the over current threshold (oc). The SC fault duration is fixed to 0.05 second.	SH: 10

Setting sequence and menu

No.	Menu	Parameter	Description	Default
17	SC starting delay	SHd: 1.	Blocking time of short circuit detection during motor starting. This timer is only active during motor starting.	SHd: 0.
18	Phase loss	PL: on / PL:oFF	Enable or disable phase loss(Single phasing) detection. If the “Ph:1Ph” is selected, this menu is not displayed.	PL: on
19	Phase loss time	PLt: 3.	Fault duration for phase loss operation. The setting range is 0.5~5 sec. if “PL:oFF” is selected, this menu is not displayed	PLt: 3.
20	Imbalance threshold	Ub: 15	Threshold for current imbalance operation. To disable the function, set to “oFF”, the setting range is 10~50%. Imbalance factor (%) = ($I_{max\ phase}$ - I_{min_phase}) / I_{max_phase} x 100%	Ub: 15
21	Imbalance fault duration	Ubt: 5	Imbalance fault duration (trip delay time) for current imbalance operation. The setting range is 1~10 seconds.	Ubt: 5
22	Stall threshold	Sc: 4	Threshold for locked rotor detection during motor starting. The value is the multiples of the over current threshold(oc). If the locked rotor condition is detected, the trip relay operates in 0.5s after the “dt” expires. If dt=0, this function is disabled and not displayed in the menu. Setting range : oc=0.4~30A:2~8times, oc < 40A:2~6times, otherwise (oc<60A) : 2~4times, (with Ext. CT : 2~8times)	Sc: 4
23	Jam threshold	JA: 4	Threshold for locked rotor detection during motor running. The value is the multiples of the over current threshold (oc). Setting : oc=0.4~50A : 1.5~5times, otherwise (oc<60A) : 4times, (with Ext. CT : 15~5times)	JA: 4
24	Jam fault duration	Jt: 3.	Jam fault duration (trip delay time) Setting : 0.2~10 sec	Jt: 3.
25	420 Output range		Reference value for max analog output (20mA) If the load current is equal or greater than this value, analog output is fixed to 20mA	
26	Alert	rS: 5.0	Threshold of Alert output, set by % of the over current threshold (oc). If the load current is higher than this value, alert output(07-08 contact) is energized according to the setting of “ALo : XX”.	rS: 5.0
		AL: 05 / AL:oFF	If the load current is detected, alert output(07-08 contact) is energized. The alert threshold is no meaning for this operation. Refer to the alert operation pattern.	
		ALo: A	If the load current is higher than the alert threshold, alert output(07-08 contact) repeats open for 1s and close for 1s (flickering), The flickering starts from the motor starting. Refer to the alert operation pattern.	
		ALo: F	If the load current is higher than the alert threshold, alert output(07-08 contact) is closed (holding) and remains closed until the load current decrease under the alert threshold. The alert output is blocked during motor starting. Refer to the alert operation pattern.	
		ALo: H	If the accumulated running hour is more than the running hour threshold, the alert output repeats close for 1s and open for 1s.	
		ALo:Lo	The alert output is used only for under current protection. If this mode is selected, a trip by an under current fault is signaled through alert output (07-08), instead of overload trip output(95-96 or 97-98).	

Setting sequence and menu

No.	Menu	Parameter	Description	Default
27	Reset	rtE-r	Fault reset (Electrical reset) by a power cycle or by pressing the ESC button.	rtE-r
		rtH-r	Fault reset (Hand reset) by only pressing the ESC button.	
		rtA-r Ar: 15. Ar:20n	Fault reset (Auto Reset) by a auto-reset timer, Setting range of the timer : 0.5sec~20min. Also the fault can be reset by power cycle or by ESC button. The relay cannot be reset automatically when the relay is tripped by Phase Reversal(rP), Phase Loss(PL), Stalll(Sc) and Jam(JA)	rn:oFF
28	Restart limitation	rn: 3	The maximum auto-restart number during 30 minutes in auto-reset mode. The auto-restart counter (count) is stored in the non-volatile memory and is cleared by pressing ESC button when the counter(count) reaches the limitation. To disable limitation, select “oFF”. Setting range : oFF~5 times.	
29	Total running hour	-trh- 033 ⟺	In this menu, toggle display, “-trh-” and the accumulated (time) value, is activated (?) The accumulation starts from the installation and the user cannot clear the accumulated value. This display unit is 1 hour.	read only
30	Running hour	--rh- 43.3 ⟺	In this menu, toggle display, “--rh-” and the accumulated value, is activated (?) The user can clear the accumulated value by selecting the running hour threshold to “rh:oFF”. This display unit is 0.1 hour (6 minutes). By selecting “ALo:to”, the user can get the alert signal through alert output (07-08) when the accumulated value is more than the running hour threshold.	read only
31	Running hour threshold	rh: 10.	Threshold for alert output when the user selects “ALo:to”. The unit is 10 hours and this menu is not displayed when the motor is starting or running. Setting range : 10~9990 hours, oFF	
32	Communication	Ad:1	Modbus slave (ID) address. Range : 1 ~ 247.	Ad:1
		bP:19.2 bP:38.4	Setting for communication speed Range : 1.2kbps, 2.4Kbps, 4.8Kbps, 9.6Kbps,19.2Kbps, 38.4Kbps.	bP:19.2
		Pr:Eun Pr:non	Parity setting Range : odd, even, non.	Pr:Eun
		Lt:oFF Lt:999	Duration (communication. alarm trigger delay) for communication loss detection. Displays alarm when no new communication data is received for the duration. If “oFF” is selected, no monitoring for communication channel is activated. Setting range : 1~999 sec, oFF	Lt:oFF
33	Test trip	tESt	When this menu activated, OL trip signal and enabled short or EF trip signal is generated when (3s+ot) expires. The display shows “End” when the test is done. By pressing ESC, returns to the load current display mode. This menu is not displayed when the motor is starting or running. Before (3s+ot) expires, pressing ESC or motor starting or running blocks the test trip and return to the load current display. No parameter	No parameter
34	End	End	This shows the end of test trip. Test result is stored in the fault record.	No parameter

※ *#1 => These are applied to i3MZ & iFMZ only.*
#2 => These are applied to i3MS & iFMS only.
#3 => This is applied to i3M420 & iFM420 only.
#4 => This is applied to i3DM & iFDM only.

※ *Menusfrom password to reversed phase detection are not displayed during the motor running.*

EOCR-i Series (with communication)

Basic model : EOCR-i3DM (Z, S, 420) / iFDM (Z, S, 420)

Alert operation pattern (i3DM & iFDM only)

ALo Selection \ Running Stage	Starting	Norma Operation	Higher than the preset Alert value	Trip
Aux (ALo: A)				
Flicker (ALo: F)				
Hold (ALo: H)				

- ALo "A" : Ampere relay function (The 07-08 output contact is closed when a current is detected)
- ALo "F" : Flickering (When a current flows, the output contact is closed and repeating the close and open on it in a higher current than the AL setting.)
- ALo "H" : Holding (The output contact is closed in a higher current than the AL setting).
- ALo "uc" : Applied to "uc" (under current protection) output contact.
- ALo "to" : When a running hour time is elapsed over the "rh" set value, the output contact repeats the close - open.

Fail-safe operation

Fail-Safe	A1-A2 not powered	A1-A2 powered and under normal operation	A1-A2 powered and Tripped
ON	95 96 Close 97 98 Open	95 96 Open 97 98 Close	95 96 Close 97 98 Open
OFF	95 96 Close 97 98 Open	95 96 Close 97 98 Open	95 96 Open 97 98 Close

Trip cause indication and fault records

3 fault records including the trip cause and 3phase currents are stored in a non-volatile memory.
When the motor is running or stopped, trip cause can be navigated by pressing ESC button over 5seconds

Trip indication					
Trip			Indication after trip with UP/ DN button pressing		
Trip cause	Indication	Contents of indication	L1 LED on	L2 LED on	L3 LED on
Over current	oc: 36	OC Trip caused by r(L1)-phase current	36	34	34
Phase loss	PL -r	Phase Loss caused by r(L1)-phase lost	00	55	55
Reversed phase	-rP-	Phase reversal trip	34	34	34
Stall	Sc: 350	Stall trip during motor starting caused by s(L2)-phase curren	340	350	340
Jam	JA: 150	Jam trip during motor running caused by t(L3)-phase current	150	150	150
Imbalance	UB: 42	Imbalance trip caused by t(L3)-phase current	58	58	42
Under current	uc: 16	Under current trip caused by s(L2)-phase current	22	16	22
Earth fault (i3MZ/iFMZ)	EF:005	Earth fault(Earth leakage) trip with Earth fault current indication	35	34	34
Short circuit (i3MS/iFMS)	SH:120	Short Circuit trip caused by s(L2)-phase current	120	120	120
Limitation of auto-restart	rn:FuL	In 30minutes, the number of auto-restar by auto-reset exceeds the setting	For emergency restart, manual reset by pressing ESC clears the restart counter to zero.		

Time-current characteristic curve

Inverse characteristic

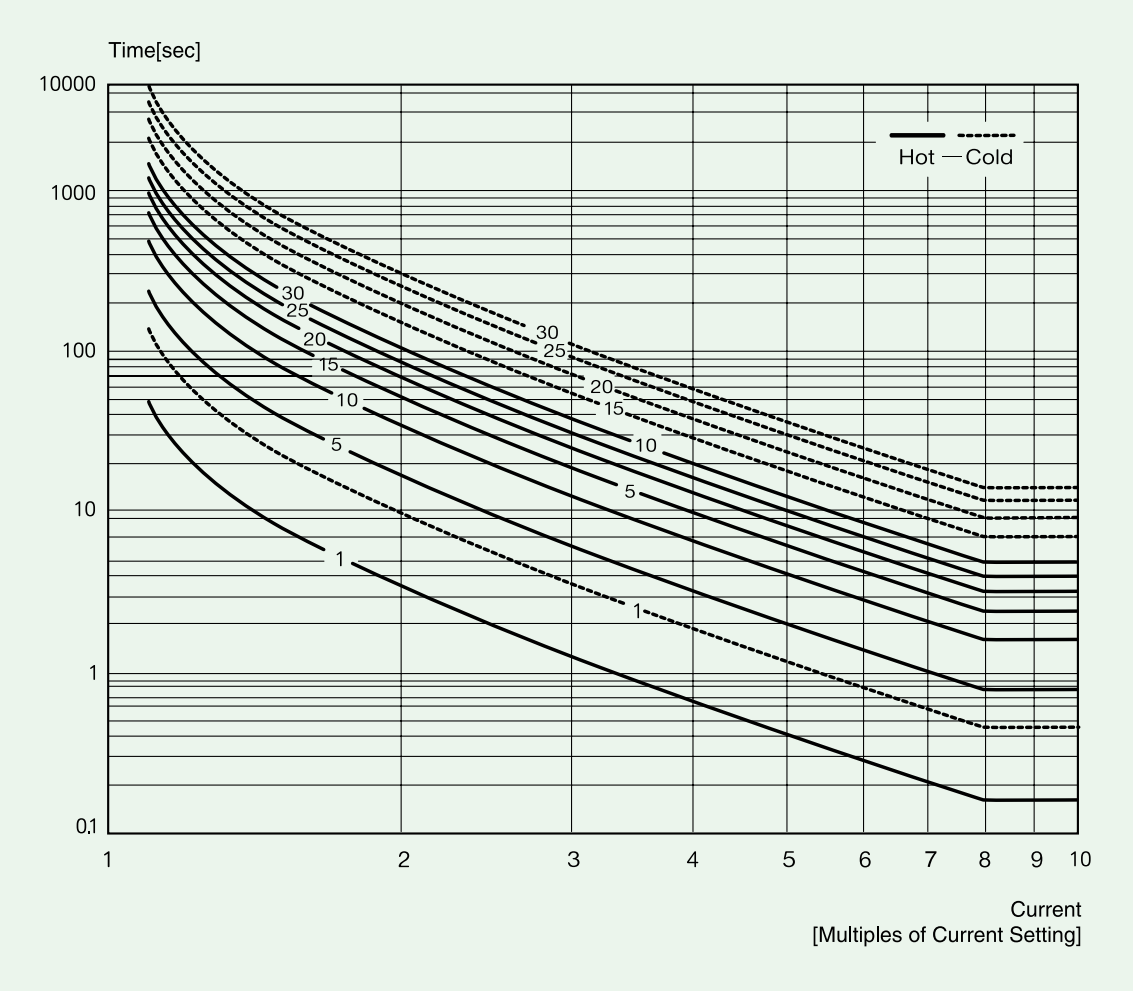

Definite characteristic

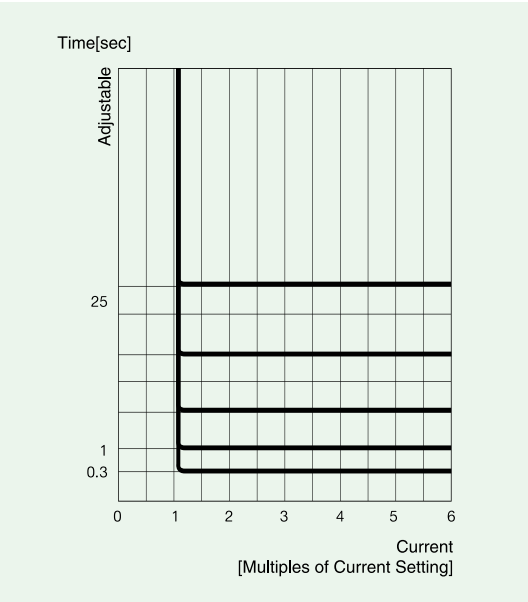

Thermal inverse characteristic

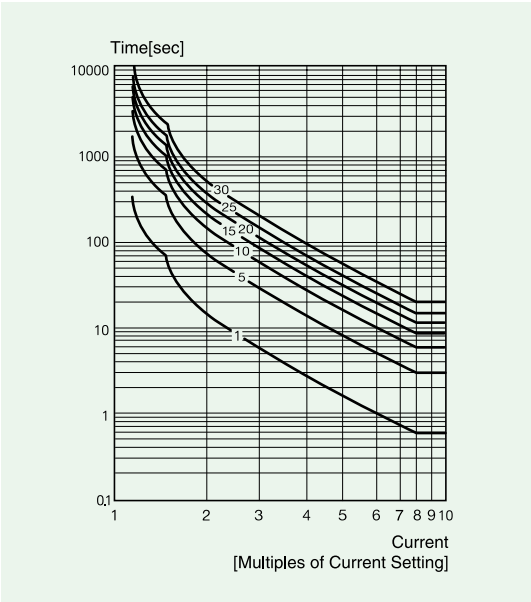

EOCR-i Series (with communication)

Basic model : EOCR-i3DM (Z, S, 420) / iFDM (Z, S, 420)

Current setting range

Setting range	Number of pass through the CT hole	External CT ratio	CT setting	Remark
0.5 ~ 60A	1	No CT combination	ct:non	
0.25 ~ 3A	2	No CT combination	ct: 2t	
0.1 ~ 1.2A	5	No CT combination	ct: 5t	
0.5 ~ 32A	1	No CT combination	ct:non	Inverse TCC or thermal Inverse TCC
0.5 ~ 60A	1	No CT combination	ct:non	Definite TCC
10 ~100A	1	100 : 5	ct:100	Definite or inverse (th)
20 ~200A	1	200 : 5	ct:200	Definite or inverse (th)
30 ~ 300A	1	300 : 5	ct:300	Definite or inverse (th)
40 ~ 400A	1	400 : 5	ct:400	Definite or inverse (th)
50 ~ 500A	1	500 : 5	ct:500	Definite or inverse (th)
60 ~ 600A	1	600 : 5	ct:600	Definite or inverse (th)
70 ~ 700A	1	700 : 5	ct:700	Definite or inverse (th)
80 ~ 800A	1	800 : 5	ct:800	Definite or inverse (th)

Typical wiring schematic

Typical wiring for EOCR-i3DM / iFDM (3 phase motor - window type)

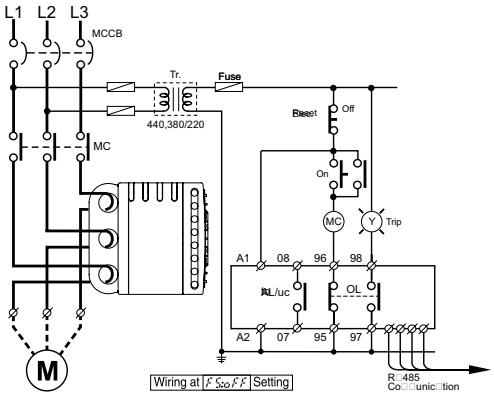

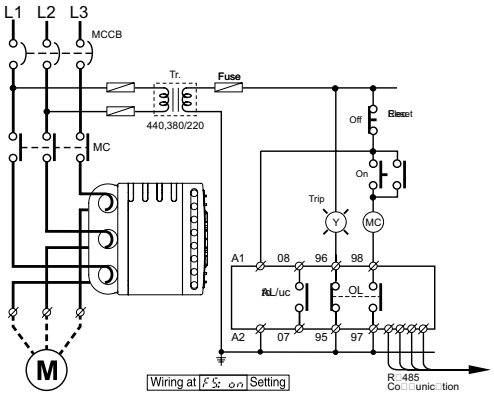

Bottomhole type

Single phase motor (window type)

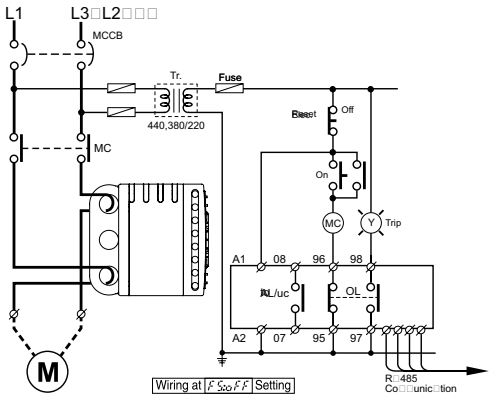

Single phase motor (window type)

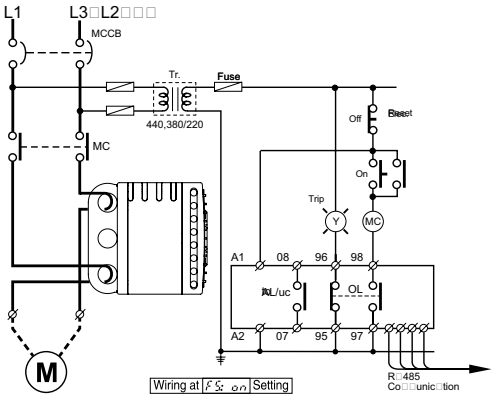

Bottomhole type

EOCR-i Series (with communication)

Basic model : EOCR-i3DM (Z, S, 420) / iFDM (Z, S, 420)

Typical wiring schematic

Typical wiring for EOCR-i3MZ / iFMZ

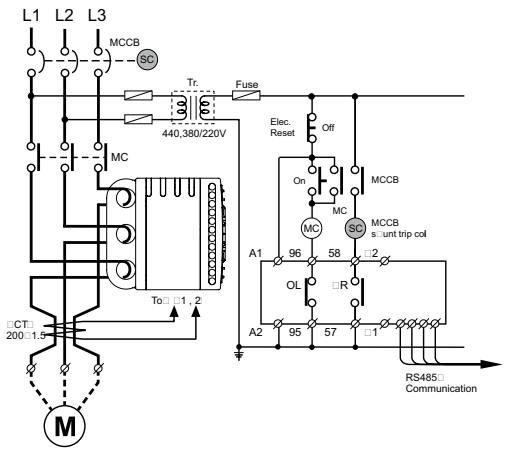

Typical wiring for EOCR-i3MS / iFMS

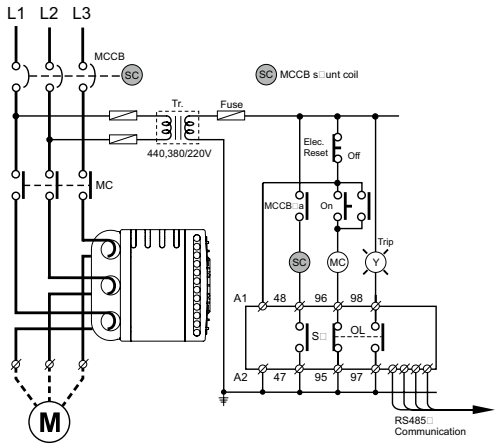

Typical wiring for EOCR-i3M420 / iFM420

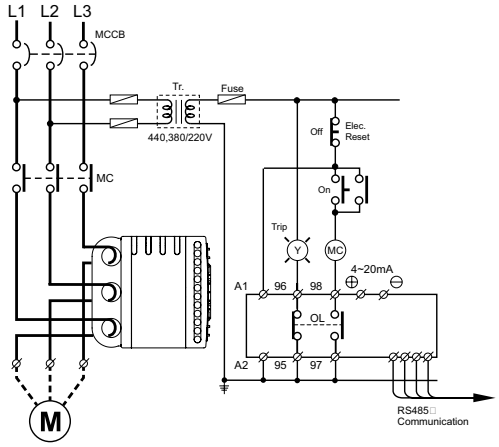

Cabling for a three phase motor

Cabling for a single phase motor

EOCR-i Series (with communication)

Basic model : EOCR-i3DM (Z, S, 420) / iFDM (Z, S, 420)

Control terminals

EOCR-i3DM/iFDM

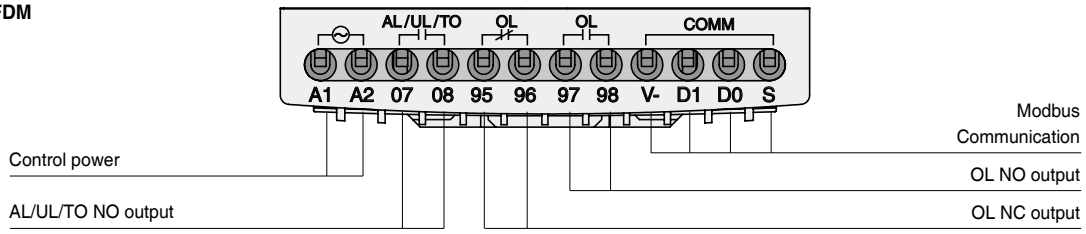

EOCR-i3MZ/iFMZ ("A" type)

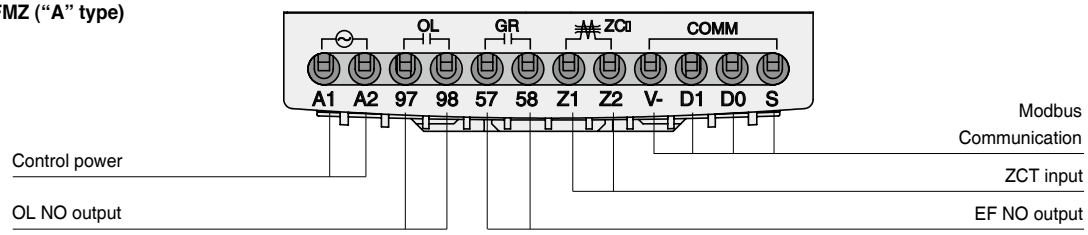

EOCR-i3MZ/iFMZ ("C" type)

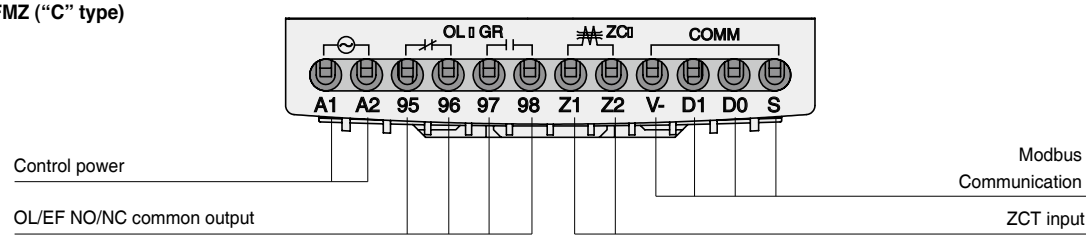

EOCR-i3MZ/iFMZ ("D" type)

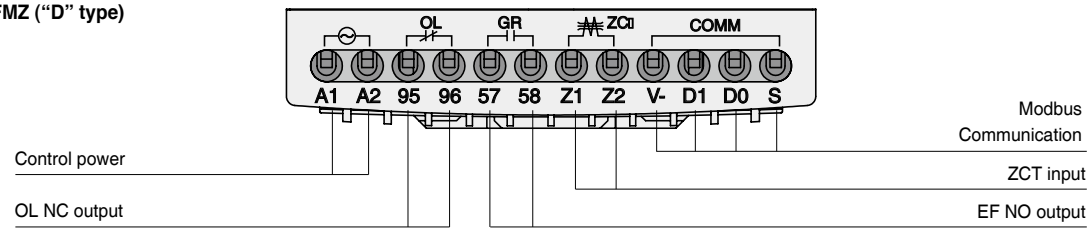

EOCR-i3M420/iFM420

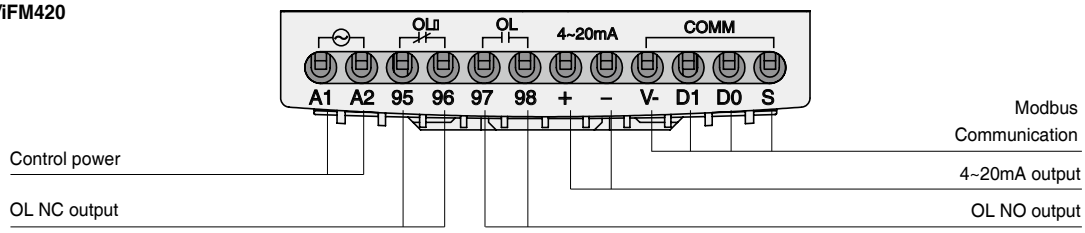

EOCR-i3MS/iFMS

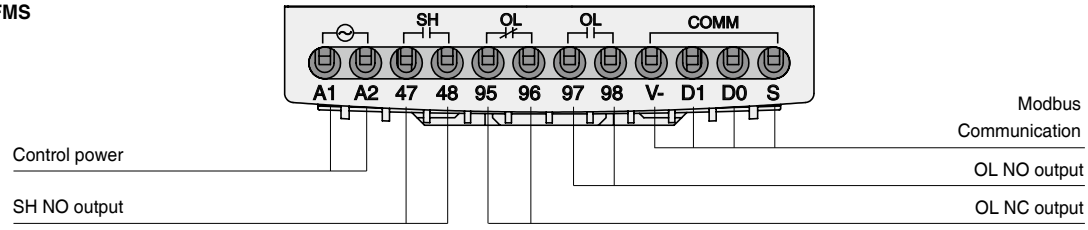

EOCR-i Series (with communication)

Basic model : EOCR-i3DM (Z, S, 420) / iFDM (Z, S, 420)

Dimension of i3XX

Window type

EOCR-i3DM EOCR-i3M420
EOCR-i3MZ EOCR-i3MS

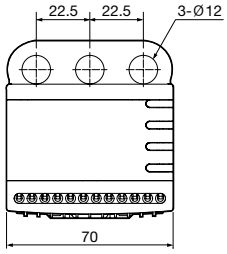

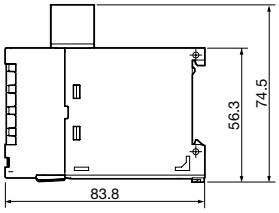

PANEL & DIN RAIL TYPE

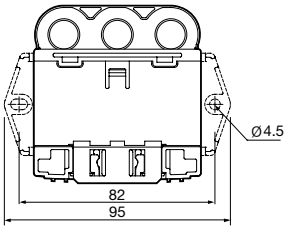

MOUNTING HOLE SIZE

Bottom hole type

EOCR-i3DM EOCR-i3M420
EOCR-i3MZ EOCR-i3MS

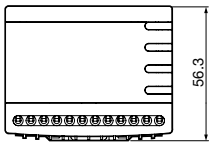

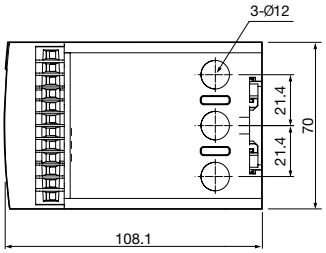

PANEL & DIN RAIL TYPE

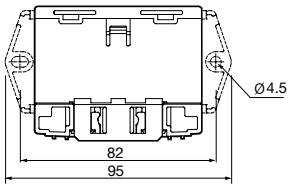

MOUNTING HOLE SIZE

Terminal type

EOCR-i3DM EOCR-i3M420
EOCR-i3MZ EOCR-i3MS

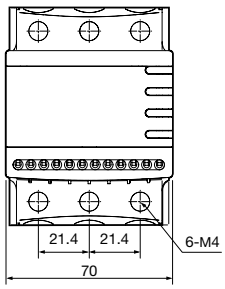

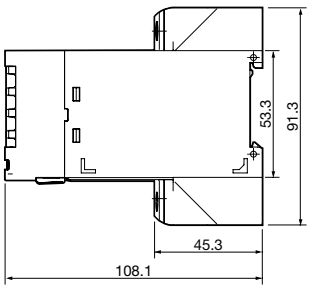

PANEL & DIN RAIL TYPE

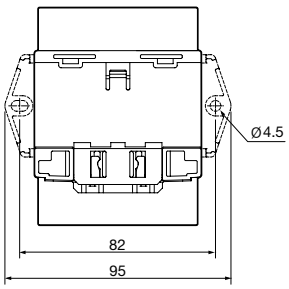

MOUNTING HOLE SIZE

EOCR-i Series (with communication)

Basic model : EOCR-i3DM (Z, S, 420) / iFDM (Z, S, 420)

Dimension of iFXX

Window type
EOCR-iFDM EOCR-iFM420
EOCR-iFMZ EOCR-iFMS

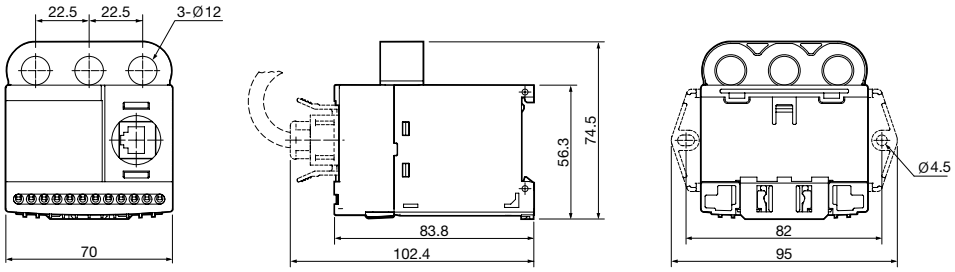

PANEL & DIN RAIL TYPE MOUNTING HOLE SIZE

Bottom hole type
EOCR-iFDM EOCR-iFM420
EOCR-iFMZ EOCR-iFMS

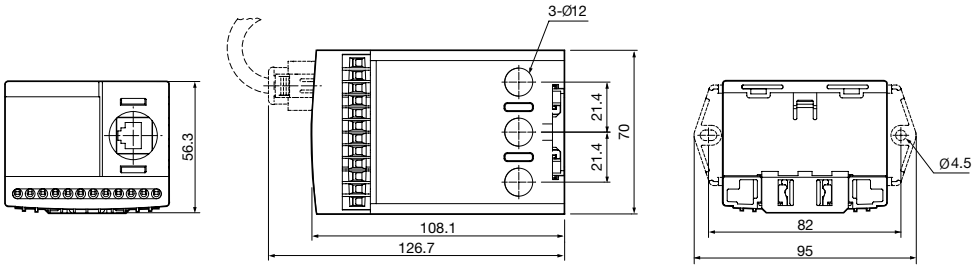

PANEL & DIN RAIL TYPE MOUNTING HOLE SIZE

Terminal type
EOCR-iFDM EOCR-iFM420
EOCR-iFMZ EOCR-iFMS

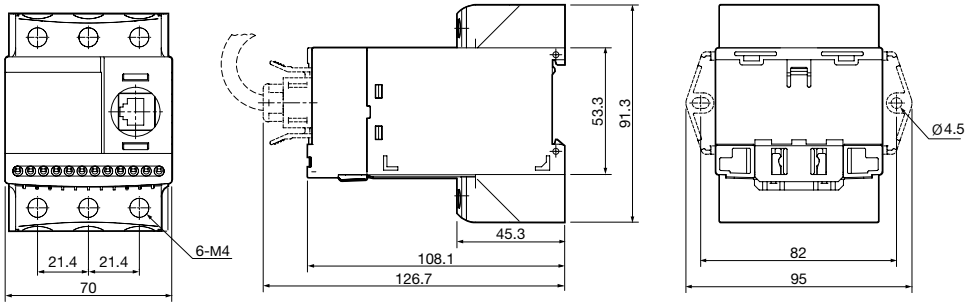

PANEL & DIN RAIL TYPE MOUNTING HOLE SIZE

Display
EOCR-PDM

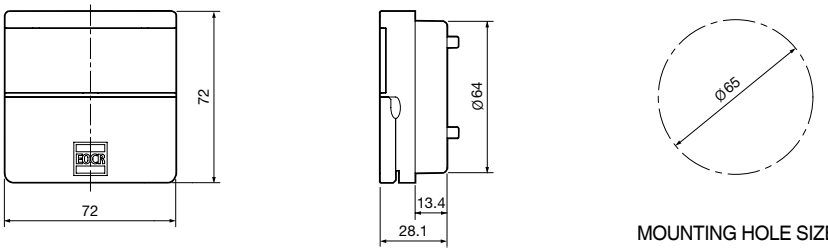

MOUNTING HOLE SIZE

EOCR-i Series (with communication)

Basic model : EOCR-i3DM (Z, S, 420) / iFDM (Z, S, 420)

Ordering

EOCR-i3XX

Window CT

Bottom CT

Terminal

External CT combination type

i3DM - WR D U W Q

❶ ❷ ❸ ❹ ❺ ❻

❶	Model name	i3DM		Basic model
		i3MZ		GF model
		i3M420		4~20mA output model
		i3MS		SC model
❷	Current Range	WR		0.5~60A
				0.5~20A (i3MS)
		H1		100:5 3CT combination type
		HH		150:5 3CT combination type
		H2		200:5 3CT combination type
		H3		300:5 3CT combination type
		H4		400:5 3CT combination type
❸	Output contact type	i3MZ	A	a(97-98) :OC, a(57-58) : GR
			C	b(95-96), a(97-98) : OC.GR common
			D	b(95-96) :OC, a(57-58) : GR
		D		b(95-96), a(97-98)
❹	Control voltage	B		24VAC/DC
		U		100~240VAC/DC
❺	CT type	W		Window type
		H		Bottom hole type
		T		Terminal type
❻	Export code	Q		

EOCR-iFXX

Window CT

Bottom CT

Terminal

External CT combination type

iFDM - WR D U W Q

❶ ❷ ❸ ❹ ❺ ❻

❶	Model name	i3DM		Basic model
		i3MZ		GF model
		i3M420		4~20mA output model
		i3MS		SC model
❷	Current Range	WR		0.5~60A
				0.5~20A (iFMS)
		H1		100:5 3CT combination type
		HH		150:5 3CT combination type
		H2		200:5 3CT combination type
		H3		300:5 3CT combination type
		H4		400:5 3CT combination type
❸	Output contact type	i3MZ	A	a(97-98) :OC, a(57-58) : GR
			C	b(95-96), a(97-98) : OC.GR common
			D	b(95-96) :OC, a(57-58) : GR
		D		b(95-96), a(97-98)
❹	Control voltage	B		24VAC/DC
		U		100~240VAC/DC
❺	CT type	W		Window type
		H		Bottom hole type
		T		Terminal type
❻	Export code	Q		

EOCR-i Series (with communication)

Basic model : EOCR-i3DM (Z, S, 420) / iFDM (Z, S, 420)

Ordering

Display

EOCR-PDMQ

Cable connector

CABLE - RJ45 - 001

❶ ❷

❶	Connector type	RJ45	
❷	Cable length	00H	0.5 m
		001	1 m
		01H	1.5 m
		002	2 m
		003	3 m
		Others	Custom made

Square 3 CT

3CT - H1 - 100 - C

❶

❶	CT ratio	H1-100-C	Square 3CT 100:5
		HH-150-C	Square 3CT 150:5
		H2-200-C	Square 3CT 200:5
		H3-300-C	Square 3CT 300:5
		H4-400-C	Square 3CT 400:5

SR-CT

SR-3CT - 100

❶

❶	CT ratio	S1	100	100:5
		SH	150	150:5
		S2	200	200:5
		S3	300	300:5
		S4	400	400:5

ZCT

ZCT - 035

❶

❶	Inner-diameter	035	35mm
		080	80mm
		120	120mm

EOCR-DM2 Series

Basic model : EOCR-3DM2 (Z) / FDM2 (Z)

EOCR-3DM2 Window type

EOCR-3DM2 Bottom hole type

EOCR-FDM2 Window type

EOCR-FDM2 Bottom hole type

EOCR-3DM2 Terminal type

EOCR-FDM2 Terminal type

General features

- Micro-controller unit based
- Real time processing / High precision
- Protections : Over current, Under current, Phase loss, Phase reversal, Stall, Jam, Current Imbalance, Earth fault **(3MZ2/FMZ2)**
- Inverse available up to 32Amps without external CTs.
- Ancillary functions : Fail safe, Pre-alarm **(3DM2/FDM2)**, Accumulated running hour, 3 faults records & limitation of auto-restart.
- Reinforced monitoring function : Monitoring distance up to 400M, 3 phase current display,
  Pre-alarm **(3DM2/FDM2)** & Trip cause indication
- Bar graph indication of a load current to the current setting.
- Available application on single and 3 phase motor
- RoHS Compliance
- For **FDM2/FMZ2**, normal protections are guaranteed even if PDM is disconnected.

EOCR-DM2 Series

Basic model : EOCR-3DM2 (Z) / FDM2 (Z)

Protection functions

Protection item	Condition & Setting range	Operation time
Over current (oc)	Condition : Load current (In) exceeds setting current (Is) Setting range : 0.5~60A (Def), 0.5~32A (Inv)	Definite (Def) : 0.2~30s adjust. Inverse (Inv) : 1~30 class
Under current (uc)	Condition : Load current (In) less than setting currentIn ≤ uc uc should be less than oc setting	oFF, 1~10s adjustable
Phase loss (PL)	Condition : max imbalance is more than 85% among 3 phase current, Enable or disable : Selectable	oFF, 0.5~5s adjustable
Reverse phase (RP)	Condition : Reversed phase sequence input on EOCR. Enable or disable : Selectable	Within 0.15s
Stall (Sc)	Condition : In ≥ Stall current setting (Sc). Active only in motor starting 0.5~30A : 2~8 times of oc setting ~40A : 2~6 times, ~60A : 2~4 times.	Right after D-time elapsed
Jam (JA)	Condition : In ≥ Jam current setting (JA). Active only in motor running 0.5~50A : 1.5~5 times of oc setting ~60A : 1.5~4 times of oc setting	0.3~5s adjustable
Imbalance (IM)	Condition : Current imbalance ≥ Setting imbalance % Setting range : 10~50% of imbalance	1~10s adjustable
Earth fault (EF)	Condition : EF current (Ie) exceeds setting current (Ies) OFF, 0.03~10A	0.05~5s adjustable -- 3MZ2/FMZ2 only --

Ancillary functions

Password selection	For secured setting parameters.
Phase selection	For single phase / three phase motor selection
TCC selection	Available three time-current-characteristics (Definite, Inverse, Thermal inverse)
CT ratio	For the current setting more than 60A (20A : i3MS/iFMS) and less than 0.5A
Fail safe selection	Fail safe operation for OL trip output.
Pre alarm selection	Pre alarm signaling by the 07-08 output contact
Total running hour	Total accumulated running hour from the installation which cannot be modified and reset.
Running hour	Display or provide a time-out signal to the 07-08 output contact. (i3DM/iFDM)
Reset mode	Manual / Auto / Electrical ; Selectable
Trip cause memory	Store the latest 3 trip causes
Restart limitation	The maximum auto-restart number within 30 minutes in auto-reset mode.

EOCR-DM2 Series

Basic model : EOCR-3DM2 (Z) / FDM2 (Z)

Specifications

Model			3DM2 / FDM2, 3MZ2 / FMZ2	
Over current		Rated setting range (A)	Definite TCC : 0.5~60A : use external CT higher than 60A	
			Inverse TCC : 0.5~60A : use external CT higher than 32A	
Under current		Rated setting range (A)	0.5A ~ less than oc setting	
Operating time characteristics			Definite(Def) / Inverse(Inv)	
Time setting	Def	D-time	0~200s	
		O-time	0.2~30s	
	Inv & th (cLS)		1~30 classes	
	GF delay time (Edt)		0~30s (3MZ2/FMZ2)	
	GF O-time (Et)		0.05~10s (3MZ2/FMZ2)	
	Auto-reset		0.5s~20min.	
	Reset mode		Manual reset (H-r) / Electric reset (E-r) / Auto-reset (A-r)	
Control power	Voltage		100~240VAC/DC (85% ~110%, Free voltage), 24VAC/DC (±5%) .	
	Frequency		50/60Hz	
	Power consumption		Lower than 7VA	
Output	Capacity		3A/250VAC resistive.	
	Composition		1a1b : OC or GR	
			1a : AL	
Display	7 Segment LED		3 phase amps, Cause of trip, Setting parameters indication.	
	Bar graph		Load factor.	
Mounting			Panel mounting (3DM2/3MZ2)	
			Flush mounting (FDM2/FMZ2)	
Insulation		Between case & Circuit	Over DC500V 10MΩ	
Dielectric strength		Between case & Circuit	2kV, 50/60Hz, I Min.	
		Between contacts	1kV, 50/60Hz, I Min.	
		Between circuit	2kV, 50/60Hz, 1 Min	
Electrostatic discharge (ESD)		IEC61000-4-2	Level 3 : Air discharge : ±8kV, Contact discharge : ±6kV	
Radiated disturbance		IEC61000-4-3	Level 3 : 10V/m, 80 ~ 1000MHz	
Conducted disturbance		IEC61000-4-6	Level 3 : 10V,0.15 ~ 80MHz	
EFT/Burst		IEC61000-4-4	Level 3 : ±2kV, 1 Min.	
Surge		IEC61000-4-5	Level 3 : 1.2 x 50μs, ±4kV (0°, 90°, 180°, 270°)	
Emission		CISPR11	Class A (Conducted and radiated)	
Environment	**Temperature**	Store	-40°C ~ +85°C	
		Operation	-20°C ~ +60°C	
	Humidity		30~85% RH (Non-condensate)	
Dimension		Window type	70W × 74.5H × 83.8D	
		Bottom hole type	70W × 56.3H × 108.1D	
Weight			**3DM2 / 3MZ2**	**FDM2 / FMZ2**
		Window type	265g	350g
		Bottom hole type	295g	390g
		Terminal type	295 + 120 = 415g	390 + 120 = 510g
		Display (W/3M cable)		125g
Power consumption			Less than 7VA.	

Front face

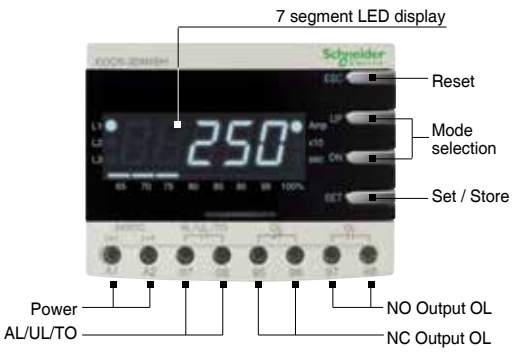

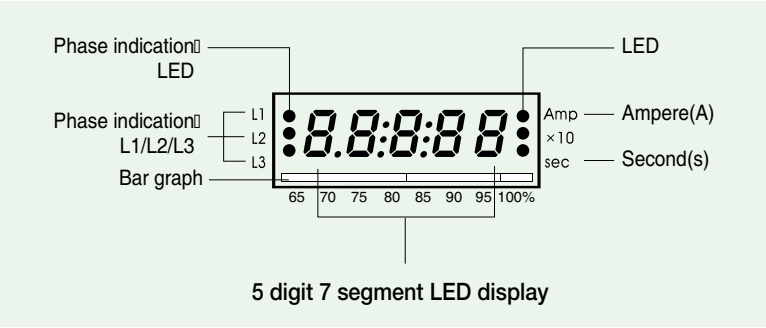

3 phase currents (In) and a leakage current **(3MZ2/FMZ2)** are displayed every 2 seconds in sequence.

Bar graph

- it shows the load factor to OC setting value by %
- % value = (running current/setting current) * 100%
- Min scale is 65%
- if the setting value is the rated motor current, it shows the load factor of the motor.

Current display

- Shows the highest current among three phases for OC, Stall, Jam trips.
- Shows the lowest current among three phases for UC, UB
- Shows the lost phase for PL.
- Shows the phase and the current during running.

Amp : Ampere. LED is on when a current display.
x 10 : Shows the unit changed to 10 times.
Sec : Second. LED is on when a time display.

3 phase digital ammeter function

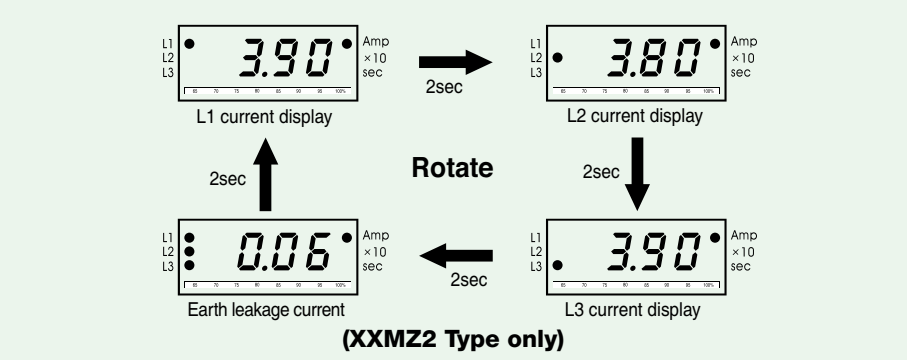

※ *Blocking display rotation can be done by pressing the SET button once during running. whenever press the SET button, the each phase current displays by turns. A fixed phase current display can be done by this.*

※ *Pressing the ESC button, it returns to the Auto current display rotation mode.*

Buttons and Setting Sequence

Button	Description
▲UP ▼DN	Navigate menus by pressing UP/DN button.
SET	Select a parameter to change, then the parameter starts blinking.
▲UP ▼DN	Modify a parameter value by pressing UP/DN button.
SET	Memorize the values in the relay by pressing SET button. blinking stops to show it's stored.
ESC	Pressing ESC button, it returns to the current display. Without pressing ESC button, it returns to the load current display in 50sec automatically.

※ *Fault history check : Pressing the ESC button more than 5sec, it displays the latest fault cause and the fault current or fault phase. Continuing to press DN button, you can see the current of L1(R), L2(S), L3(T), (GR) in turn. press the DN button again to check the previous fault continually. In the latest fault display, the 100% LED of bar graph lights on and two LEDs of 95%, 100% lights on for the second fault display, three LEDs of 90%, 95%, 100% lights on for the oldest fault display. When you press the ECS button in this mode, it returns to the normal current display mode. The oldest fault record is over written when the number of fault to record exceeds three.*

• Setting sequence

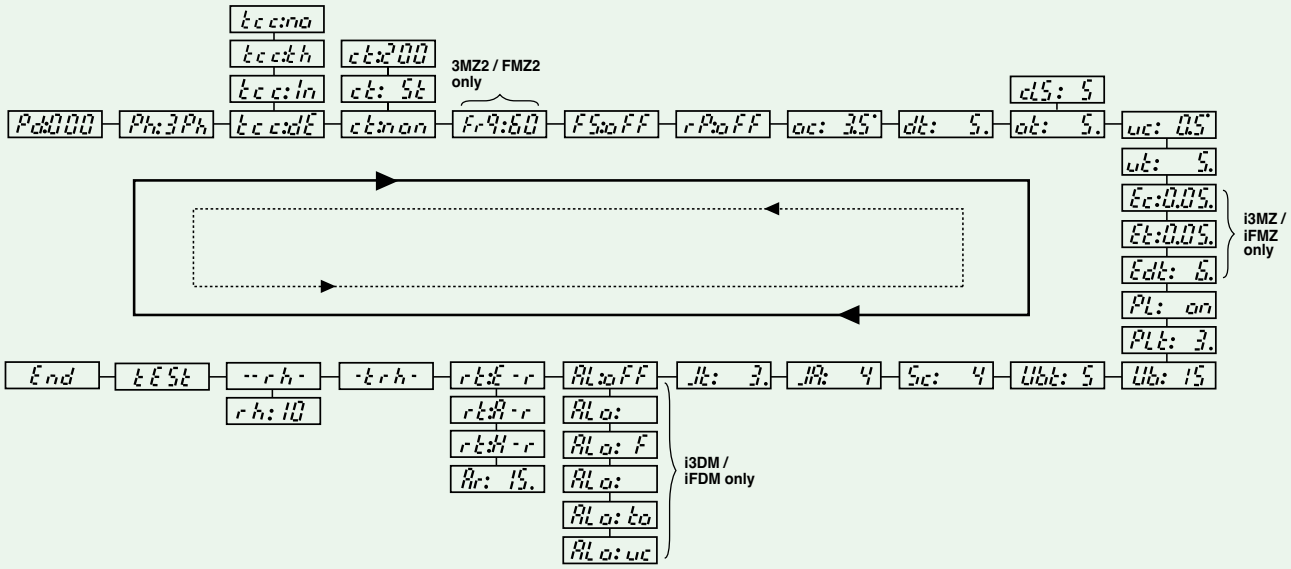

Setting sequence and menu

No.	Menu	Parameter	Description	Default
1	Selection of phase No.	Ph: 3Ph / Ph: 1Ph	"Ph:3Ph" mode for a 3 phase load, "Ph:1Ph" mode for a 1 phase load should be selected. If you select the "Ph:1Ph", RP, PL and Ub functions will be disabled and not displayed in the menu mode	Ph: 3Ph
2	Operation curve	tcc:dE / tcc:In / tcc:no	Time-current characteristic(TCC) setting. "dE" is for definite TCC, "In" is for inverse TCC, "th" is for thermal inverse TCC. Refer to the time-current characteristic curve. If tcc=no, only overcurrent protection is disabled	tcc:dE
3	CT ratio	ct:non / ct:200 / ct: 2t / ct:800 / ct: 5t	External CT ratio setting mode. This is applied to definite TCC: higher than 60A and Inverse TCC: higher than 30A. Set the primary value of the external CT. For example, 200:5 CT, setting is "ct:200". For the low-range current "ct: 2t" is for (2 loops), "ct: 5t" is for (5 loops). Select "ct: non" in case of no external CT and single loop.	ct:non
4 #1	Frequency	Fr 60 / Fr 50	Frequency setting mode. Select 50 or 60 based on the system fundamental frequency.	Fr 60
5	Fail safe	FS: on / FS:oFF	Selection of fail safe(No volt release) mode for overload trip output, OL. Refer to fail-safe operation	FS:oFF
6	Reversed phase detection	rP: on / rP:oFF	Enable or disable reverse phase detection	rP:oFF
7	Over current threshold	oc: 3.5	Threshold for over current protection. this value cannot be set below a under current threshold (uc).	oc: 3.5
8	Start delay time	dt: 5.	Motor starting delay, OC, UC, Stall, Jam, Ub are blocked during starting but PL, RP are not blocked. For "In" TCC mode, the cold curve is appled before dt expires and, the hot curve is applied after the dt expires.	dt: 5.
9	Over current duration (Trip delay time / Trip class)	ot: 5.	(tcc:dE) : the fault(over current) duration of definite overcurrent protection. (tcc:In) : the trip class for inverse overcurrent protection (refer to TCC curve) (tcc:th) : the thermal overload protection based on the thermal image by load current (refer to TCC curve).	ot: 5.
10	Under current threshold	uc: 0.5	Threshold for under current protection. The setting should be higher than noload current of a motor. The current value cannot be set higher than OC.	uc: 0.5
11	Under current duration (Trip delay time)	ut: 5.	Fault (under current) duration for the under current operation. If the setting of "oFF" in the "uc" mode is selected, this menu is not displayed	ut: 5.
12 #1	Earth fault (Ground fault) threshold	Ec:0.05	Threshold for earth fault protection. The capacitance leakage current of the motor and cable should be taken into account for the setting. The threshold value corresponds to the primary current of ZCT	Ec: 0.5
13 #1	Earth fault trip delay time	Et:0.05	Earth fault duration (Trip delay time) TCC is definite characteristic	Et:1 .
14 #1	EF starting delay	Edt: 6.	Blocking time of earth fault detection during motor starting. OFF, 1~30s adjustable this timer is only active during motor starting.	Edt: 0.
15	Phase loss	PL: on / PL:oFF	Enable or disable Phase Loss(Single Phasing) detection. If the "Ph:1Ph" is selected , this menu is not displayed.	PL: on
16	Phase loss time	PLt: 3.	Fault duration for phase loss operation. The setting range is 0.5~5 sec. if "PL: oFF" is selected, this menu is not displayed.	PLt: 3.
17	Imbalance threshold	Ub: 15	Threshold for current imbalance operation. To disable the function, set to "oFF", the setting range is 10~50%. Imbalance factor (%) = ($I_{max\ phase}$ - I_{min_phase}) / I_{max_phase} x 100% Imbalance fault duration (trip delay time) for current imbalance operation. The setting range is 1~10 seconds.	Ub: 15
18	Imbalance fault duration	Ubt: 5	Threshold for locked rotor detection during motor starting. The value is the multiples of the over current threshold(oc). If the locked rotor condition is detected, the trip relay operates in 0.5s after the "dt" expires. If dt=0, this function is disabled and not displayed in the menu.	Ubt: 5
19	Stall threshold	Sc: 4	Setting range : oc=0.4~30A : 2~8times, oc < 40A : 2~6times, otherwise (oc<60A) : 2~4times, (with Ext. CT : ?)	Sc: 4
20	Jam threshold	JA: 4	Threshold for locked rotor detection during motor running. The value is the multiples of the over current threshold (oc). Setting : oc=0.4~50A : 1.5~5times, otherwise (oc<60A) : 4times, (with Ext. CT : ?)	JA: 4

Setting sequence and menu

No.	Menu	Parameter	Description	Default
21	Jam fault duration	Jt: 3.	Jam fault duration (trip delay time) Setting : 0.2~10 sec	Jt: 3.
22 #2	Alert	AL: 85 / ALoFF	Threshold of alert output, set by % of the over current threshold (oc). If the load current is higher than this value, alert output(07-08 contact) is energized according to the setting of "ALo:XX".	ALoFF
		ALo: A	If the load current is detected, alert output(07-08 contact) is energized. The alert threshold is no meaning for this operation. Refer to the alert operation pattern.	
		ALo: F	If the load current is higher than the alert threshold, alert output(07-08 contact) repeats open for 1s and close for 1s (flickering), The flickering starts from the motor starting. Refer to the alert operation pattern.	
		ALo: H	If the load current is higher than the alert threshold, alert output(07-08 contact) is closed (holding) and remains closed until the load current decrease under the alert threshold. The alert output is blocked during motor starting. Refer to the alert operation pattern.	
		ALo:to	If the accumulated running hour is more than the running hour threshold, the alert output repeats close for 1s and open for 1s.	
		ALo:uc	The alert output is used only for under current protection. If this mode is selected, a trip by an under current fault is signaled through alert output(07-08), instead of overload trip output(95-96 or 97-98).	
23	Reset	rt:E-r	Fault reset (electrical reset) by a power cycle or by pressing the ESC button.	rt:E-r
		rt:H-r	Fault reset (hand reset) by only pressing the ESC button.	
		rt:A-r / Ar: 15. / Ar:20n	Fault reset (auto reset) by a auto-reset timer, Setting range of the timer : 0.5sec~20min. Also the fault can be reset by power cycle or by ESC button.	
24	Restart limitation	rn: 3	The maximum auto-restart number during 30 minutes in auto-reset mode. The auto-restart counter (count) is stored in the non-volatile memory and is cleared by pressing ESC button when the counter (count) reaches the limitation. To disable limitation, select "oFF". Setting range : oFF~5 times.	rnoFF
25	Total running hour	-trh- / 033 ⟺	In this menu, toggle display, "-trh-" and the accumulated (time) value, is activated (?) The accumulation starts from the installation and the user cannot clear the accumulated value. This display unit is 1 hour.	read only
26	Running hour	--rh- / 43.3 ⟺	In this menu, toggle display, "--rh-" and the accumulated value, is activated (?) The user can clear the accumulated value by selecting the running hour threshold to "rh : oFF". This display unit is 0.1 hour (6 minutes). By selecting "ALo : to", the user can get the alert signal through alert output (07-08) when the accumulated value is more than the running hour threshold.	read only
	Running hour threshold	rh: 10.	Threshold for alert output when the user selects "ALo : to". The unit is 10 hours and this menu is not displayed when the motor is starting or running. Setting range : 10~9990 hours, oFF	
27	Test trip	tESt	When this menu activated, OL trip signal and enabled short or EF trip signal is generated when (3s+ot) expires. The display shows "End" when the test is done. By pressing ESC, returns to the load current display mode. This menu is not displayed when the motor is starting or running. Before (3s+ot) expires, pressing ESC or motor starting or running blocks the test trip and return to the load current display. No parameter	No parameter
28	End	End	This shows the end of test trip. Test result is stored in the fault record.	No parameter

※ #1 => These are applied to 3MZ2 & FMZ2 only.
#2 => These are applied to 3DM2 & FDM2 only.

Alert operation pattern (3DM2 & FDM2 only)

ALo selection \ Running stage	Starting	Norma operation	Higher than the preset alert value	Trip
Aux (ALo: A)				
Flicker (ALo: F)				
Hold (ALo: H)				

- ALo "A" : Ampere relay function (The 07-08 output contact is closed when a current is detected)
- ALo "F" : Flickering (When a current flows, the output contact is closed and repeating the close and open on it in a higher current than the AL setting.)
- ALo "H" : Holding (The output contact is closed in a higher current than the AL setting).
- ALo "uc" : Applied to "uc" (under current protection) output contact.
- ALo "to" : When a running hour time is elapsed over the "rh" set value, the output contact repeats the close - open.

Fail-safe operation

Fail-Safe	A1-A2 not powered	A1-A2 powered and under normal operation	A1-A2 powered and Tripped
ON	95 96 Close 97 98 Open	95 96 Open 97 98 Close	95 96 Close 97 98 Open
OFF	95 96 Close 97 98 Open	95 96 Close 97 98 Open	95 96 Open 97 98 Close

Trip cause indication and fault records

3 fault records including the trip cause and 3phase currents are stored in a non-volatile memory.
When the motor is running or stopped, trip cause can be navigated by pressing ESC button over 5seconds

Trip indication					
Trip			Indication after trip with UP/ DN button pressing		
Trip cause	Indication	Contents of indication	L1 LED on	L2 LED on	L3 LED on
Over current	oc: 3.5	OC Trip caused by r(L1)-phase current	3.5	3.4	3.4
Phase loss	PL -r	Phase loss caused by r(L1)-phase lost	0.0	5.5	5.5
Reversed phase	-rP-	Phase reversal trip	3.4	3.4	3.4
Stall	St: 35.0	Stall trip during motor starting caused by s(L2)-phase curren	34.9	35.0	34.9
Jam	JA: 15.9	Jam trip during motor running caused by t(L3)-phase current	15.0	15.0	15.9
Imbalance	UB: 4.2	Imbalance trip caused by t(L3)-phase current	5.9	5.8	4.2
Under current	uc: 1.6	Under current trip caused by s(L2)-phase current	2.2	1.6	2.2
Earth fault (3MZ2/FMZ2)	EF:00.5	Earth fault(Earth leakage) trip with Earth fault current indication	3.5	3.4	3.4
Limitation of auto-restart	rn:FuL	In 30minutes, the number of auto-restar by auto-reset exceeds the setting	For emergency restart, manual reset by pressing ESC clears the restart counter to zero.		

EOCR-DM2 Series

Basic model : EOCR-3DM2 (Z) / FDM2 (Z)

Time-current characteristic curve

Definite characteristic

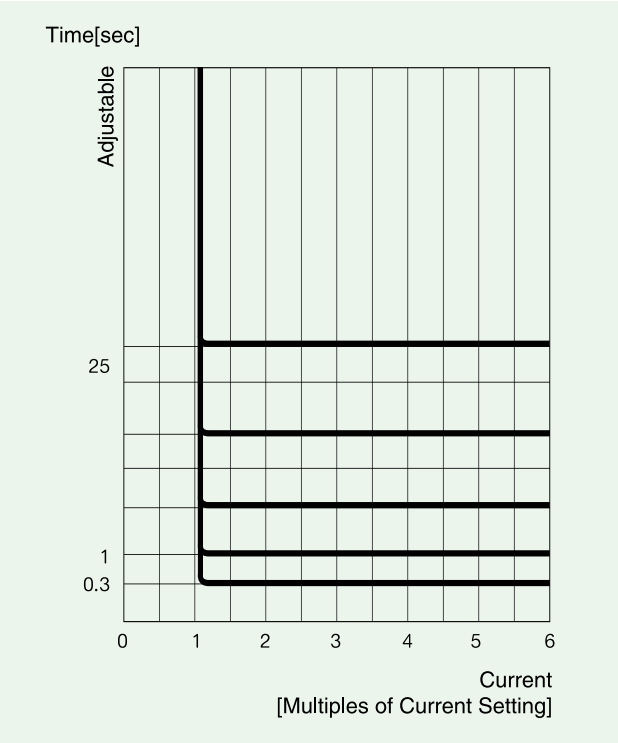

Inverse characteristic

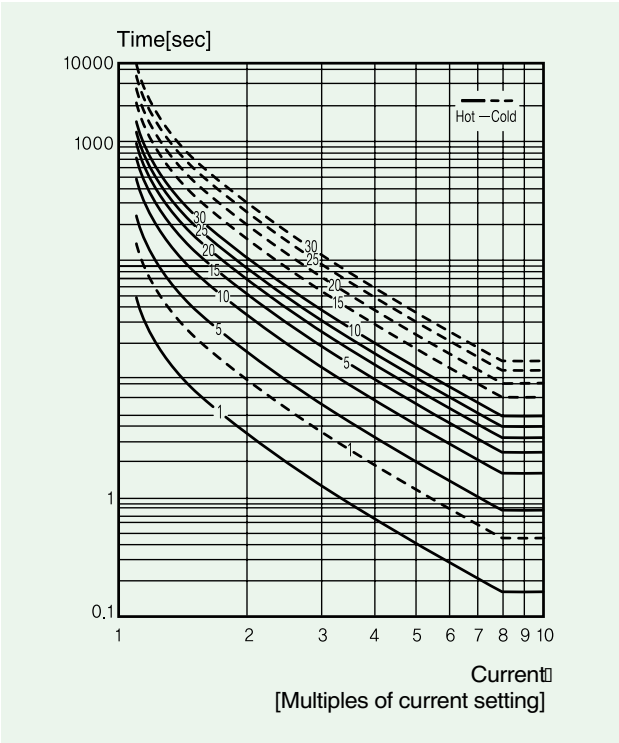

Current setting range

Setting range	Number of pass through the CT hole	External CT ratio	CT setting	Remark
0.5 ~ 60A	1	No CT combination	ct:non	
0.25 ~ 3A	2	No CT combination	ct: 2t	
0.1 ~ 1.2A	5	No CT combination	ct: 5t	
0.5 ~ 32A	1	No CT combination	ct:non	Inverse TCC
0.5 ~ 60A	1	No CT combination	ct:non	Definite TCC
10 ~100A	1	100 : 5	ct:100	Definite or inverse
20 ~200A	1	200 : 5	ct:200	Definite or inverse
30 ~ 300A	1	300 : 5	ct:300	Definite or inverse
40 ~ 400A	1	400 : 5	ct:400	Definite or inverse
50 ~ 500A	1	500 : 5	ct:500	Definite or inverse
60 ~ 600A	1	600 : 5	ct:600	Definite or inverse
70 ~ 700A	1	700 : 5	ct:750	Definite or inverse
80 ~ 800A	1	800 : 5	ct:800	Definite or inverse

EOCR-DM2 Series

Basic model : EOCR-3DM2 (Z) / FDM2 (Z)

Typical wiring schematic (EOCR-3DM2/FDM2)

Three phase motor (at FS : oFF)

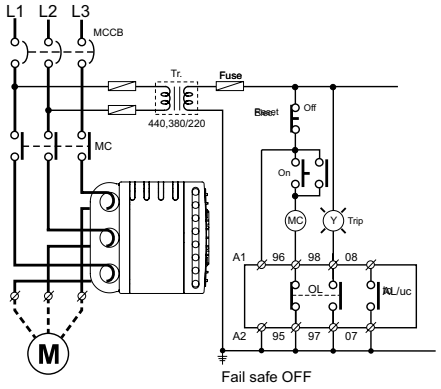

Single phase motor (at FS : oFF)

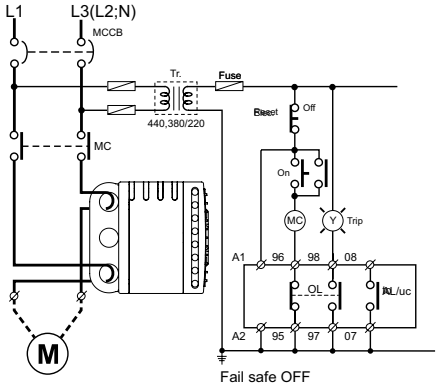

Three phase motor (at FS : oFF)

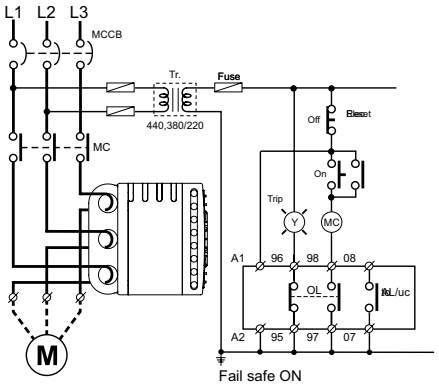

Single phase motor (at FS : oFF)

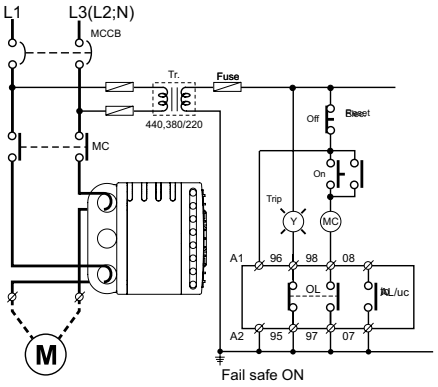

Typical wiring schematic (EOCR-3MZ2/FMZ2)

Three phase motor (A type, a-a output)

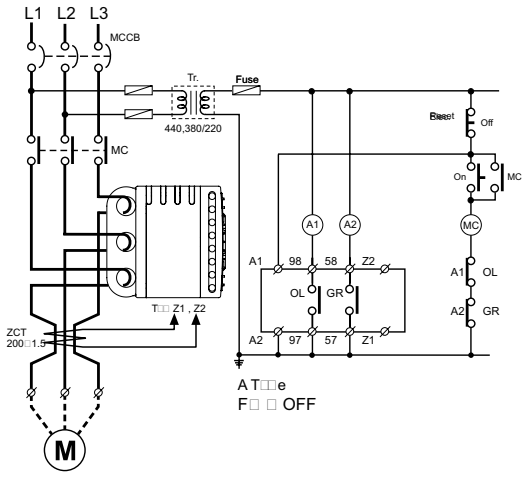

Three phase motor (C type, common output)

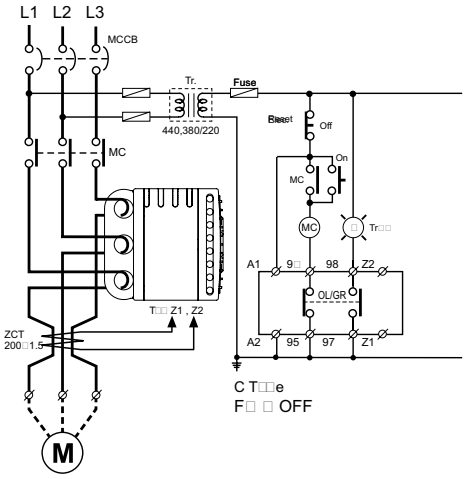

EOCR-DM2 Series

Basic model : EOCR-3DM2 (Z) / FDM2 (Z)

Typical wiring schematic (EOCR-3MZ2/FMZ2)

Three phase motor (D type, b-a output)

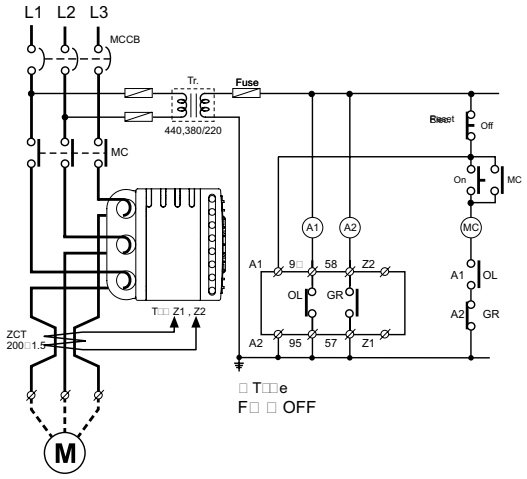

Three phase motor (D type)

※ MCCB trip for GF

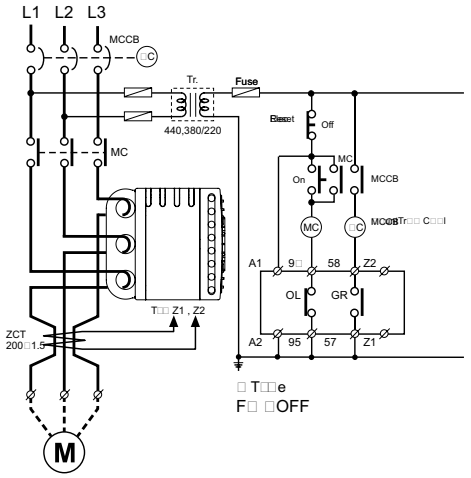

Single phase motor (A type)

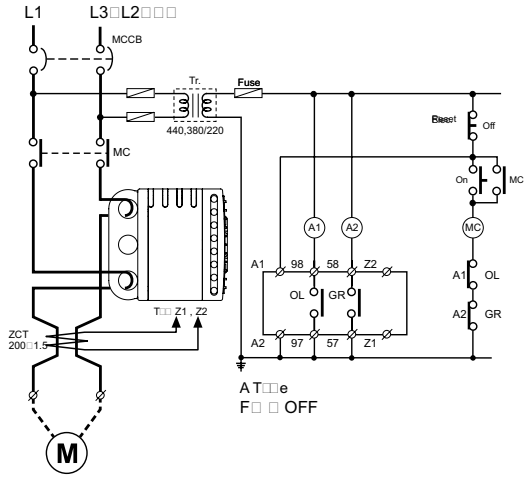

Single phase motor (D type)

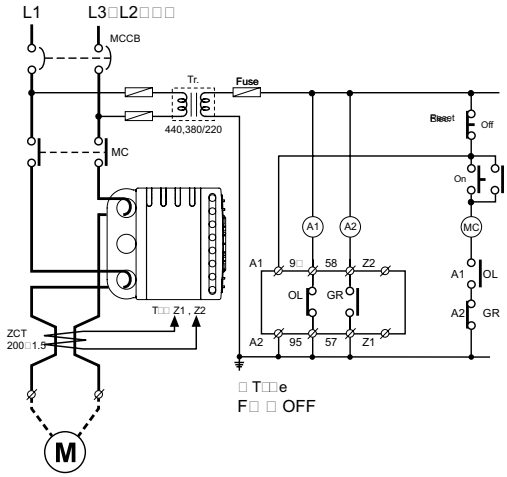

Cabling for a three phase motor

Cabling for a single phase motor

Control terminals

EOCR-3DM2/FDM2

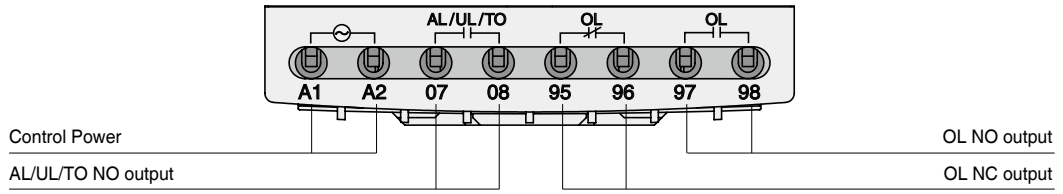

EOCR-3MZ2/FMZ2 ("A" Type)

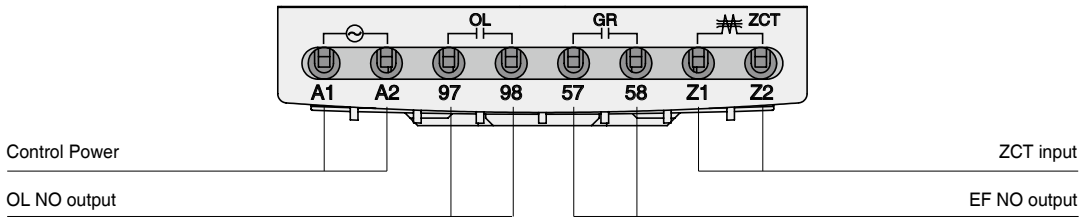

EOCR-3MZ2/FMZ2 ("C" Type)

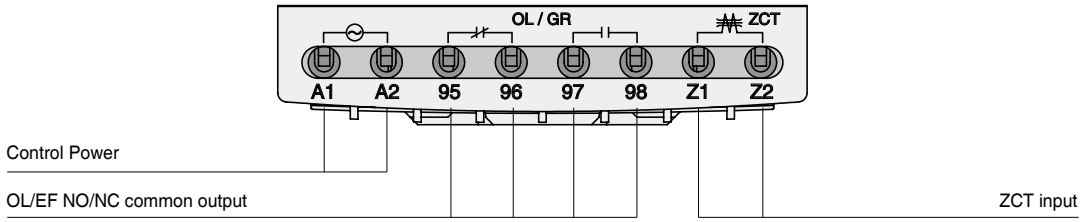

EOCR-3MZ2/FMZ2 ("D" Type)

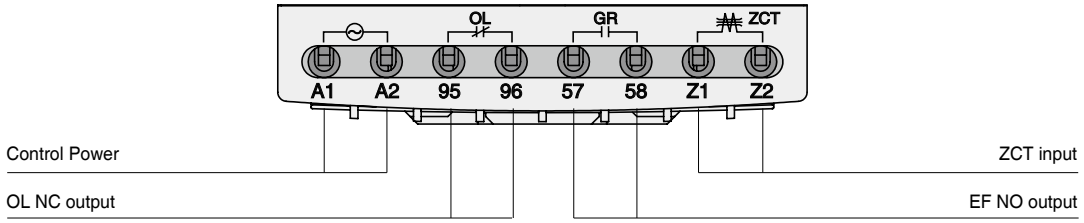

EOCR-DM2 Series

Basic model : EOCR-3DM2 (Z) / FDM2 (Z)

Dimension of 3XX2

Window type
EOCR-3DM2
EOCR-3MZ2

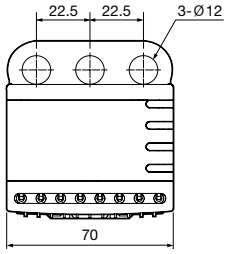

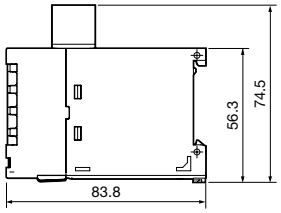

PANEL & DIN RAIL TYPE

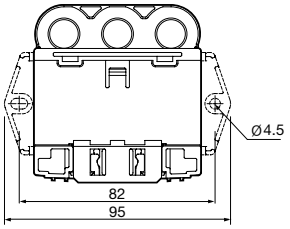

MOUNTING HOLE SIZE

Bottom hole
EOCR-3DM2
EOCR-3MZ2

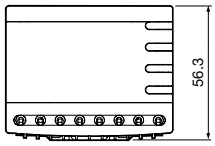

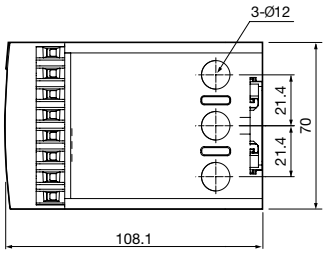

PANEL & DIN RAIL TYPE

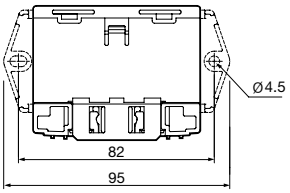

MOUNTING HOLE SIZE

Terminal hole
EOCR-3DM2
EOCR-3MZ2

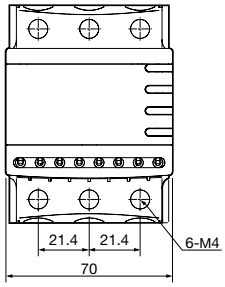

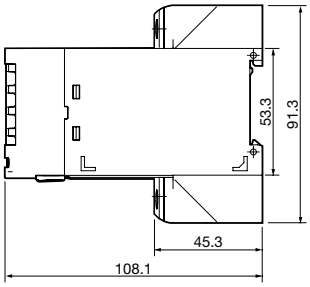

PANEL & DIN RAIL TYPE

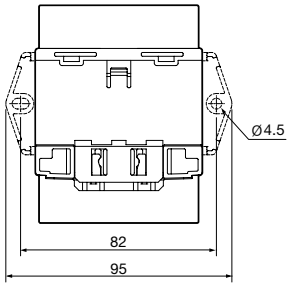

MOUNTING HOLE SIZE

EOCR-DM2 Series

Basic model : EOCR-i3DM(Z, S, 420) / iFDM (Z, S, 420)

Dimension of FXX2

Window type
EOCR-FDM2
EOCR-FMZ2

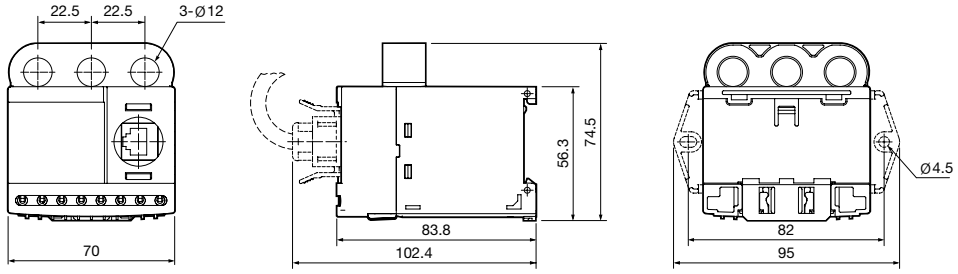

PANEL & DIN RAIL TYPE

MOUNTING HOLE SIZE

Bottom hole type
EOCR-FDM2
EOCR-FMZ2

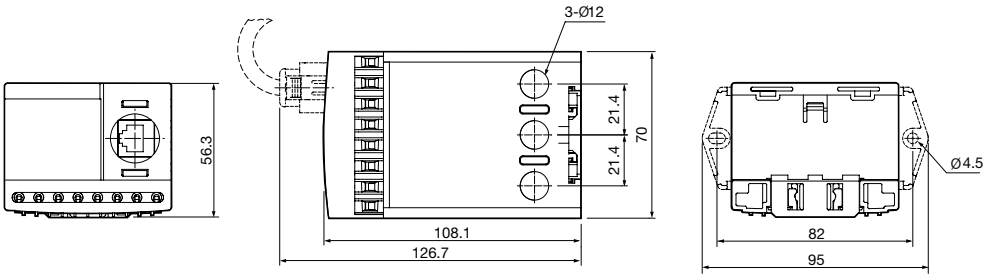

PANEL & DIN RAIL TYPE

MOUNTING HOLE SIZE

Terminal type
EOCR-FDM2
EOCR-FMZ2

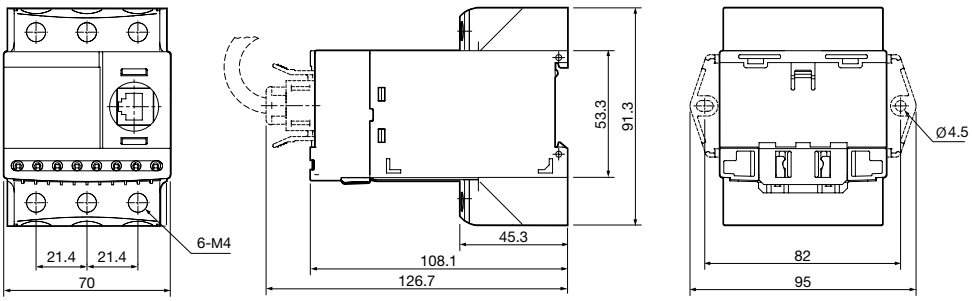

PANEL & DIN RAIL TYPE

MOUNTING HOLE SIZE

Display
EOCR-PDM

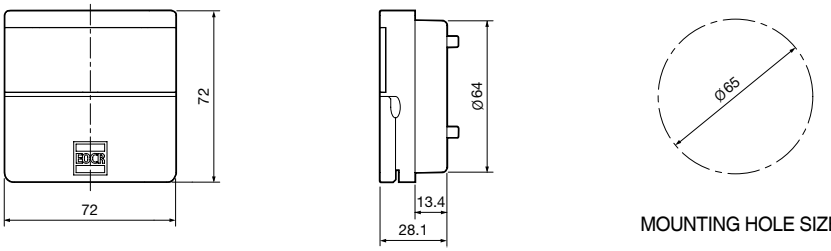

MOUNTING HOLE SIZE

EOCR-DM2 Series

Basic model : EOCR-i3DM(Z, S, 420) / iFDM (Z, S, 420)

Ordering

EOCR-3XX2

Window CT

Bottom CT

Terminal

External CT combination type

3DM2 - WR D U W Q

❶ ❷ ❸ ❹ ❺ ❻

❶	Model name	3DM2		Basic model
		3MZ2		GF model
❷	Current Range	WR		0.5~60A
		H1		100:5 3CT combination type
		HH		150:5 3CT combination type
		H2		200:5 3CT combination type
		H3		300:5 3CT combination type
		H4		400:5 3CT combination type
❸	Output contact type	3MZ2	A	a(97-98) : OC, a(57-58) : GR
			C	b(95-96), a(97-98) : OC.GR common
			D	b(95-96) : OC, a(57-58) : GR
		3DM2	D	b(95-96), a(97-98)
❹	Control voltage	B		24VAC/DC
		U		100~240VAC/DC
❺	CT type	W		Window type
		H		Bottom hole type
		T		Terminal type
❻	Export code	Q		

EOCR-FXX2

Window CT

Bottom CT

Terminal

External CT combination type

FDM2 - WR D U W Q

❶ ❷ ❸ ❹ ❺ ❻

❶	Model name	iFDM		Basic model
		iFMZ		GF model
❷	Current Range	WR		0.5~60A
		H1		100:5 3CT combination type
		HH		150:5 3CT combination type
		H2		200:5 3CT combination type
		H3		300:5 3CT combination type
		H4		400:5 3CT combination type
❸	Output contact type	FMZ2	A	a(97-98) : OC, a(57-58) : GR
			C	b(95-96), a(97-98) : OC.GR common
			D	b(95-96) : OC, a(57-58) : GR
		FDM2	D	b(95-96), a(97-98)
❹	Control voltage	B		24VAC/DC
		U		100~240VAC/DC
❺	CT type	W		Window type
		H		Bottom hole type
		T		Terminal type
❻	Export code	Q		

EOCR-DM2 Series

Basic model : EOCR-i3DM(Z, S, 420) / iFDM (Z, S, 420)

Ordering

Display

EOCR-PDMQ

Cable connector

CABLE - RJ45 - 001

❶ ❷

❶	Connector type	iFDM	
❷	Cable length	00H	0.5 m
		001	1 m
		01H	1.5 m
		002	2 m
		003	3 m
		Others	Custom made

Square 3 CT

3CT - H1 - 100 - C

❶

❶	CT ratio	H1-100-C	Square 3CT 100:5
		HH-150-C	Square 3CT 150:5
		H2-200-C	Square 3CT 200:5
		H3-300-C	Square 3CT 300:5
		H4-400-C	Square 3CT 400:5

SR-3CT

SR-3CT - 100

❶

❶	CT ratio	S1	100	100:5
		SH	150	150:5
		S2	200	200:5
		S3	300	300:5
		S4	400	400:5

ZCT

ZCT - 035

❶

❶	Inner-diameter	035	35mm
		080	80mm
		120	120mm

Memo

General information

Domestic awards

■ Korea

1985 The Presidential Prize of '85 National Invention Awards
1986 The Ministerial Prize of National Invention Promotion Awards
The KYUNGHYANG Energy Prize
The Ministerial Prize of Korea Electronics Exhibition
The Golden Prize of '86 National Invention Awards
1989 The Order of Industrial Service Merit
The Grand Prix of '89 National Invention Awards
1990 The Bronze Prize of '91 National Invention Awards
1991 The Venture Company of 1991
1994 The Electric Industry Development Prize of KOMA
The Order of Industry Service Merit
1995 The Tower of Export
1998 UN WIPO Prize
1999 The Order of Industrial Service Merit
2003. 11 The Premier Prize of SIEF
2004. 11 The Premier Prize of Electrical Engineering Awards
2006. 05 The Ministerial Prize of 41th National Invention Awards
2007. 05 The Tower Prize of 42th National Invention Awards

■ International Awards

1989 The Silver Medal of INPEX Pittsburgh
1990 The Silver Medal of Geneva International Invention Award
1992 The Golden Medal of De L'Invention De Paris
1993 The Bronze Medal of Beijing International Award
1998 The Golden Medal of IENA98. Germany

Worldwide service network

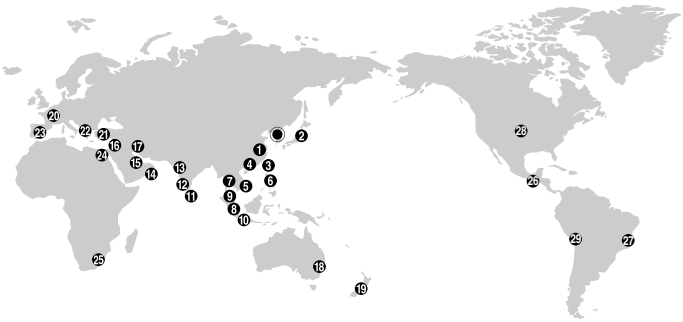

ASIA

◎Korea
❶ China
❷ Japan
❸ Taiwan
❹ Hongkong
❺ Vietnam
❻ Philippines
❼ Thailand
❽ Singapore
❾ Malaysia
❿ Indonesia
⓫ Sri Lanka
⓬ India
⓭ Pakistan
⓮ U.A.E
⓯ Bahrain
⓰ Syria
⓱ Iran

OCEANIA

⓲ Australia
⓳ New Zealand

EUROPE

⓴ Switzerland
㉑ Turkey
㉒ Greece
㉓ Spain

AFRICA

㉔ Egypt
㉕ South Africa

AMERICA

㉖ Mexico
㉗ Brasil
㉘ USA
㉙ Peru

Certifications

Approved	SS	AR	ST	SP	SE	SE2	DS	DS1 DS2 DS3	DZ	EVR	EGR SDDR	PMR	3DD	FD	3DZ	FDZ	3DM	FDM	3DE	FDE	FM 420	PMZ PFZ	SSD	CT	ZCT
CE	●	●		●	●	●	●	●	●	●	●	●	●	●	●	●	●	●	●	●	●	●	●	●	
UL	●							●									●	●		●	●		●		●
KR	●		●		●								●	●	●	●	●	●							
ABS	●													●		●		●							
SEV																									
CCS										●			●												
TÜV																	●								
CSA																									
RINA														●		●		●							
CCC	●				●	●	●	●				●	●	●	●	●	●	●	●	●	●	●	●		

Technical information

Option-1. Looping (Protect smaller current by looping option)

Some motor size may require one-third or one-fourth of particular EOCR current range. These installations can be accommodated by looping the motor wire 2 or 3 times through the integral current transformers of the EOCR. This reduces the number and type of relays inventoried for spare purposes. Each additional loop will increase the current measured as indicated by the following chart.

	Current setting range (A)	No. of passing (#)	No. of loops (#)
05 Type	0.5 ~ 6	1	0 ···
Looping Option	0.25 ~ 3	2	1 ···
	0.17 ~ 2	3	2
	0.12 ~ 1.5	4	3
	0.10 ~ 1.2	5	4
	▼	▼	▼


Single pass


Double pass

Option-2. External current transformer option
(Ext. CT option protect bigger current)

Ordering option - 05 type of each model fitted to an external current transformer can achieve higher ampere ranges.
(EOCR-3DM/3MZ/3M420/FDM/FMZ/FM420)

	DIP SW setting	Current setting range (A)	Current ratio of Ext. CT
05 Type	05	0.5 ~ 10	NIL
60 Type	60	5.0 ~ 60	NIL
Ext. CT option	05	10 ~ 120	100 : 5
	05	15 ~ 180	150 : 5
	05	20 ~ 240	200 : 5
	05	30 ~ 360	300 : 5
	▼	▼	▼

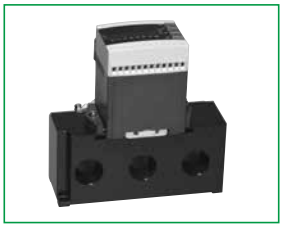

EOCR type table for 3 phase motor

EOCR type and CT	Current setting range (Adjustable) [A]	Capacity of 3 phase motor				Motor current [A]			Cable size IEC [㎟]		
		AC220 [V]		AC380/440 [V]							
		kW	HP	kW	HP	AC220V	AC380V	AC440V	AC220V	AC380V	AC440V
05	0.5~10	0.75	1	1.5	2	4.8	4.2	3.6	4	4	4
60	5~60	11	15	22	30	48	49	42	16	25	25
100:5	10~120	22	30	37	50	93	84	73	50	50	50
150:5	15~180	30	40	55	75	125	121	105	70	70	70
200:5	20~240	37	50	75	100	160	163	141	95	120	120
300:5	30~360	75	100	132	175	310	263	227	300	240	240
400:5	40~480	-	-	190	250	440	376	325	-	400	400
500:5	50~600	-	-	220	300	572	424	390	-	-	400

EOCR setting platform / Motor running current

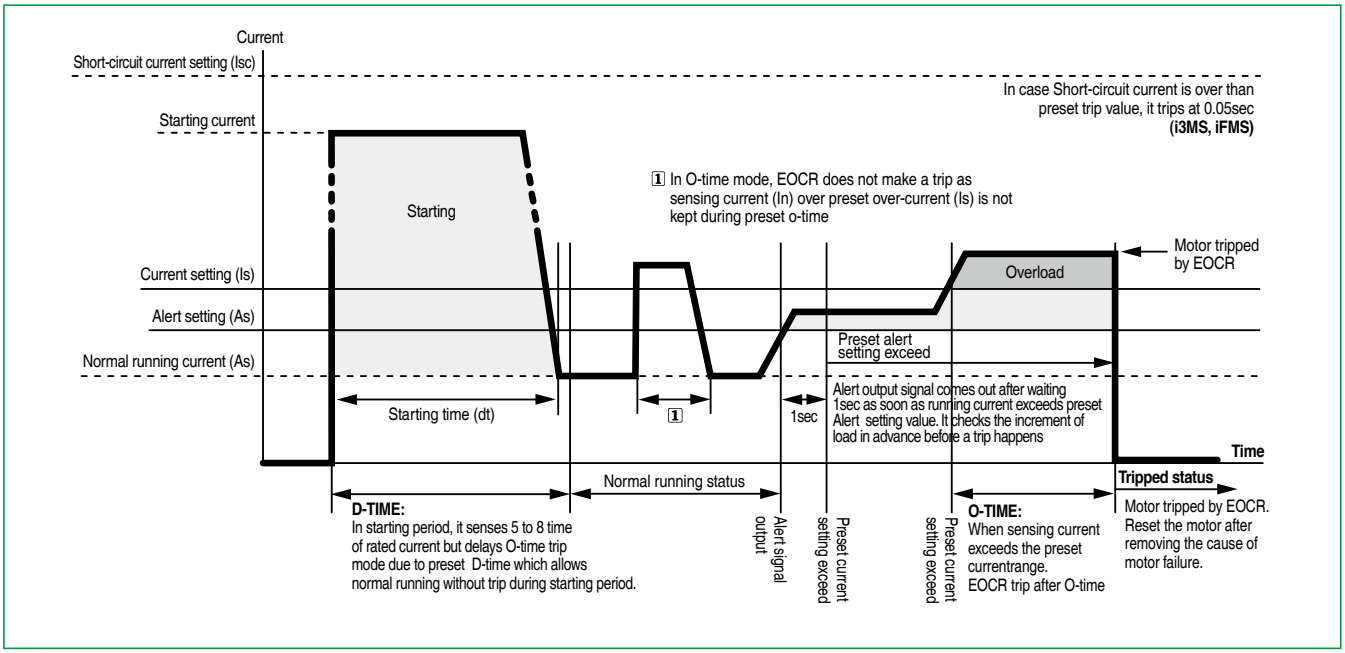

Over current and time setting tips.

■ **Setting tips in definite TCC mode**

1. Over current threshold (OC) : Set the OC at the rating current of a motor. To protect machine together, it is recommended to set at 110~120% of the actual normal operating current.

2. Starting delay time (D-time) : Set an expected start-up time to reach the normal speed of load. If you do not know it, set to 15sec at first and start-up the motor to measure the time to reach the normal operation speed by monitoring the displayed current and then change the time into 2 sec longer than the time measured. For a Y-D start, it's better to set time longer than the preset time of the timer by 2sec minimum normally.

3. Operation time (O-time) : Set the trip delay time which activates and counts down under a fault condition.

■ **Setting tips in inverse or thermal inverse TCC mode**

1. Over current (OC) : Set the OC at the rating current of a motor.

2. Starting delay time (D-time) : Usually, set D-time to zero. With zero D-time, the cold curve is applied before the load current cross down the OC, and then the hot curve is applied.
If the start-up time is long and fast trip is required during motor running, set D-time to start-up time or longer. In this case, over current protection is blocked during the start-up, and the hot curve is applied when D-time expires.
Since thermal inverse has no relation with D-time, set D-time to zero when the thermal inverse is selected.

3. Operation time (O-time) : It has 30 curves of 1~30 which conforms to the IEC947-4-1 standard.
The class value approximately equals to the time to trip under 550% of overload by the cold curve characteristic.

EOCR Setting Guide

EOCR Setting Guide

This is a setting guide and advice for user's reference only .

Conditions to be checked for the normal operation of EOCR .

1. Check the status of correct settings by pressing the UP/DN button in sequence.
2. When you enter the tEST menu and wait for 3 sec, it starts countdown during the O-time ot: 5. setting. and display End with a trip to the output . This means EOCR is operating well.
3. Check all the sequence wiring if it is safe and correct .
4. After completion of the motor starting, check if the current display is fine, When the %LED in the bar graph doesn't show, it needs to check if the operation current is too lower than the Oc setting value by 65% and on the contrary, the %LED shows 100% (red LED lights on), It is advised to check the Oc setting if the re-adjustment is necessary.
5. If the motor starting isn't completed but EOCR operates, refer to the Troubleshooting guide first and contact customer care center if the trouble isn't cleared.

Basic model (3DM / FDM)

Pd:000 — Password input is necessary to chage the setting value of EOCR, if a password is memorized except 000.
If the password is set to 000, no password input is necessary in "000" to enter the setting change mode. Please take caution not to forget the password.No password function is provided in 3DM2/FDM2, 3MZ2/FMZ2.

Ph:3Ph — The default setting is a 3phase motor. The setting change to Ph: 1Ph is necessary for 1 phase motor.

tcc:dE — Time current characteristic (TCC). the defaut setting is tcc : dE (definite TCC).

ct:non — The default setting is "non", setting value is the primary current with an external CT combination in this mode. (Ex: in case of 200; 5, the setting is 200)

FS: on — If the control power or EOCR itself has a problem, the motor stops with the output relay trip in the "FS: on" mode. The default setting is FS:oFF .

rP: on — For the application which motor rotation direction is important , "rP: on" should be set .
"rP:oFF" setting doesn't make a problem after completion of the installation for the permanent stable application.
The default setting is "rP:oFF".

oc: 3.5 — It is recommended for "oc" to set at the rating current of motor. Default setting is oc:5.0A .

dt: 5. — It means a starting delay time setting for a motor start up duration from the start of motor to the normal running current. The start up duration depends on the inertia of load. Therefore, it is recommended to set the time after measuring the time and current by EOCR with the initial set of D-time at 20 sec. For a Star-delta start, the longer time by 2sec than the setting of Star-delta timer is recommended. Default setting is 5 sec.

ot: 5. — It means the overcurrent trip time in definite TCC, when motor operating current (In) exceeds over current setting (Is) during the ot setting time, EOCR trips. Default setting is 5 sec. The advantage of definite TCC is that user is able to set accurate time and current and lead a mechanical protection of load together with motor protection.

ctS: 5. — This is a trip class(curve) setting in Inverse TCC or Thermal inverse TCC. The trip time changes according to the operating current inverse proportionally. Thermal inverse TCC reflects the Heat capacity of motor based on the current measurement.

uc:oFF — It means under current (Dry Run) protection, If a level switch has a problem in a submersible pump, It backs up the level switch function from no water running of pump and protect the motor from overheating. For the machinery running with a belt (including conveyer), It candetect a broken belt. The current setting should be higher than rating no load current of motor for this function. The default setting is "oFF" .

ut: 5. — It is "uc" trip delay time setting . If you don't set the "uc" function (uc:oFF), "ut" setting doesn't appear at the menu.

PL: on — This memu is to determine "enable/disable" of PL (Phase loss) funnction. If you set "Ph:1Ph" at the power phase selection menu for a single phase power supply line, this menu doesn't appear automatically.

PLt: 3. — It is trip delay time setting for PL. The default setting is 2 sec. For single phase power line setting, it doesn't appear at the munu.

Ub: 15 — EOCR calculates the unbalance rate among three phase currents. It trips after "Ubt" setting time under a unbalanced condition. The default setting is "oFF".

Sc: 4 — Locked Rotor protection during starting up a motor (Stall). If a rotor of motor is locked during starting and keep the current at higher than the "Sc" setting during D-time, EOCR trips in 0.5sec after D-time. The default setting is "Sc: 4".
The setting value is a multiple of "oc" setting value. This function operates under the Definite TCC condition.
It is disabled under the Inverse TCC setting generally. But if you set D-time greater than zero in Inverse setting, Stall operates when d-time expires.

EOCR Setting Guide

JA: 4 — Locked rotor protection during normal running of motor (Jam). It is used to prevent a problem caused by rapid load increae. The setting value is a multiple of “oc” setting value. The trip delay time setting range is 0.2~10 sec.

AL: 85 — Alarm setting by % of the overcurrent threshold (oc). The output contact 07-08 makes a signal of A,F,H according to the ALo setting.

rt:E-r — Reset type setting mode. Reset method shows below.

rt:E-r Electrical Reset . EOCR resets by power cycle of control power or ESC button. It can be used for a remote reset which enables EOCR to reset from a remote site.

rt:H-r Hand Reset (Manual Reset). EOCR can be reset by ESC button only.

rt:A-r Auto Reset . The time setting range is up to 20 minutes (20n). The auto reset number. of times is connected to the restart limitation setting menu. If the number of restrat over the restart limitation number. in the “rn” setting menu during 30 minutes, EOCR doesn’t reset anymore.

rn: 3 — Restart limitation number. It prevent a motor from a burning fail caused by many restarts during 30 minutes.
In case an emergency restart is necessary, put the setting at “OFF” This function activates in Auto-Reset mode only.

Ad: 1 — Modbus slave (ID) address. It can be set at No. 1 ~ 247.

bP: 19.2 — Setting for communication speed. Select one among 1.2kbps, 2.4kbps, 4.8kbps, 9.6kbps,19.2kbps, 38.4kbps.

Pr:Eun — Parity setting. Select one among odd, even, non. even parity is displayed as “Eun”.

Lt: 10 — Communication loss checking menu. If EOCR does not receive a data frame during “Lt” setting time, it displays an error message. The setting range is OFF, 1~999 sec.

-trh- — Total running hour. Time accumulation starts if there is a minimum sensing current in the line up to 99,999 hours. User can check it anytime but not allowed to erase it. Display unit is 1 hour.

-rh- — Running hour which user can set and erase the setting value. If you set the Alert output type at the “ALo: to”, the output contact 07-08 repeats close and open to give a signal after the preset accumlated time elapsed.

tEst — Self EOCR Check. If you push SET button in this menu, EOCR count time up 3sec and “ot” setting time and displays “End” with the output contact trip. This means EOCR is operating well. This function is blocked during motor running.

Additional menu (i3MS/iFMS)

SH: 10 — Short Circuit protection. Setting value is a multiple of “oc” set value.
Default setting is 10 times of “oc” setting.

SHd: 7. — Short Circuit trip delay time during motor starting to prevent a trip caused by starting current.”OFF” setting is possible .

Additional Menu (i3MZ/iFMZ, 3MZ2/FMZ2)

Ec: 0.5. — Earth leakage protection current setting. The default setting is 0.5A. Minimum setting value is recommeded, if there is no leakage current in the motor by the current display. If the display shows a leakage current more than 50mA, user must check the insulation of motor and line. In the case of installing EOCR at the secondary side of Inverter, it’s better to take care of EOCR opreration error due to harmonics of Inverter.

Et:00.5. — Earth leakage trip time. The default setting is “0.05sec”.
It is recommended to set the faster time and lower current than the earth fault protection relay in the upper power system.

Edt: 6. — Earth leakage trip delay time during motor starting to prevent a trip caused by a stray current and harmonics of the starting current in motor.

Additional menu (i3M420/iFM420)

rS: 5.0 — Current range setting menu of 4~20mA analog output signal. The setting value corresponds to the max analog output (20mA). The setting value can be made independently from “oc” setting .
Analog output current formula :

$$mA = \frac{I}{rS} \times 16 + 4$$

Where, CTR is the parameter for CT, i.e. in case of CI : non, it is 1. I is the measured average lond current.
If the load current is equal or greater than this value, analog output is fixed to 20mA . For the current lower than minimun sensing current of EOCR(0.4A), the analog output signal gives 4 mA .

Troubleshooting Guide

Troubleshooting Guide

1. Reversed phase : -rP-

It trips instantly within 0.15sec from the motor starting. Check the phase sequence and cable direction of the power line going to the motor first. The sequence of EOCR internal CT is A(L1), B(L2), C(L3) from the left side. If the passing order of motor line to the EOCR doesn't coincide with the order of EOCR CT or not same all the direction of cables, It trips by RP. In this case, change the order of the two cables among three. When the sequence of cables to the motor changes in the downstrenm side of EOCR , EOCR isn't able to check the RP. The sequence of cables should be coincided from the power mains to the motor. If the RP is not an indispensable function or only necessary for the first installation and fixed in the site, The rP:oFF setting is recommended for normal operation.

2. Overcurrent : oc: 36

Overcurrent trip displays the biggest current among three phases and the small LED in the left side shows the phase.

If the trip current is lower than the rating current of motor, check the "oc" setting if it is too low. The recommended "oc" setting is 110%~120% of actual running current in the definite TCC.

3. Stall : Sc:35.0

When the starting current doesn't go down below the "Sc" setting during D-time. EOCR trips by Stall within 0.5se when D-time expires. Check the status of load and D-time, whether the D-time is too short or not. The recommended D-time is longer by 1sec than a time that the motor come to the normal running current .

4. Phase loss : PL -r PL -S PL -t

The small LED in the left side lights up and designates which phase is lost in the display like as PL - r, PL - S, PL - t,

To check the PL status, put the PL trip time at the maximum and measure the lost phase current by a clamp meter after a test start, whether there is a current in the motor line or not. The minimum operating current (min setting current) of motor sensed by EOCR can make trip due to hunting current. Need to check load operation condition of the application in this case. If the clamp meter shows a normal current in the lost phase line, Check the EOCR status.

5. Unable to starting :

Even though the sequence wiring is O.K. If the motor is not able to be started with no magnetic contactor energized, Check the Fail Safe menu of FS: on FS:oFF with the output contact status (NO, NC) of EOCR .

6. Undercurrent : uc: 16

Undercurrent trip displays the lowest current among three phases and the small LED in the left side shows the phase.

The example shows the sensing current of 1.6A in L2(S) phase. For the heater line broken detection in a heater application. EOCR trips by undercurrent according to the setting in delta connection, and trips by phase loss in Star connection.

7. Current unbalance Ub: 42

Ideally, the motor currents of three phases are balanced. If a current unbalance is high, the motor need to be checked.

The formula is as follows.

Unbalance factor (%) = $(I_{max\ phase} - I_{min\_phase}) / I_{max\_phase} \times 100\%$

8. Jam JA: 15.8

Rapid overload protection during motor running, Check the load which cause impacts it. If you find no problem in the load and motor, try to chage the setting value higher of the time and current to be appropriate for the application.

9. Unable to reset rt:H-r

If you cannot reset EOCR by control power interruption, Check the reset type setting first. In the setting rt:H-r

User can reset EOCR by ECS button only. If you want to reset EOCR by both control power cycle and ECS button, Put the setting rt:E-r

Modbus network setting

Communication setting value

Please set the Modbus communication parameters by PCON or HMI for the communication.

- Slave address
- Baud rate
- Parity
- Communication loss timeout

Slave address

The EOCR has slave addresses from 1 to 247.
The factory default setting is 1.

Baud rate

The Communication speed provided is like below.

- 1.2kbps
- 2.4kbps
- 4.8kbps
- 9.6kbps
- 19.2kbps
- 38.4kbps

The factory default setting is 19.2kbps

Parity setting

- Even
- Odd
- None

The factory default setting is even. Please refer to the table for the stop bit setting.

Parity setting	Stop bit
Even or Odd	1
None	2

Communication loss timeout

It is the criteria to confirm the communication disconnection with a master like as PLC. EOCR judges it as a communication disconnection error, if there is no call from the master during a certain preset time.
The time setting range is 1~999sec the factory default setting is OFF. The OFF means no communication error check. It is advised to set it at OFF, if there is no concern of communication disconnection or no needs of communication error check at ordinary times.

RS485 bus connection

RS485 standard allows several different characteristics.

- Polarization
- Line terminator
- Number of slaves
- Length of the bus

There is a definition of Modbus presented in detail at the website of Modbus.org in 2002.
Standard connection

Standard connection

The standard connection conforms to the Modbus specifications, sepecially 2 wire multidrop serial bus diagram, presented at the website of Modbus.org in 2002 (Modbus_over_serial_line_V1.pdf, Nov.2002). Simple wiring diagram is like below.

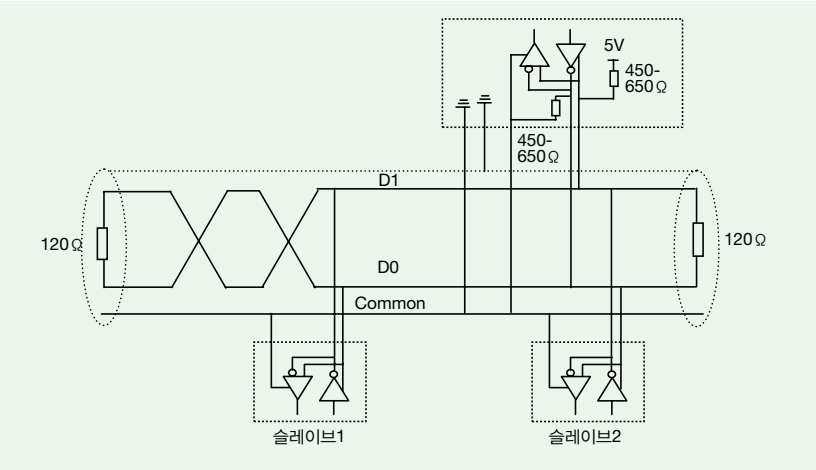

The characteristics is like below in case of a direct connection to the bus.

Items	Contents
Type of trunk cable	single, shielded, twisted pair cable. Min 3rd cable
Maximum length of the bus	1000m (3,2181 ft) (at 19.2kbps)
Maximum number of stations without repeater	32 stations (31 slaves)
Maximum length of tapoffs	• 20m (66ft, at 1 tapoff) • 40m (131ft, divided by tapoff no. in Multi-Junction Box)
Bus polarization	• 450 - 650Ω Pullup resistor, 5V basis • 450 - 650Ω Pulldown resistor, Recommend the polarization to Master at Common. There is no polarization at RS485 of EOCR.
Line terminator	120Ω Resistor, + /- 5%
Common polarity	YES (connect 1 protection ground minimum to the bus)

Bus connection through a SCA type junction box

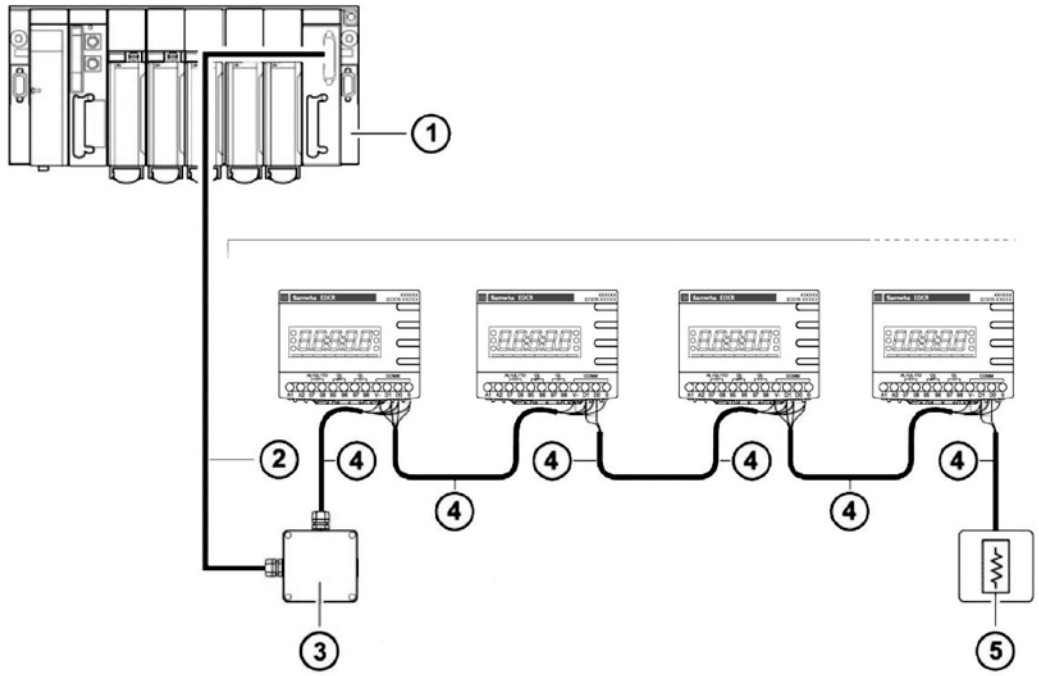

1. Master (PLC, PC or communication module)
2. Modbus cable (It is different according to the master side or a master having polarization combined to the other part of Bus)
3. Junction box
4. Modbus cable
5. Line terminators : 120Ω - 0.25W

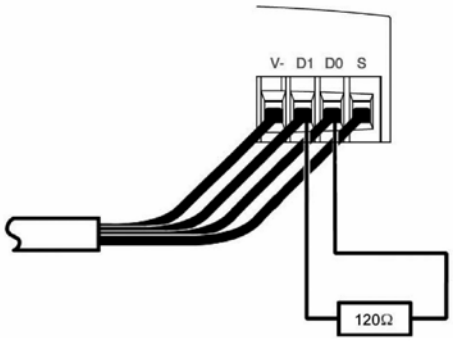

Please use a cable with 2pair shieded twisted conductors for Interface protection.
It is adviced to isolate the Modbus cable 30cm(11.8in) at least from a power cable.
If necessary, intersect the Modbus cable to a power cable perpendicularly.
Refer to the diagram in the left side for the line terminator wiring.

EOCR-i3BZ/iFBZ/3BZ2/FBZ2

EOCR-i3BZ / i3BZ2 Bottom hole type

EOCR-iFBZ / iFBZ2 Bottom hole type

EOCR-i3BZi / 3BZ2 Terminal type

EOCR-iFBZ / iFBZ2 Terminal type

Main Features

- Earth fault detection by built-in ZCT
- Multifunctional motor protection for rated motor currents up to 80A (Definite Overcurrent protection) : Over Current, Under Current, Phase Loss, Phase Reversal, Stall, Jam, Current Imbalance, Earth Fault
- Thermal Inverse / Inverse overload protection up to 32Amps by integrated CTs.
- Real Time Processing / High Precision
- Ancillary Functions : Fail Safe, Alert("C" Type Only), Accumulated Running Hour, 3 Fault records & limitation of auto-reset attempt.
- Communication : Modbus-RTU/RS-485(i3BZ/iFBZ only)
- Reinforced Monitoring Function : Real Time Monitoring up to 400M, 3 Phase Current Display, Pre-alarm & Cause of Trip indication.
- Load ratio indication of Load Current to over-current threshold.
- Support Single-phase and 3 Phase Motor
- For iFBZ / FBZ2, normal operation except display is guaranteed when PDM is disconnected

EOCR-i3BZ/iFBZ/3BZ2/FBZ2

Protection functions

Item	Operating Condition & Setting Range	Operation Time
Over Current (oc)	Load current(In) exceeds threshold(Is) Setting Range : 0.5~80A(Def), 0.5~32A(Inv & th)	Definite(Def) : 0.2~30s Adjustable Inverse(Inv) & Thermal(th) : 1~30 Class*1)
Under Current (uc)	Load current(In) less than threshold(uc) In <= uc uc should be less than oc Setting	oFF, 1~30s Adjustable
Phase Loss (PL)	max imbalance is more than 85% among 3 phase current, Enable or disable : Selectable	oFF, 0.5~5s Adjustable
Reverse Phase(rP)	Reversed phase sequence input on EOCR. Enable or disable : Selectable	Within 0.15s
Stall (Sc)	Active only in motor starting, In ≥ Stall threshold (Sc×OC). Setting Range : Adjustable 2~8 times of oc setting if Sc×OC doesn't exceed 250A	Immediately after D-Time elapsed
Jam (JA)	Active only in motor running, In ≥ Jam threshold (JA×OC). Setting Range : 1.5~8 times of oc setting if JA×OC doesn't exceed 250A	0.2~10s Adjustable
Unbalance (ub)	Current unbalance ≥ threshold1~10s Adjustable. Setting Range : 10~50% Unbalance[%] = 100 × (Max phase current - Min phase current)/ Max phase current	1~10s Adjustable
Earth Fault (EF)	EF current(Ie) exceeds threshold(Ies) Setting Range : oFF, 0.03~10A	0.1~10s Adjustable

**1)) 3BZ2/FBZ2 has no thermal inverse protection*

Auxillary functions

Password	Secure configuration, available only with i3BZ/iFBZ
3-phase / single phase setting	The selection enables application to 3-phase or single phase motor without urther setting
Communication	Serial network communication for monitoring of metering, status, and fault history
Phase selection	Select a single-phase motor or 3-phase motor
Fail Safe	Enable/Disable fail-safe operation of OL trip output
Total Running-Hour	Record of total from installation which cannot be modified or cleared
운전시간 저장	설정 또는 삭제가 가능한 운전 시간 저장기능으로 설정한 시간이 지나면 확인이 가능한 기능 운전시간을 설정 → 경과 후 미터에 표시가 됨
복귀 방법 선택	수동/자동/전기적 복귀 선택기능
Fault History	Records for recent 3 faults each phase current which stored in a non-volatile morory
Limitation of autoreset attempt	Block auto-reset if the reset count exceeds the pre-set count whtin 30 minutes

Communication function (Applicable to i3BZ/iFBZ)

Item	Setting	Remark
Protocol type	Modbus RTU	
Communication type	RS-485	
Baud rate	1.2, 2.4, 4.8, 9.6, 19.2, 38.4 kbps	
Maximum length of the bus	Maximum 1.2kM	Depend on the environment
Type of trunk cable	RS-485 Shielded Twist 2-Pair Cable	

EOCR-i3BZ/iFBZ/3BZ2/FBZ2

Specifications

Model			i3BZ/iFBZ, 3BZ2/FBZ2
Over Current		Rated Setting Range(A)	Definite TCC : 0.5~80A
			Inverse & th TCC : 0.5~32A*1)
Under Current		Rated Setting Range(A)	0.5A ~ less than oc setting
Earth fault current			oFF, 0.03~10A
Operating Time Characteristics			Definite(Def) / Inverse(Inv) / Thermal Inverse(th)
Time Setting	Definite	D-Time	0~200s
		O-Time	0.2~30s
	Inv & th (cLS)		1~30 Class
	GF delay time (Edt)		0~30s
	GF O-time (Et)		0.1~10s
	Reset Mode		Manual Reset (H-r) / Electric Reset (E-r)
Control		Power Voltage	100~240VAC/DC(-15%, +10%, Free Voltage), 24VAC/DC(-15%, +10%)
		Frequency	50/60Hz
		Power Consumption	Lower than 7VA
Output		Capacity	3A/250VAC Resistive.
		Composition	NO/NC common output : OL , NO output : GR
Display		7 Segment LED	3 phase Amps, Cause of trip, Setting parameters indication.
		Bar graph	Load ratio (65 ~ 100%)
Communication (i3BZ/iFBZ)			Modbus/RS-485
Mounting			Panel Mounting (i3BZ/3BZ2) /Flush Mounting (iFBZ/FBZ2)
Insulation		Between Case & Circuit	Over DC500V 10MΩ
Dielectric Strength		Between Case & Circuit	2KV, 50/60Hz , 1 Min
		Between Contacts	1kV, 50/60Hz, 1 Min
		Between Circuit	1.5kV, 50/60Hz, 1 Min
Electrostatic Discharge(ESD)		IEC61000-4-2	Level 3 : Air Discharge : ±8kV, Contact Discharge : ±6kV
Radiated Disturbance		IEC61000-4-3	Level 3 : 10V/m, 80~1000MHz
Conducted Disturbance		IEC61000-4-6	Level 3 : 10V, 0.15~80MHz
EFT/Burst		IEC61000-4-4	Level 3 : ±2kV, 1 Min
Surge		IEC61000-4-5	Level 3 : 1.2×50μs, ±2kV(0°, 90°, 180°, 270°)
1MHz Burst Disturbance		IEC61000-6-12	Level 3 : 2.5KV, 1MHz
Emission		CISPR11	Class A(Conducted and Radiated)
Environment	Temperature	Store	-40℃~+85℃
		Operation	-20℃~+60℃
	Humidity		30~85% RH (Non-condensate)
Dimension			70W×56.3H×108.1D
Weight			EOCR-i3BZ : 295g, EOCR-iFBZ : 280g
			EOCR-3BZ2 : 292g, EOCR-FBZ2 : 276g
		PDM(Cable 3M)	125g (120g)

**1) 3BZ2/FBZ2 has no thermal inverse protection*

Time-current characteristic curve

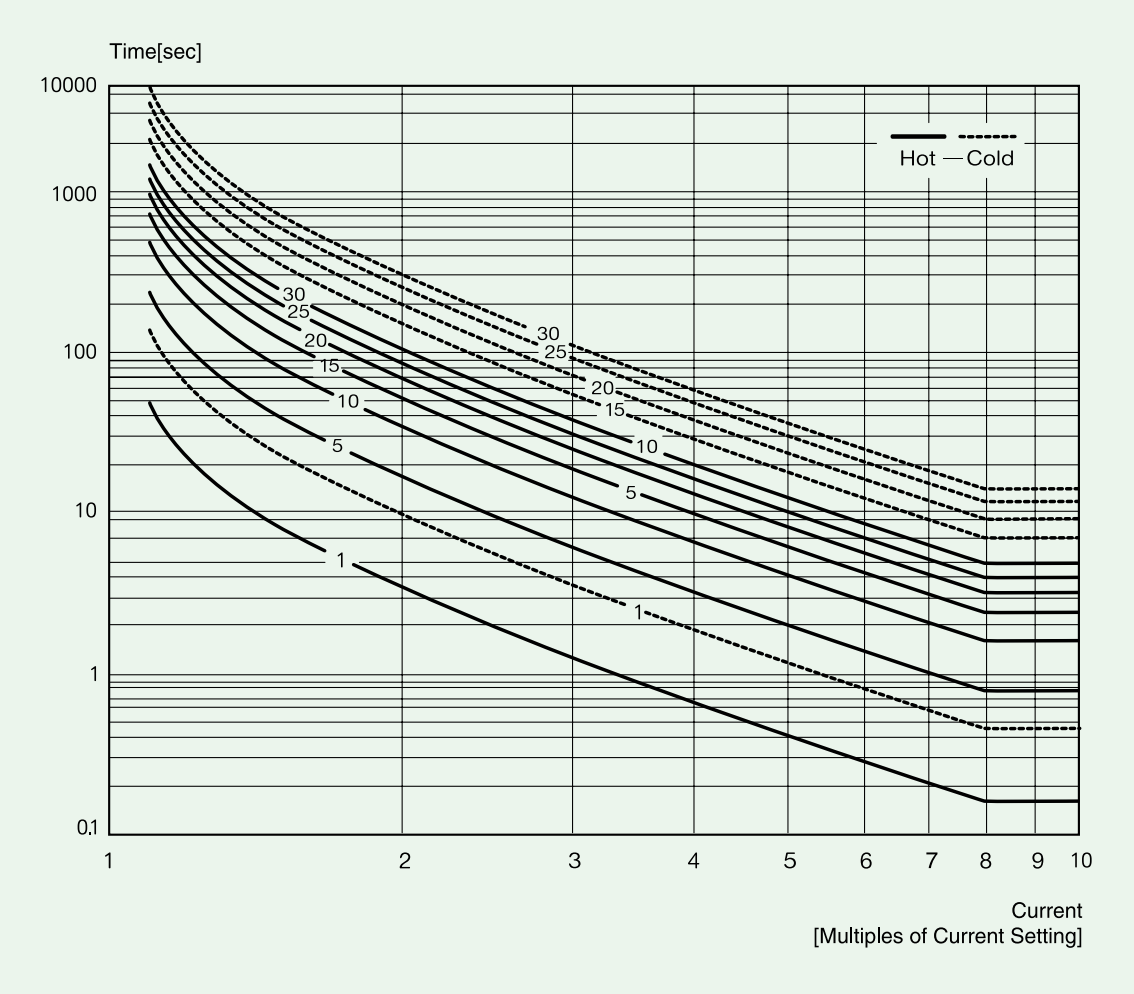

Table1. Inverse characteristic (0.5~32A)

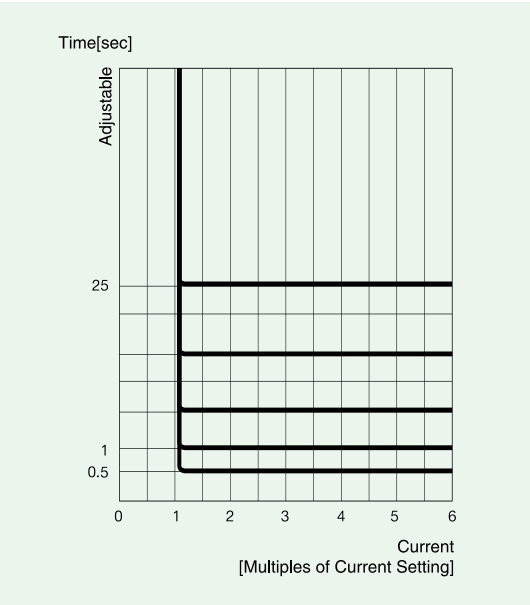

Table2. Definite characteristic

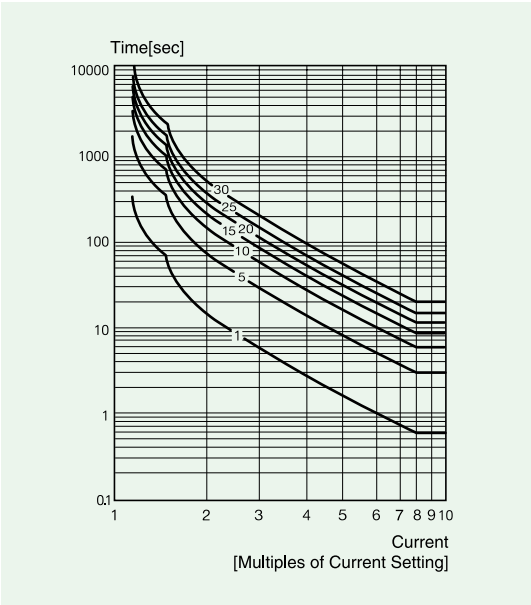

Table 3. Inverse thermal characteristic (0.5~32A)

Over current and time setting tips

- **Over current**

Setting tips in definite TCC mode

1. Over current threshold (OC) :
   - Set the OC at the rating current of a motor. To protect machine together, it is recommended to set at 110~120% of the actual normal operating current.
2. Starting delay time (D-time)
   - Set an expected start-up time to reach the normal current of load. If you do not know it, set to 15sec at first and start-up the motor to measure the time to reach the normal operation current by monitoring the displayed current and then set the time at 2 sec longer than the time measured. For a Y-D start, it's better to set time 2 sec longer than the preset time of the Y- change timer.
3. Operation time (O-time) : Set the trip delay time which activates and counts down under a fault condition.

Configuration tips when Inverse or Thermal Inverse characteristic is necessary

1. Overcurrent threshold (oc) :
   - This value is the basic current and from the point of 105% of oc, the inverse curve starts. Usually oc is set to the rated current of the motor.
2. Starting delay time (D-time)
   - Usually this value is set to zero. With zero D-time and Inverse is selected, first the cold curve is applied until the load current drops down the oc value, and then the hot curve is applied.
   - But if the user wants fast trip with very high current during starting, set D-time other than zero. With non-zero D-time, the enabled STALL funtion detects very high current immediately after the D-time elapsed.
   - If the Inverse is selected, and D-time is non-zero, the Inverse function is blocked during starting, and the hot curve is applied after D-time elapsed.
   - If Thermal Inverse is selected, it detects overcurrent regardless of D-time. That is, thermal inverse is activated during motor starting as well as motor running.
3. Operation time (O-time) :
   - When Inverse or Thermal Inverse is selected, O-time setting determines the trip class. nEOCR supports trip class from 1 to 30. Refer to the graphical representation of Inverse or Thermal Inverse to check trip time.

Alert Operation Pattern

Do use this function by OL/GR common output.

Running Stage / ALo Selection	Starting	Normal Operation	Higher than the preset Alert value	Trip
Aux "A"				
Flicker "F"				
Hold "H"				

Front face

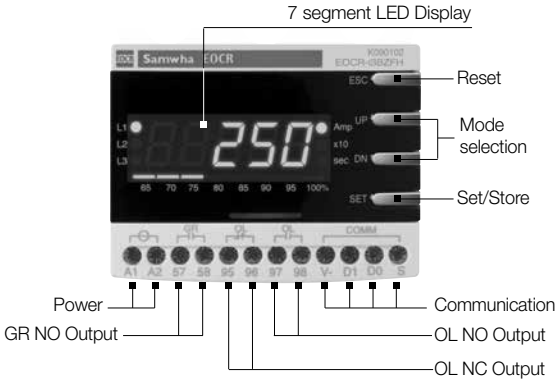

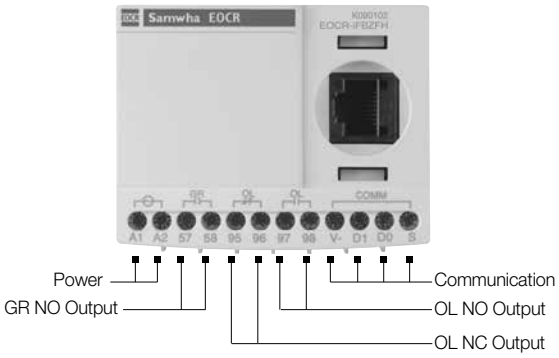

3 phase currents (In) and the leakage current are displayed every 2 seconds in sequence.

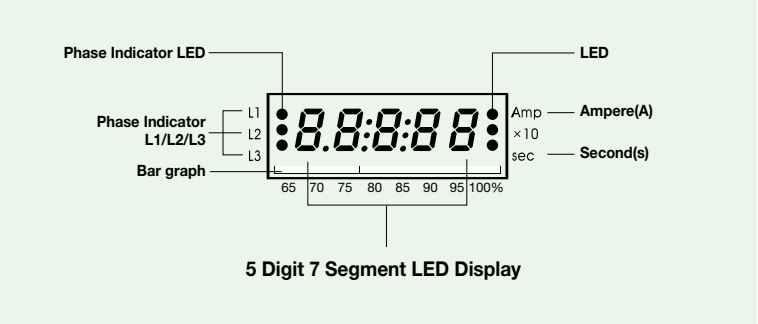

7-segment LED

A large font and a comfortable background color are used to prevent visual interference caused by reflections from the control panel in any direction.

Bar graph

- it shows the load factor to OC setting value by %
- % value = (running current/setting current) × 100%
- Min scale is 65%
- if the setting value is the rated motor current, it shows the load factor of the motor.

Current display

- Shows the highest current among three phases for oc, Stall, Jam trips.
- Shows the lowest current among three phases for uc, Ub trips.
- Shows the lost phase for PL.
- Shows the phase and the current during running.

Amp : Ampere. LED is on when a current display.
× 10 : Shows the unit changed to 10 times.
Sec : Second. LED is on when a time display.

3-Phase Digital Ammeter Function

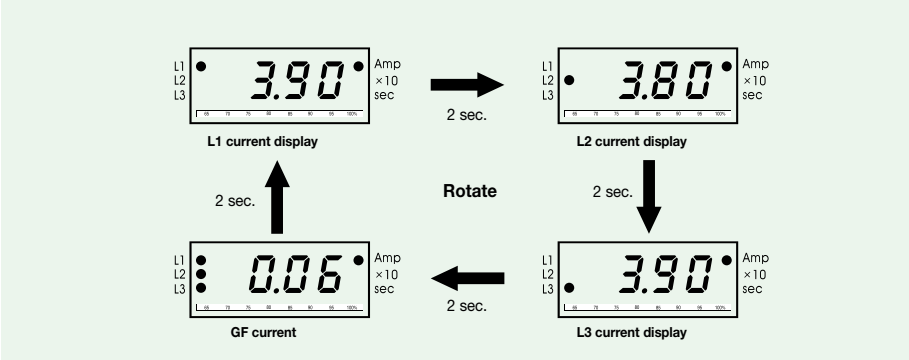

※ *Blocking display rotation can be done by pressing the SET button once during running. whenever press the SET button, the each phase current displays by turns. A fixed phase current display can be done by this.*

※ *Pressing the ESC button, it returns to the Auto current display rotation mode.*

Buttons and Setting Sequence

Button	Description
▲UP ▼DN	Navigate menus by pressing UP/DN button.
SET	Select a parameter to change, then the parameter starts blinking.
▲UP ▼DN	Modify a parameter value by pressing UP/DN button.
SET	Memorize the values in the relay by pressing SET button. blinking stops to show it's stored.
ESC	Pressing ESC button, it returns to the current display. Without pressing ESC button, it returns to the load current display in 50sec automatically.

※ *Fault history check : Pressing the ESC button more than 5sec, it displays the latest fault cause and the fault current or fault phase. Continuing to press DN button, you can see the current of L1(R), L2(S), L3(T), (GR) in turn. Press the DN button again to check the previous fault continually. In the latest fault display, the 100% LED of bar graph lights on and two LEDs of 95%, 100% lights on for the second fault display, three LEDs of 90%, 95%, 100% lights on for the oldest fault display. When you press the ECS button in this mode, it returns to the normal current display mode. The oldest fault record is over written when the number of fault to record exceeds three.*

• Setting sequence

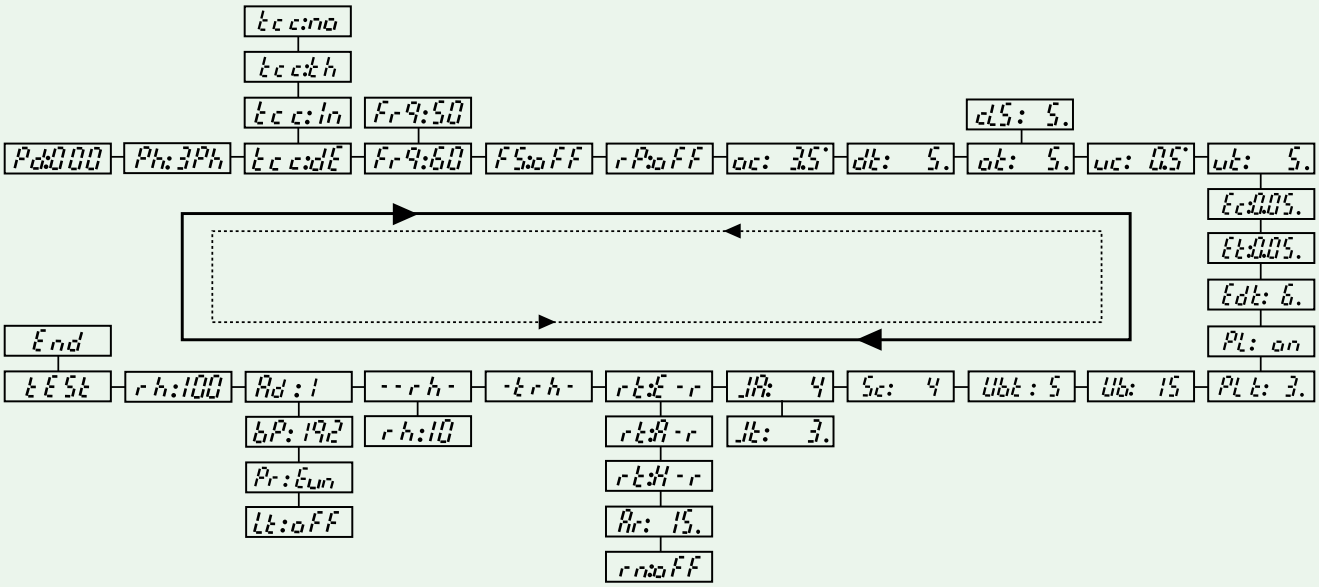

Setting sequence and menu

No.	Menu	Parameter	Description	Default
1 *1)	**Password**	Pd:000	Use password other than zero for secured configuration. This feature enables limitation of setting modification by unauthorized person. Zero value is used for disabling password checking.	Pd:000
2	**Selection of Phase**	Ph: 3Ph / Ph: 1Ph	"Ph:3Ph" mode for a 3 phase load, "Ph:1Ph" mode for a 1 phase load should be selected. If you select the "Ph:1Ph", RP, PL and Ub functions will be disabled and not displayed in the menu mode.	Ph: 3Ph
3 *2)	**TCC Selection**	tcc:dE / tcc:In / tcc:th / tcc:no	Time-Current Characteristic(TCC) setting. "dE" is for Definite TCC, "In" is for Inverse TCC, "th" is for thermal inverse TCC. Refer to the time-current characteristic curve . If tcc=no, only overcurrent protection is disabled.	tcc:dE
4	**Frequency**	Fr:60	Select 50 or 60 based on the system fundamental frequency.	Fr:60
5	**Fail Safe**	FS: on / FS:oFF	Selection of Fail Safe(No volt release) operation for overload trip output, OL. Refer to Fail-Safe Operation.	FS:oFF
6	**Reversed Phase detection**	rP: on / rP:oFF	Enable or disable reverse phase detection.	rP:oFF
7	**Over Current Threshold**	oc: 3.5	Threshold for Over Current protection which cannot be set below the under current threshold(uc).	oc: 5.0
8	**Start Delay Time**	dt: 5.	Motor Starting delay, OC, UC, Stall, Jam, Ub are blocked during starting but PL, RP, and thermal inverse are not blocked. For "In" TCC mode, the cold curve is applied during before dt is activated and the hot curve is applied after the dt expired.	dt: 5.
9	**Over Current Duration**	ot: 5. / cLS: 5	tcc:In the trip class for inverse overcurrent protection(refer to TCC curve) tcc:th the class for thermal overload protection based on the thermal image by load current (refer to TCC curve).	ot: 5.
10	**Under Current Threshold**	uc: 0.5	Threshold for Under Current protection. The setting should be higher than no-load current of a motor. The current value cannot be set higher than OC.	uc:oFF
11	**Under Current Duration**	ut: 5.	Fault duration for the Under Current Operation. If the setting of "oFF" in the "uc" mode is selected, this menu is not displayed.	ut: 5.
12	**Earth Fault (Ground Fault) Threshold**	:Ec:0.05	Threshold for Earth Fault protection. The capacitance leakage current of the motor and cable should be taken into account for the setting. The threshold value corresponds to the primary current of ZCT.	:Ec: 0.5
13	**Earth Fault Duration**	Et:0.05.	Earth Fault duration TCC is always a definite characteristic for earth fault detection.	Et:1
14	**EF starting Delay**	Edt: 6.	Blocking time of Earth Fault detection during motor starting. oFF, 1~30s adjustable This timer is only active during motor starting.	Edt: 0.
15	**Phase Loss**	PL: on / PL:oFF	Enable or disable Phase Loss(Single Phasing) detection. If the "Ph:1Ph" is selected , this menu is not displayed.	PL: on
16	**Phase Loss Time**	PLt: 3.	Fault duration for Phase Loss Operation . The setting range is 0.5~5 sec. if "PL:oFF" is selected, this menu is not displayed.	PLt: 2.
17	**Unbalance Threshold**	Ub: 15	Threshold for Current Unbalance operation. To disable the function, set to "oFF", The setting range is 10~50%. Unbalance factor (%) = (max phase-min phase) / Imax phase ×100%	Ub: 50
18	**Unbalance fault duration**	Ubt: 5	Unbalance fault duration for Current Unbalance operation. The setting range is 1~10 seconds.	Ubt: 5
19	**Stall threshold**	Sc: 4	Threshold for locked rotor detection during motor starting. The value is the multiples of the over current threshold(oc). If the locked rotor condition is detected, the trip relay operates in 0.5s after the "dt" expires. If dt=0, this function is disabled and not displayed in the menu.	Sc: 4
20	**Jam threshold**	JA: 4	Threshold for locked rotor detection during motor running. The value is the multiples of the over current threshold (oc)	JA: 4
21	**Jam fault duration**	Jt: 3.	Jam Fault duration	Jt: 5.

Setting sequence and menu

No.	Menu	Parameter	Description	Default
22	Alert	AL: 85 / AL:oFF	Threshold of Alert output, set by % of the over current threshold (oc). If the load current is higher than this value, alert output(07-08 contact) is energized according to the setting of "ALo:XX".	
		ALo: A	If the load current is detected, alert output(07-08 contact) is energized. The alert threshold is no meaning for this operation. Refer to the Alert Operation Pattern.	이 항목은 공통접점 으로 사용하는 제품에만 가능한 기능임
		ALo: F	If the load current is higher than the alert threshold, alert output(07-08 contact) repeats open for 1s and close for 1s (flickering), The flickering starts from the motor starting. Refer to the Alert Operation Pattern.	
		ALo: H	If the load current is higher than the alert threshold, alert output(07-08 contact) is closed (holding) and remains closed until the load current decrease under the alert threshold. The alert output is blocked during motor starting. Refer to the Alert Operation Pattern.	
		ALo:to	If the accumulated running hour is more than the Running Hour threshold, the alert output repeats close for 1s and open for 1s.	
		ALo:uc	The alert output is used only for under current protection. If this mode is selected, a trip by an under current fault is signaled through alert output(07-08), instead of overload trip output(95-96 or 97-98).	
23	Reset	rt:E-r	Fault reset by a power cycle or by pressing the ESC button.	
		rt:H-r	Fault reset only by pressing the ESC button.	
		rt:A-r / Ar: 15. / Ar:20n	Fault reset by a auto-reset timer, Setting range of the timer : 0.5sec~20min. Also the fault can be reset by a power cycle or by ESC button.	
24	Reset Limitation	rn: 3	The maximum auto-reset number during 30 minutes in auto-reset mode. The auto-reset counter is stored in the non-volatile memory and is cleared by pressing ESC button when the counter reaches the limitation. To disable limitation, select "oFF". Setting range : oFF~5 times.	Ad: 1
25	Total Running Hour	-trh- / 033 ⟺	In this menu, toggle display, "-trh-" and the accumulated value, is activated. The accumulation starts from the installation and the user cannot clear the accumulated value. This display unit is 1 hour.	No parameter
26	Running Hour	--rh- / 033 ⟺	In this menu, toggle display, "--rh-" and the accumulated value, is activated The user can clear the accumulated value by selecting the running hour threshold to "rh:oFF". When motor stops This display unit is 0.1 hour (6 minutes). By selecting "ALo:to", the user can get the alert signal through alert output(07-08) when the accumulated value is more than the running hour threshold.	No parameter
27	Running Hour	rh: 10.	Threshold for alert output when the user selects "ALo:to". The unit is 10 hours and this menu is not displayed when the motor is starting or running. Setting range : 10~9990 hours, oFF	rh:oFF
28[*1)]	Communication	Ad:000	Modbus slave address. Range : 1 ~ 247.	Ad: 1
		bP:19.2	Setting for Communication speed Range : 1.2kbps, 2.4Kbps, 4.8Kbps, 9.6Kbps,19.2Kbps, 38.4Kbps .	bP:19.2
		Pr:Eun / Pr:odd	Parity setting Range : odd, even, non.	Pr:Eun
		Lt:oFF	Duration for communication loss detection. Displays alarm when no new communication data is received for the duration. If "oFF" is selected, no monitoring for communication channel is activated. Setting range : 1~999 sec, oFF	Lt:oFF
29	Test Trip	tESt	When this menu activated, OL trip signal and enabled EF trip signal is generated when (3s+ot) expires. The display shows "End" when the test is done. By pressing ESC, returns to the load current display mode. This menu is not displayed when the motor is starting or running. Before (3s+ot) expires, pressing ESC or motor starting or running blocks the test trip and return to the load current display.	No parameter
30	End	End	This shows the end of test trip. Test result is stored in the fault record.	No parameter

**1) This menu is only available in "C" Type.*
**2) These are applied to i3BZ & iFBZ only.*

Wiring Examples

3 phase line Diagram

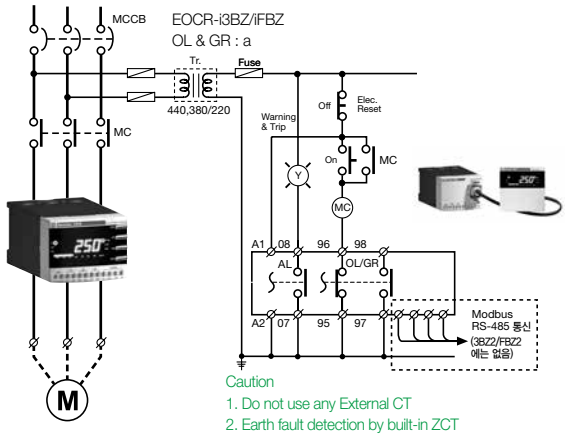

Caution
1. Do not use any External CT
2. Earth fault detection by built-in ZCT

FS를 oFF, OL & GR 발생시 – MC OPEN

3 phase line Diagram

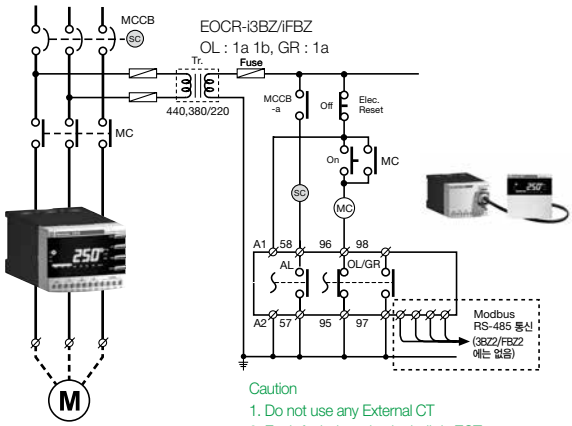

Caution
1. Do not use any External CT
2. Earth fault detection by built-in ZCT

FS를 oFF, OL 또는 GR 발생시 – MC OPEN

3 phase line Diagram

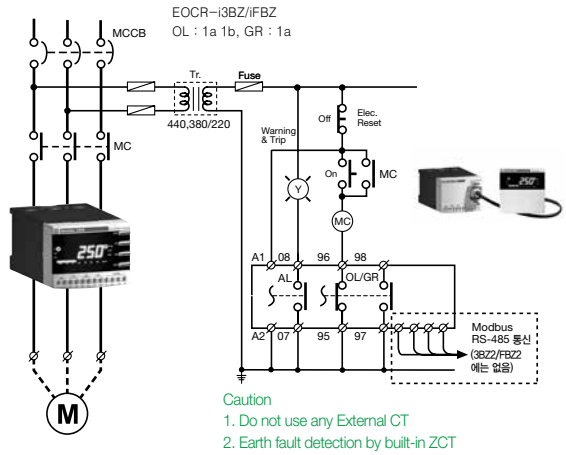

Caution
1. Do not use any External CT
2. Earth fault detection by built-in ZCT

FS를 oFF, GR 발생시 – MCCB Open Wiring

Single phase line Diagram

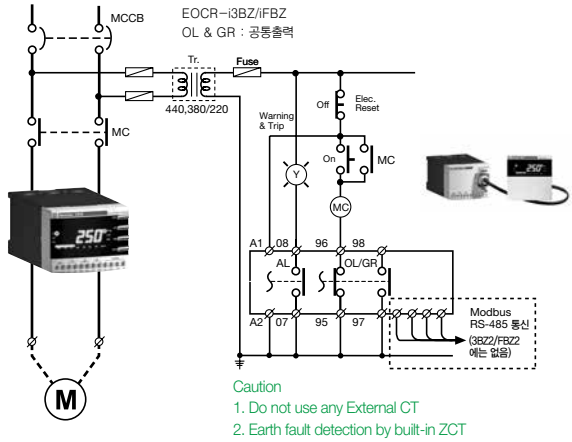

Caution
1. Do not use any External CT
2. Earth fault detection by built-in ZCT

FS를 oFF, OL & GR 발생시 – MC Open

Single line Diagram

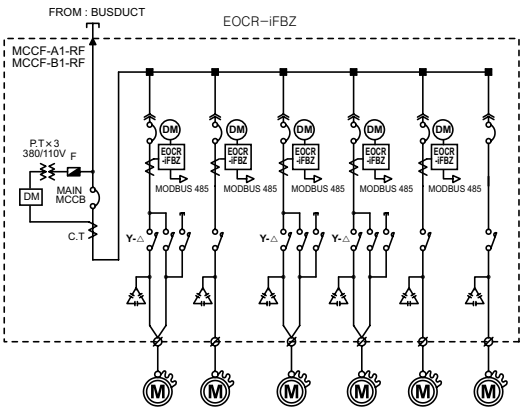

Single line Diagram

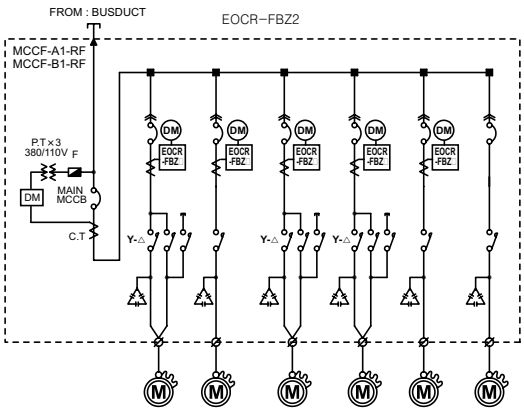

Dimensions

EOCR-i3BZ (Bottom Hole)

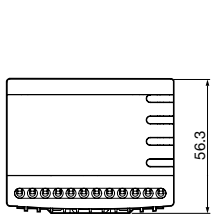

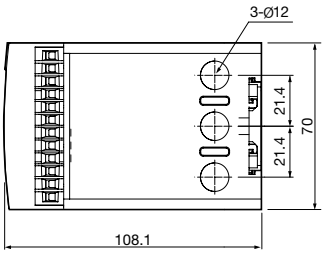

PANEL & DIN RAIL TYPE

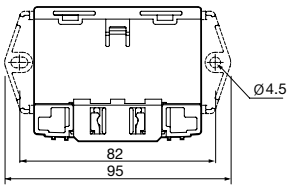

MOUNTING HOLE SIZE

EOCR-i3BZ (Teminal Type)

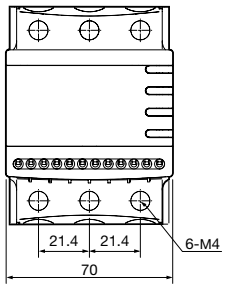

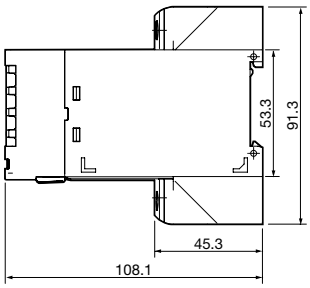

PANEL & DIN RAIL TYPE

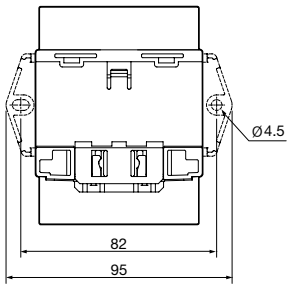

MOUNTING HOLE SIZE

EOCR-iFBZ (Bottom Hole)

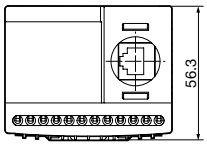

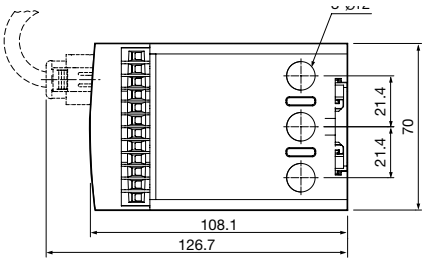

PANEL & DIN RAIL TYPE

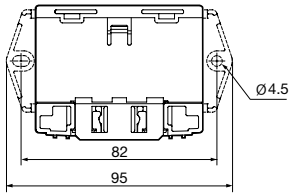

MOUNTING HOLE SIZE

EOCR-iFBZ (Teminal Type)

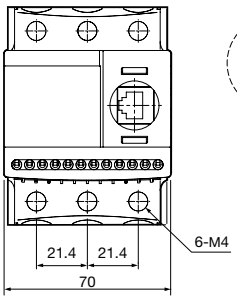

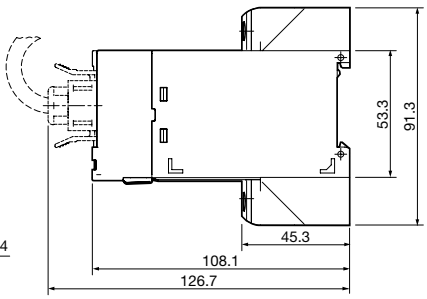

PANEL & DIN RAIL TYPE

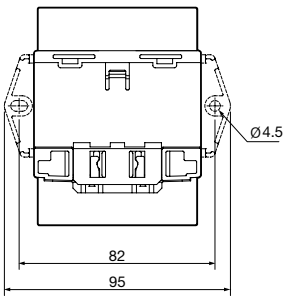

MOUNTING HOLE SIZE

EOCR-PDM

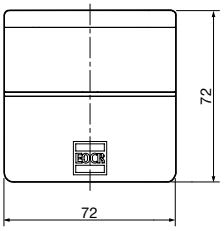

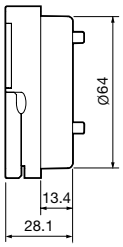

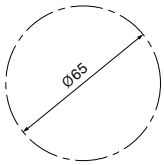

MOUNTING HOLE SIZE

Order Code

To order an EOCR-i3BZ

i 3 B Z – W R A U H L

❶ ❷ ❸ ❹ ❺

❶	Current Range	WR	0.5~80A
❷	Output relay	A	OL : 95-96 (NC output), 97-98 (NO output)
			GR : 57-58 (NO output)
		C	OL/GR : 95-96 (NC output), 97-98 (NO output)
			AL/UL/TO : 07-08
❸	Operating Power Supply/ FrequencyH3	B	DC/AC 24V(-15%, +10%)
		U	AC/DC 100~240V (-15%, +10%)
❹	Converter	H	Through bottom-hole
		T	Through screw-terminal
❺	Low frequency adaptation	L	For low system frequency (10Hz~100Hz)

To order an EOCR-3BZ2

3 B Z 2 – W R A U H L

❶ ❷ ❸ ❹ ❺

❶	Current Range	WR	0.5~80A
❷	Output relay	A	OL : 95-96 (NC output), 97-98 (NO output)
			GR : 57-58 (NO output)
		C	OL/GR : 95-96 (NC output), 97-98 (NO output)
			AL/UL/TO : 07-08
❸	Operating Power Supply/ FrequencyH3	B	DC/AC 24V(-15%, +10%)
		U	AC/DC 100~240V (-15%, +10%)
❹	Converter	H	Through bottom-hole
		T	Through screw-terminal
❺	Low frequency adaptation	L	For low system frequency (10Hz~100Hz)

To order an EOCR-iFBZ

i F B Z – W R A U H L

❶ ❷ ❸ ❹ ❺

❶	Current Range	WR	0.5~80A
❷	Output relay	A	OL : 95-96 (NC output), 97-98 (NO output)
			GR : 57-58 (NO output)
		C	OL/GR : 95-96 (NC output), 97-98 (NO output)
			AL/UL/TO : 07-08
❸	Operating Power Supply/ FrequencyH3	B	DC/AC 24V(-15%, +10%)
		U	AC/DC 100~240V (-15%, +10%)
❹	Converter	H	Through bottom-hole
		T	Through screw-terminal
❺	Low frequency adaptation	L	For low system frequency (10Hz~100Hz)

To order an EOCR-FBZ2

F B Z 2 – W R A U H L

❶ ❷ ❸ ❹ ❺

❶	Current Range	WR	0.5~80A
❷	Output relay	A	OL : 95-96 (NC output), 97-98 (NO output)
			GR : 57-58 (NO output)
		C	OL/GR : 95-96 (NC output), 97-98 (NO output)
			AL/UL/TO : 07-08
❸	Operating Power Supply/ FrequencyH3	B	DC/AC 24V(-15%, +10%)
		U	AC/DC 100~240V (-15%, +10%)
❹	Converter	H	Through bottom-hole
		T	Through screw-terminal
❺	Low frequency adaptation	L	For low system frequency (10Hz~100Hz)

To order a Cable

C A B L E – R J 4 5 – 0 0 1

❶ ❷

❶	Connector Type	RJ45	
❷	Cable Length	00H	0.5M
		001	1M
		01H	1.5M
		002	2M
		003	3M
		Others	Special order up to 400M

iEOCR-MME

Main Features

iEOCR-MME

- On/off function for local and remote
- Operating Mode: DOL, star-delta, inverter
- Built-in MODBUS RS-485 communication
- Control Mode: LOP, MCC, AUTO, COMM
- Suitable for inverter environment: Available for low frequency(5~200Hz)
- Enhanced monitoring function: Real-time monitoring at far distance (150m)
- Perfect protection by selecting inverse thermal time / definite time / inverse time
- Bar graph function: operating current to set current
- Record 3 latest fault: fault type fault time fault current of R.S.T phase
- Date & Time setting: YYYY/MM/DD/HH/MM/SS
- Limit restarting, operating hour saving functions
- 3-phase current and leakage current display (alternatively)
- 3-phase / single phase setting
- Security set-up: password function
- Setting and monitoring with PC: free PCON software
- Selectable by General/Ground Current with Extermal ZCT Ground Current with built-in ZCT
- Real Time Processing / Higher Precision

Protection Functions

Items	Operating Condition / Set-up Range	Operation Time
Over Current (oc)	Load current(In) exceeds threshold(Is) Setting Range : 0.5~100A(Def), 0.5~32A(Inv & th) 100	Definite(Def) : 0.2~120s Adjustable Inverse(Inv) & Thermal(th) : 1~30 Class
Under Current (uc)	Load current(In) less than threshold(uc) In <= uc uc should be less than oc Setting	oFF, 1~120s Adjustable
Phase Loss (PL)	max imbalance is more than 85% among 3 phase current, Enable or disable : Selectable	oFF, 0.5~5s Adjustable
Reverse Phase(rP)	Reversed phase sequence input on EOCR. Enable or disable : Selectable	Within 0.15s
Stall (Sc)	Active only in motor starting, In ≥ Stall threshold (Sc×OC). Setting Range : Adjustable 2~8 times of oc setting if Sc×OC doesn't exceed 250A	Immediately after D-Time elapsed
Jam	Active only in motor running, In ≥ Jam threshold (JA×OC). Setting Range : 1.5~8 times of oc setting if JA×OC doesn't exceed 250A	0.2~10s Adjustable
Unbalance (ub)	Current unbalance ≥ threshold 1~10s Adjustable. Setting Range : 10~50% Unbalance[%] = 100 × (Max phase current - Min phase current)/Max phase current	1~10s Adjustable
Earth Fault (EF)*1)	EF current(Ie) exceeds threshold(Ies) Setting Range : oFF, 0.03~10A	0.05~10s Adjustable (0.1~10s for MMED model)

**1) This function is not available for MMED model.*

Auxiliary Functions

Password	Password Secure configuration
3-phase / single phase setting	The selection enables application to 3-phase or single phase motor without urther setting
Communication	Communication Serial network communication for monitoring of metering, status, and fault history
Phase selection	Phase selection Select a Single-phase motor or 3-Phase motor
Total Running-Hour	Total Running-Hour Record of total running from installation which cannot be modified or cleared
Running-Hour	Running-Hour Running-Hour Accumulated running hour from preset point which can be cleared to zero, when motor stops
Fault History	Fault History Records for recent 3 faults each phase current which stored in a non-volatile memory
Limitation of autoreset attempt	Limitation of autoreset attempt Block auto-reset if the reset count exceeds the pre-set count within 30 minutes
Date/Time Information Setting	Seve date/time of failure to provide exacit time of moter failure

Control Function

Control Function	Description	Operating Conditions
Operating Mode	DOL	Direct on Line
	Y-D start	Y start time: 0.1~999 sec, Y-D switching time: 0.0~3 sec.
Control Mode	LOP	Local Operation Panel
	MCC (HMI)	Motor Control Center, Operation by OCU
	AUTO (PLC)	PLC, DCS automatic operation
	Network	Operation by RS-485 MODBUS communication

Communication Function

Item	Specification	Remark
Communication Protocol	Modbus RTU	
Communication Method	RS-485	
Baud Rate	1.2, 2.4, 4.8, 9.6, 19.2, 38.4 AUTO kbps	
Range	1.2km max.	Depend on the environment
Communication Line	Universal RS-485 Shielded Twist 2-Pair Cable	

Depend on the environment

Over current (A) setting range			Definite: 0.5~6A (05 selected), 5~100A (80 selected)
			Inverse/Inverse Thermal: 0.5~6A (05 selected), 5~32A (80 selected)
Under current (A) setting range			0.5 ~ oc (05 selected), 5 ~ oc (80 selected)
Overload Characteristics Curve			Definite (Def) / Inverse (Inv) / Inverse Thermal
Leakage ground current (A) setting range			oFF 0.03~2.5A (Lo selected), or 1.0~10A (Hi selected)
Operating Time Characteristics	Start-up delay		0~200s
	Definite time over current operating time		0.2~120s
	Inverse over current characteristics curve		1~30 Class
	Leakage ground current operating time		0.05 ~ 10s (0.1~10s for MMEB model)
	Leakage ground fault detection delay time at start-up		0~30s
	Auto reset time		0.5s~20min.
	Reset type		Manual (H-r) / Remote (E-r) / Auto (A-r)
Control Power	Rated Voltage		100~240VAC, 24VDC, 100~125VDC
	Allowable input voltage		85%~110% (of rated voltage)
	Frequency		50/60Hz
	Power consumption		Less than 7VA
Output Contact	Capacity		3A/250VAC Resistive.
	composition		NO output: O1,O2,O3
Display	7 Segment LED		Displays current measurement, failure information, and setting values
	Bar graph		Load ratio display (50 ~ 120%)
Communication			Modbus-RTU/ RS-485
Mounting			Embedded in panel (flush mounting)
Insulation Resistance	Between circuit and enclosure		DC500V 10㏁ over
	Between dielectric strength circuit and enclosure		2KV, 50/60Hz, 1 minute
	Between contacts		1KV, 50/60Hz, 1 minute
	Between circuits		2KV, 50/60Hz, 1 minute
Electrostatic Discharge(ESD)	: IEC61000-4-2 / IEC60255-22-2		Level 3 : Air Discharge : ±8KV, Contact Discharge : ±6KV
Radiated Disturbance	: IEC61000-4-3 / IEC60255-22-3		Level 3 : 10V/m, 80 ~ 1000MHz
Conducted Disturbance	: IEC61000-4-6 / IEC60255-22-6		Level 3 : 10V,0.15~80MHz
EFT/Burst	: IEC61000-4-4 / IEC60255-22-4		Level 3 : ±2KV, 1 Min
Surge	: IEC61000-4-5 / IEC60255-22-5		Level 3 : 1.2 x 50μs, ±4KV (0°, 90°, 180°, 270°)
Emission	: CISPR11 / IEC60255-22-26		Class A (Conducted and Radiated)
Operating Environment	Temperature	Storage	-40℃ ~ +85℃
		Operation	-20℃ ~ +60℃
	Humidity		30~85% RH (no condensate)
Dimensions	Main Body	EU	70W x 56.3H x 108.1D
	Display Device	OCU	108W x 74H x 38.6D
Weight			MMED : 295g, MMEB : 330g, MMEZ : 295g
			OCU : 180g, 1M cable : 55g

● Control Channel

		Input	Function	Selected Control Channel			
				LOP	AUTO	MCC	COMM
With LOP (AUTO is available for 2-Wires only)		**I1**	**RUN**	OFF → ON	ON	Ignore	
			STOP	N/A	OFF		
		I4	**STOP**	OFF less than 2 sec	N/A	N/A	
			LOCAL S/W	ON	ON	ON	
			REMOTE S/W	OFF above 2 sec	OFF	OFF	
Without LOP	**AUTO-3 Wire**	**I1**	**RUN**	N/A	OFF → ON	Ignore	
		I4	**STOP**	N/A	OFF		
	AUTO-2Wire	**I1**	**RUN**	N/A	ON	Ignore	
			STOP	N/A	OFF		
		I4		N/A	Ignore		

Time -current characteristic curve.

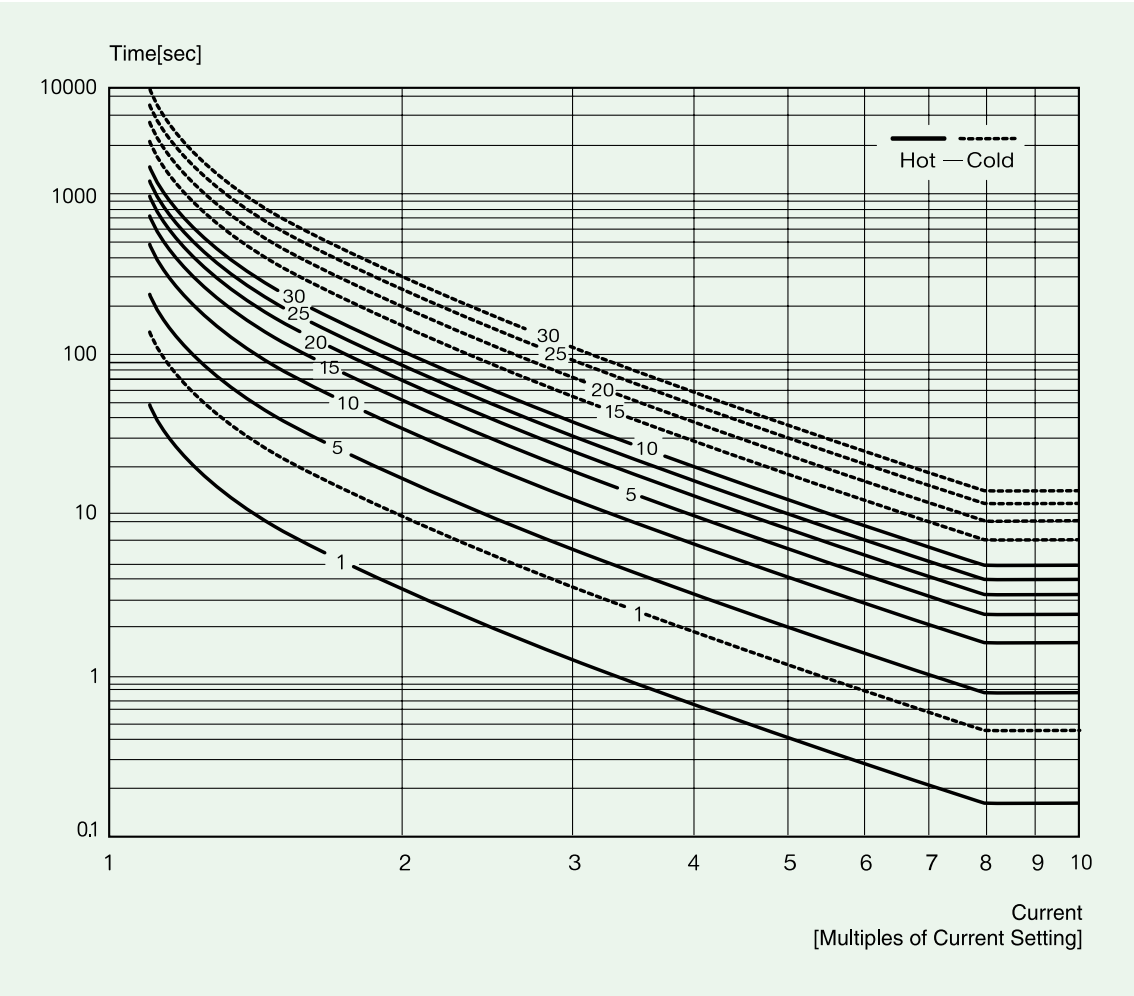

Table 1. Inverse characteristic (0.5~32A)

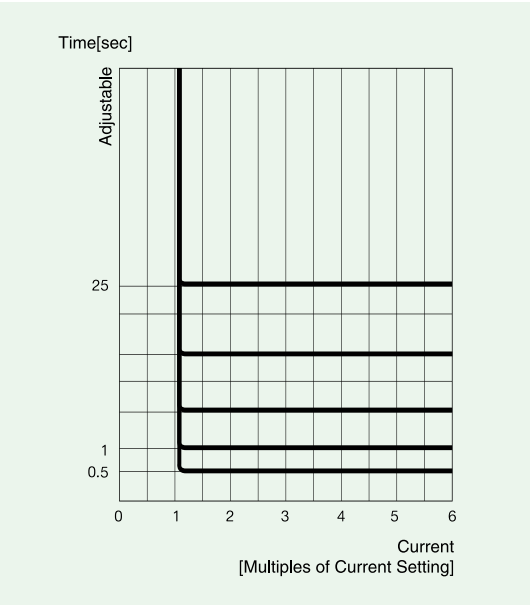

Table 2. Definite time characteristics

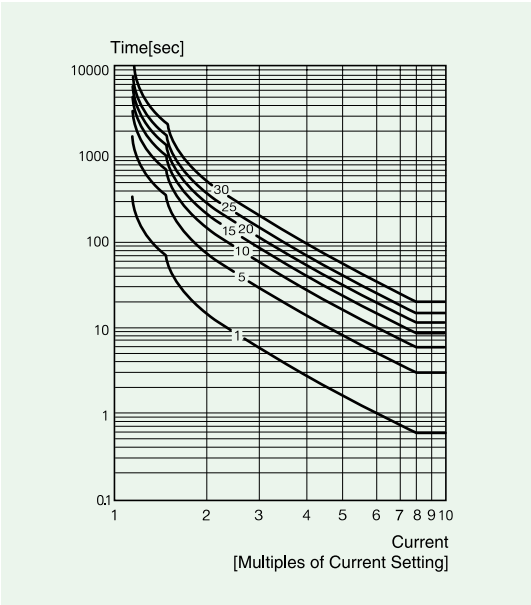

Table 3. Inverse thermal time characteristics (0.5~32A)

Over current and time setting tips

- **Over current**

Setting tips in definite TCC mode

1. Over current threshold (OC) :
   - Set the OC at the rating current of a motor. To protect machine together, it is recommended to set at 110~120% of the actual normal operating current.
2. Starting delay time (D-time)
   - Set an expected start-up time to reach the normal current of load. If you do not know it, set to 15sec at first and start-up the motor to measure the time to reach the normal operation current by monitoring the displayed current and then set the time at 2 sec longer than the time measured. For a Y-D start, it's better to set time 2 sec longer than the preset time of the Y-△ change timer.
3. Operation time (O-time) : Set the trip delay time which activates and counts down under a fault condition.

Configuration tips when Inverse or Thermal Inverse characteristic is necessary

1. Overcurrent threshold (oc) :
   - This value is the basic current and from the point of 105% of oc, the inverse curve starts. Usually oc is set to the rated current of the motor.
2. Starting delay time (D-time)
   - Usually this value is set to zero. With zero D-time and Inverse is selected, first the cold curve is applied until the load current drops down the oc value, and then the hot curve is applied.
   - But if the user wants fast trip with very high current during starting, set D-time other than zero. With non-zero D-time, the enabled STALL funtion detects very high current immediately after the D-time elapsed.
   - If the Inverse is selected, and D-time is non-zero, the Inverse function is blocked during starting, and the hot curve is applied after D-time elapsed.
   - If Thermal Inverse is selected, it detects overcurrent regardless of D-time. That is, thermal inverse is activated during motor starting as well as motor running.
3. Operation time (O-time) :
   - When Inverse or Thermal Inverse is selected, O-time setting determines the trip class. nEOCR supports trip class from 1 to 30. Refer to the graphical representation of Inverse or Thermal Inverse to check trip time.

Alert Operation Pattern

Do use this function by OL/GR common output.

Running Stage / ALo Setting	Starting	Normal Operation	Higher than the preset Alert value	Trip
Aux "A"				
Flicker "F"			1sec	
Hold "H"			1sec	

Display Layout

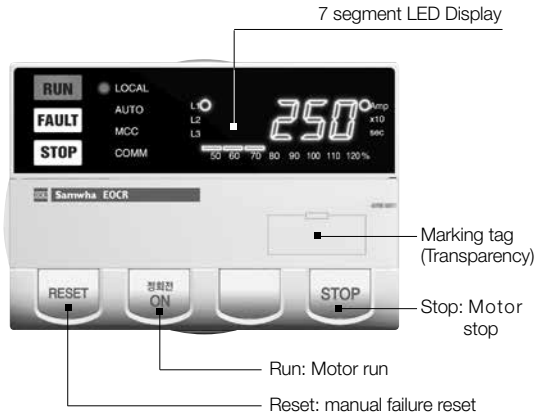

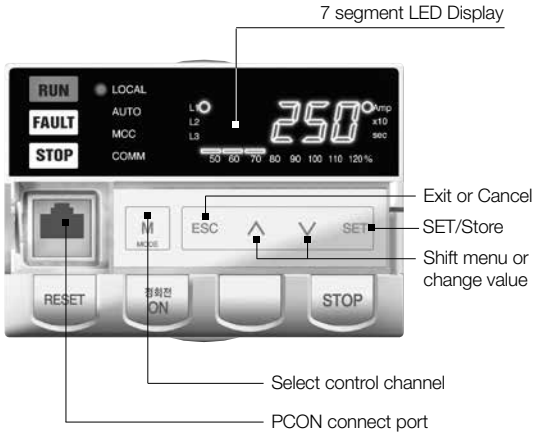

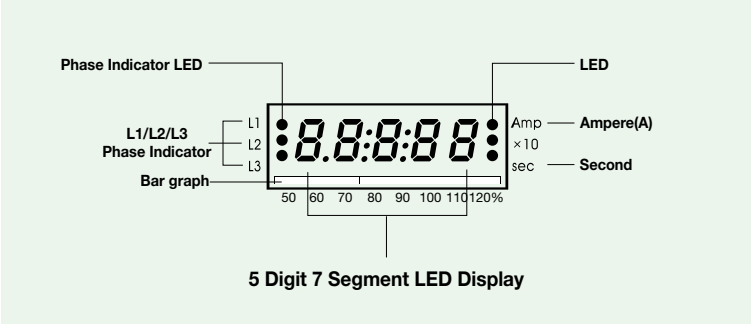

3 phase currents (In) and the leakage current are displayed every 2 seconds in sequence.

Bar graph

- it shows the load factor to OC setting value by %
- % value = (running current/setting current) × 100%
- Min scale is 50%
- if the setting value is the rated motor current, it shows the load factor of the motor.

Current disply

- Shows the highest current among three phases for oc, Stall, Jam trips.
- Shows the lowest current among three phases for uc, Ub trips.
- Shows the lost phase for PL.
- Shows the phase and the current during running.

Amp: Ampere. LED is on when a current display.

X10: Shows the unit changed to 10 times.

Sec: Second. LED is on when a time display.

3-Phase Digital Ammeter Function

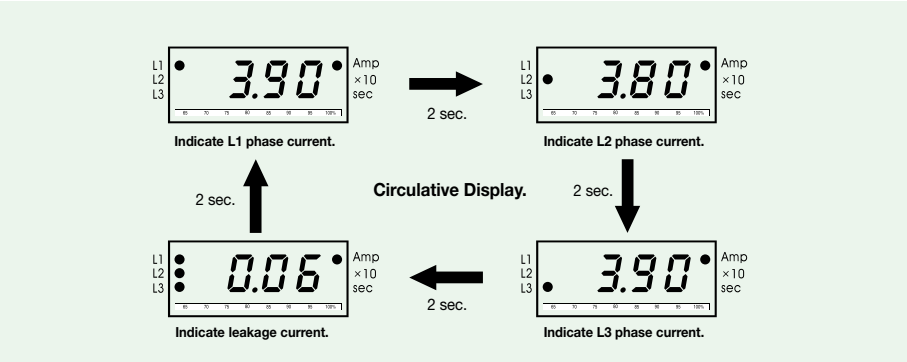

※ Indicate leakage current is not available for MMED model.

Button and Setting Sequence

Button	Description of Function
∧∨	Shift menu or change setting value
SET	Select, save or open submenu
ESC	Return to previous or parent menu
M MODE	Select motor control channel
RESET	Manual rest of failure
정회전 ON	Motor run in normal direction
STOP	Motor stop

※ FAULT menu shows from the latest to oldest failures. Use buttons to search failure data. While the latest failure data is displayed, 120% of the load ratio LED is lit.
110%, 120% LED will be lit while the earlier failure data are displayed. For the oldest failure data, 100%, 110%, 120% LED are lit. Pressing ESC during failure data display will return to the menu mode.

Sequence and Menu for Setting Functions

● System Configuration

Display	Description	Setting Range
PW:000	Secure configuration	000 999 (000 for no password setting)
Ph: 3Ph	3 phase or single phase	3ph, 1ph
r9: 05	Base load current range	05, 80 (05-> oc:0.5 -6A, 80-> oc:5-100A)
EF:Lo	Base earth leakage fault current range	Lo, Hi (Lo : 0.03-2.5, Hi : 1.0 - 10.0A)
ct:non	External CT ratio, select cuS for separate configuration of primary, secondary and multiple passes	Non, 2t, 3t, 4t, 5t, cuS (ctse:1, ctse:5, ct:10~3000, PaS:1~5)
LoP: yE	LOP exist or not	yE, no
Aut:no	AUTO(PLC or DCS) exist or not	yE, no
nEt:no	Enable control by communcation	yE, no
Acc: yE	Enable control by OCU	yE, no
StP:no	Enable global stop from OCU	yE, no
oP: doL	operation mode, select DOL,YD,Inverter or By pass	doL, y-d, Inv, b-P
Aut:2	Select Auto-2wire for maintained contact or Auto-3wire for momentary contact	2, 3
out:SE	Output type of OL and GR, select common or separate	SE, Co
Fr9:60	System fundamental frequency	50, 60
buP: yE	Enable bump(stop) between control channel transfer	yE, no
LF9: no	If yes, measurement starts from 5Hz	yE, no
nAc:no	Enable write access to network for configuration	yE, no

※ *During the change of system related item settings, protection and control functions are disabled. Press SET to save the new setting and ESC to return to normal mode.*

● Protection and Control Function Setting

Display	Description	Setting Range
rP:oFF	Reversed phase detection	On, oFF
tcc:dE	Time-current characteristic (none, definite, inverse, thermal inverse)	no, dE, In, th
oc: 5.0	Over current threshold	dE: 0.5 – 6.0 or 5.0 – 100 In/th: 0.5 – 6.0 or 5.0 – 32
dt: 5	Starting delay	0 – 200
ot: 5	Over currentent duration	0.2 – 120
cLS: 5	TCC class for inverse	1 – 30
uc:oFF	or thermal inverse	oFF, 0.5 – oc or 5.0 – oc
ut: 5	Under current threshold	0.5 – 120

Sequence and Menu for Setting Functions

● Configuration of control and protection

Display	Description	Setting Range
Ec: 3.0	Earth leakage threshold	oFF, 0.03 – 2.5 or 1.0 – 10.0
Et: 1	Earth leakage duration	0.05 – 10
Edt: 0	Starting delay of earth leakage	0 – 30
PL: on	Enable phase loss	on, oFF
PLt: 2	Phase loss duration	0.5 – 5
Ub: 50	Unbalance threshold	oFF, 10 – 50
Ubt: 5	Unbalance duration	1 – 10
Sc: 4	Stall threshold (multiples of oc)	oc x Sc < 45 (05 selected) oc x Sc < 240 (80 selected)
JA: 4	Jam threshold (multiples of oc)	oc x JA < 45 (05 selected) oc x JA < 2400 (80 selected)
Jt: 5	Jam duration	0.2 – 10
Yt: 3.0	1 step time in YD starter	0.1 – 999
tt: 1.0	Transition time in YD starter	0 – 3
ALo:no	Alarm output type	no, A, F, H, to, uc
AL: 50	Alarm threshold (% of oc)	50 – 100
rt:H-r	Reset type (manual,remote,auto)	H-r, E-r, A-r
Ar: 5	Auto reset timer	0.5 – 20n
rn:oFF	Limit of auto reset in 30 minutes	oFF,1-5
-trH-	Total running hour from installation	0 – 99999
--rH-	Running hour	0 – 99999
rH: 0	Accumulated operating hours alarm output reference time	0 – 9990
Yr: 09	Year, 2009 - 2099	09-99
Mon: 5	Month	1-12
dd: 31	Day	1-31
hh: 23	Hour	00-23
Mn: 51	Minute	00-59
SEc: 59	Second	00-59
Ad: 1	Modbus slave address	1 – 247

Sequence and Menu for Setting Functions

● Configuation of control and protection

Display	Description	Setting Range
bP: 192	Baud rate (bps)	1.2, 2.4, 4.8, 9.6, 19.2, 38.4, auto
Pr:Eun	Parity, none, even, odd	non, even, odd
Lt: 10	Communication Loss operating time	1 - 999
Pcn:no	Open PCON pore	yE, no
d9n:YE	Run/Stop command diagnosys	yE, no
FAuLt	Fault records	3 records
hLS:YE	Check OCU connection	yE, no
rc: 0	Rapid cycle time	0 – 999
clr:th	Clear thermal capacity	Sequence: SET Blink SET
tESt	Output test	SET to run, press RESET to return.
End	End of output test	

Fault Indication

When the relay is tripped. the cause and current of the trip is displayed, The cause and current values of the phases for the lastest 3trip are stored and available for search. search is available during stop or operation.

Trip Cause	Display	Description
Over current	oc: 3.6	Overcurrent with 3.6A at R-phase
Phase Loss	PL -r	Phase loss at R-phase
Reversed Phase	-rP-	Phase reveral
Stall at starting	St: 35.0	Stall with 35.0A at S-phase immediately after at expires
Jam at running	JA: 15.8	Jam with 5.8A at T-phase
Unbalance	Ub: 4.2	Unbalance detected
Under current	uc: 1.6	Under current with 1.6 at T-phase
Earth leakage	Ec: 0.06	Earth leakage with 0.06A detected
Network communication loss	nLoS	Network communication loss
Stuck button	btn	Button stuck in OUC or EU
Run command	runEr	NO current flowing after is from a run command
Run checkback error	cbrun	Avevage load current for 0.5s is zero after a run command with following a stop command

Cause of Trigger Indication and Check Method

Trip Cause	Display	Description
Stop command error	StPEr	Current flowing after is from a stop command
Stop checkback error	cbStP	Average load current is not zero for 0.5s after a stop command with no following a run command
External fault intiagted	EtFlt	Fault intiated by network communication
Limit of auto-reset reached	rn:FuL	Number of auto-reset in 30minutes exceeds the limit

I/O Terminal layout

DC Type

MMEZ-WRBx

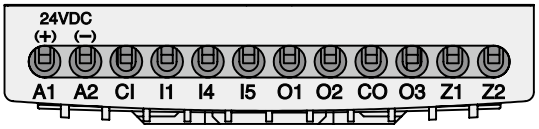

MMEB-WRBx / MMED-WRBx

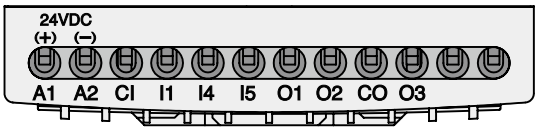

MMEZ-WRGx

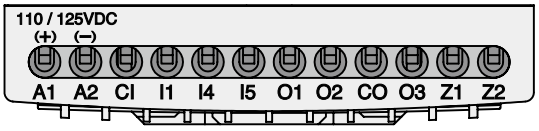

MMED-WRGx / MMEB-WRGx

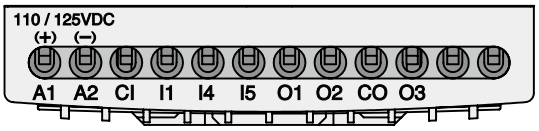

AC Type

MMEZ-WRUx

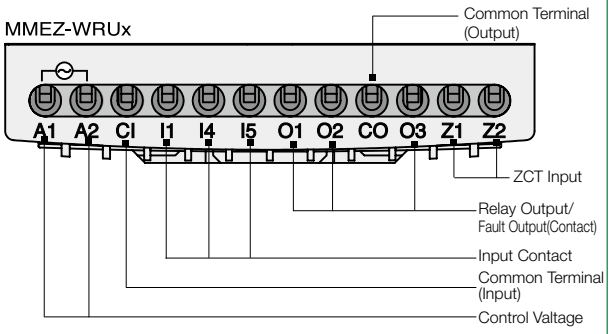

MMED-WRUx / MMEB-WRUx

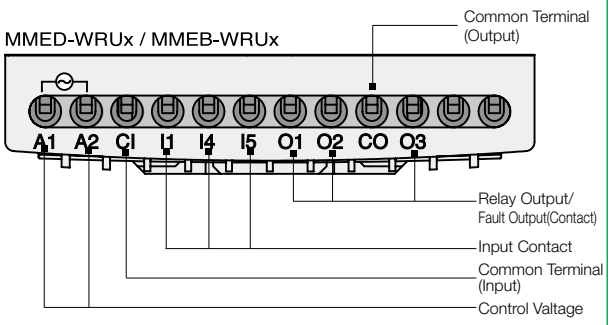

Wiring Diagram (Exemplary)

DOL starter

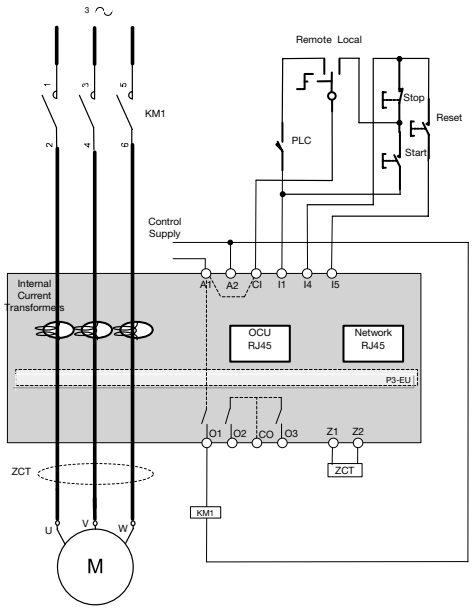

*The control power must be insulated.

Y-D starter

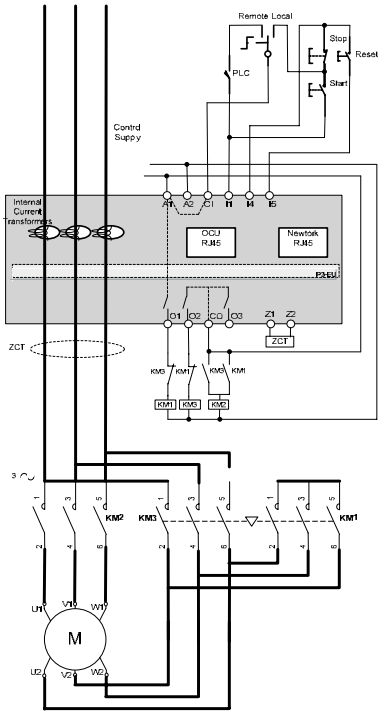

*The control power must be insulated.

Inverter

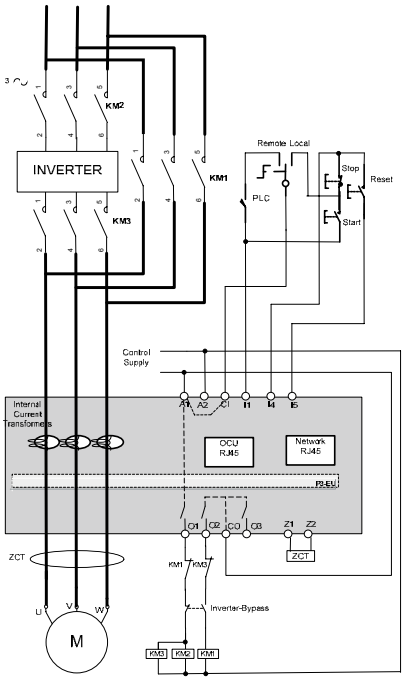

*The control power must be insulated.

Dimensions

MMEx-xxxT

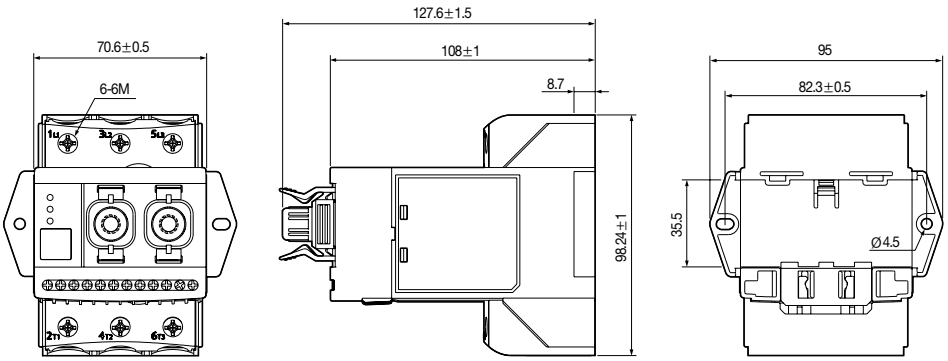

PANEL & DIN RAIL TYPE

MOUNTING HOLE SIZE

MMEx-xxxH

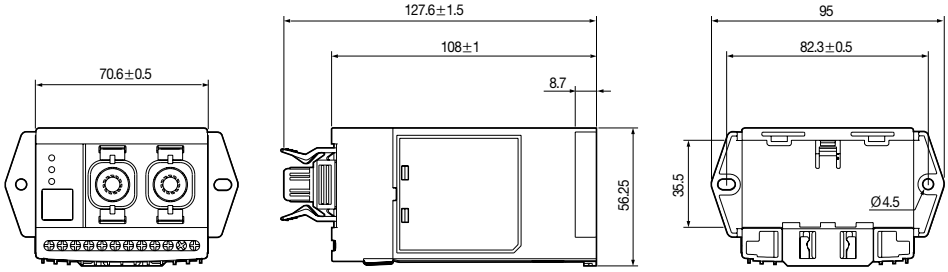

PANEL & DIN RAIL TYPE

MOUNTING HOLE SIZE

EOCR-OCU

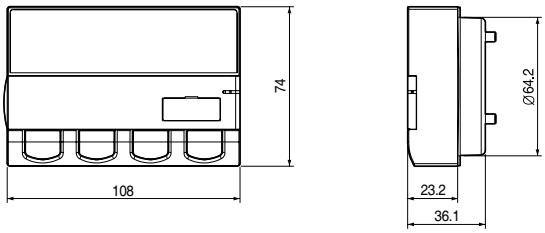

iEOCR-MME

How to order

For ordering iEOCR-MMED;

M M E D – W R U H

❶ ❷ ❸ ❹

❶	**Product Type**	**ED**	General type
		EB	External ZCT
		EZ	ZCT excluded
❷	**Current Range**	**WR**	0.5 ~ 100A
❸	**Operating Power / Frequency**	**B**	DC 24V
		U	AC 100~240V(50/60Hz)
		G	DC 110 ~125V
❹	**CT type**	**H**	Bottom-Holl type
		T	Terminal type

For ordering cable;

C A B L E – R J 4 5 – 0 0

❶ ❷

❶	**Cable conection**	**RJ45**	
❷	**Cable length**	**00H**	0.5 ~ 100A
		001	1M
		01H	1.5M
		002	2M
		003	3M
		Others	Order specification (max. 150m)

EOCR-iSEM

Main Features

EOCR-iSEM

- Monitors active/reactive power and electric energy (integrated)
- Records fault waves (200ms): Records 3-phase current and 3-phase voltage, and saves the data
- Measures electrical energy through 4~20mA output contacts (+, -)
- Motor insulation status check: Can select from standard insulation resistances of 1MΩ, 5MΩ, and 10MΩ, and diagnose if it is higher or lower than the reference value (diagnosable while motor has stopped running)
- 3-phase current measurement: 0.5~100A with the use of a built-in CT, 100~960A with the use of an external CT
- Allows earth fault protection with the built-in ZCT without having to connect to an external ZCT (0.03~10A)
- The date and time can be checked during a power outage with the Date/Time settings (y/m/d/h/m/s)
- Various protection methods: Definite, Inverse, and Thermal Inverse
- Protects against earth fault current and short-circuit simultaneously (50msec)
- Communication function: MODBUS RS-485
- Records information of the last 3 faults: Fault type, fault current, and fault date/time
- Security settings function (password function)
- Bar Graph display function: Capable of checking the ratio of operating current vs set current
- Restart limit function, operation time setting and display
- Provides software that enables the operator to perform setting and monitoring through a PC

Protection Functions

Protected Items		Operation Conditions & Setting Range	Operation Time
Electric Current Element	Over Current	Operates if electrical current higher than the set current continues over the operation time (ot). Over current Definite: 0.5~100A Inverse/Thermal Inverse: 0.5~60A	Definite: Can be set from 0.2~120 sec, Thermal Inverse/Inverse: 1~30 Class
	Under Current	Operates if electrical current lower than the set current continues over the operation time (ut). Factory setting up to 0.5~oc set value or less	Definite: Can be set from 0.5~120 sec (operates in Definite even if Inverse is selected)
	Phase Loss	Operates if the phase-to-phase current deviation is 85% or more. On/Off selectable.	Can be set from 0.5~5 sec
	Stall	Operates if electrical current higher than the set current at the time the motor is running continues beyond the startup delay time (dt). Stall is applied only if a motor starts, and is set as a multiple of the over current (oc) set value. Sc value can be set when oc × Sc <= 500A or less.	Within 0.5 sec after D-Time Does not operate if D-Time is set to "0"
	Jam	Operates if the electric current higher than the set current continues over the operation time (St) due to a rapid load increase during motor operation. JA value can be set when oc × JA <= 500A or less.	Can be set from 0.2~10 sec (operates in Definite)
	Unbalance	Operates if the phase-to-phase current deviation unbalance rate is over the set value. Can be set from 10~50%. Unbalance rate=(max. phase current - min. phase current) / max. phase current x 100%	Can be set from 1~10 sec
	Reverse Phase	Operates if the sequence of current phase is reversed. On/Off selectable.	Within 0.15 sec
	Earth fault current *1)	Operates if an earth fault current higher than the value of earth fault current set with zero-phase current detected by ZCT continues over the operating time (Et). oFF, 0.03~2.5A (when EF: 2.5 is selected) or 1.0~10A (when EF: 10 is selected)	Can be set from 0.05~10 sec (External) Can be set from 0.1~10 sec (Internal)
	Earth fault current *1)	Operates if the earth fault current higher than the set earth fault current is entered. SH value can be set when oc × SH <= 500A or less.	Within 0.05sec
Voltage Element	Over Voltage	Operates if the voltage higher than the set voltage continues over the operation time (ovt). Can be set from 101~115% of the nominal voltage (110~690V)	Can be set from 0.2~30 sec
	Under Voltage	Operates if a voltage lower than the set voltage continues over the operation time (uvt). Can be set from 70~99% of the nominal voltage (110~690V) (operates at 80% or higher of the nominal set voltage)	Can be set from 0.2~30 sec
	Voltage Phase Loss	Operates if the phase-to-phase voltage deviation is 38% or more. On/Off selectable.	Can be set from 0.1~30 sec
	Voltage Unbalance	Operates if the phase-to-phase voltage unbalance rate is greater than the set value. The unbalance rate, which can be set from 3~15% = (max. difference between phase-to-phase voltage and average phase-to-phase voltage) / (average phase-to-phase voltage) x 100%	Can be set from 0.2~20 sec
	Reverse Phase	Operates if the sequence of pull-in voltage is reversed. On/Off selectable.	Within 0.15 sec
Electric Power Element	Overpower	Operates if power higher than the set power continues over the operation time (opt). Can be set from 20~800% of the nominal voltage (0.1~999kW) (does not operate during motor operation)	Can be set from 1~100 sec
	Low Power	Operates if voltage lower than the set voltage continues over the operation time (upt). Can be set from 20~800% of the nominal voltage (0.1~999kW) (does not operate during motor operation)	Can be set from 1~30 sec
	Overpower Factor	Operates if a power factor higher than the set power factor continues over the operation time (oft). Can be set from 0~100% (does not operate during motor operation)	Can be set from 2~30 sec
	Low Power Factor	Operates if a power factor lower than the set power factor continues over the operation time (uft). Can be set from 0~100% (does not operate during motor operation)	Can be set from 1~30 sec

**1) This function is not available in iSEMD products.*

Secondary Functions

Function	Description
Password Setting	Allows you to set a password so that no one except the manager can change the setting.
3-phase/Single-phase Selectable	Can be used on 3-phase or single-phase motor based on the manager's selection, without any further operations.
Operation Characteristics Selection	Definite/Inverse/Thermal Inverse can be selected and used depending on the motor usage environment.
Earth Fault Operation Delay Time Setting *1)	Allows you to set a delay time for earth fault operation during operation to prevent an earth fault malfunction caused by operating current or harmonic waves occurring at the time of start-up.
Short-circuit Operation Delay Time Setting *1)	Allows you to set a delay time for short-circuit operation during operation to prevent a short-circuit malfunction caused by operating current or harmonic waves occurring at the time of start-up.
Analog (+, -) Output Setting *1)	With LC selected, analog output of 4~20mA can be used. With PS selected, it is possible to remotely measure electric energy through metering pulse.
Start Cycle Setting	The motor status is determined by comparing the start delay time (dt) set by the user with the current value of the motor. If the motor is set to start with the Star-Delta setting, current that falls to the Off level or below while being converted from Star to Delta will be ignored, and the motor's state will be determined as a starting state.
Selecting Fail Safe	This is an optional function that can be used to check the operating power supply of EOCR and faults on EOCR.
Alert Function Selection	This function allows the prevention of trip by generating a pre-alarm output before being operated by over current. A user may choose his or her preferred alarm output behavior from the list on the table of alert output behaviors.
Insulation Resistance Value Selection *1) *2)	Allows you to diagnose the motor insulation status when the motor stops, and the reference value can be set to 1MΩ, 5MΩ, or 10MΩ.
Selecting Reset Method	Can choose from manual/auto/electrical reset.
Operation Time Setting	An alert output is generated if cumulative operation time exceeds the time set for user's maintenance. Time can be set from 1~9990 (in hours).
Saving Total Operation Time	The total operation time is accumulated every time the motor operates, and the hours of use until the moment will be displayed. The user cannot reset this value because it can be reset in the manufacturing process only. The max. display time is 99999, and beyond this value, it starts to accumulate from 0 all over again.
Date/Time Setting	Allows you to accurately identify the time of motor failure by saving the date and time of the fault.
Restart Limit Function	Limits the number of attempts to reset the motor within 30 minutes if auto reset is enabled.
Fault Wave Record Save (can only be checked through communication)	Fault wave record saves the sample values during 200ms for 3-phase current and voltage inputs when a fault occurs. The sampling is processed in 1ms increments. The data (70%) in the first half of the fault wave record are sample values before the trigger, while 30% in the second half shows the sample values after the trigger.
Self Test Function	It is possible to use the self-test function under the condition in which the load current is not supplied to the motor. This function is executed by selecting the "TEST" menu. The self test function counts down the over current operation duration time (ot) during which the Watchdog and Ram check are simultaneously tested.
Checking Communication Status	Generates an alert if there is no communication during the time set by the user after checking the communication status between external PLC/DCS and iSEM. Time can be set from 1 to 999 sec.

**1) This function is not available in iSEMD products.*
**2) This function is not available in iSEMZ products.*

Communication Function

Items	Specification	Notes
Communication Protocol	Modbus RTU	
Communication Method	RS-485	
Communication Speed	1.2, 2.4, 4.8, 9.6, 19.2, 38.4kbps	
Communication Distance	Max. 1.2kM	Depends on usage environment
Communication Line	Universal RS-485 Shielded Twist 2-Pair Cable	

Specifications

Over Current Setting Range (oc)		Definite: 0.5~100A Inverse/Thermal Inverse: 0.5~60A
Under Current Setting Range (uc)		Under the set value of 0.5~oc or less, or Off
Overload Characteristic Curve (tcc)		Definite (Def)/Inverse (Inv)/Thermal Inverse (th)
Leakage Earth Fault Current Setting Range (Ec)		Off, 0.03~2.5A (when 2.5 is selected) or 1.0~10A (when 10 is selected)
Multiple of Short-circuit Current Setting (SH)		2~50 times (SH value can be set when oc × SH <= 500A or less)
Stall (Sc)		2~8 times (Sc value can be set when oc × Sc <= 500A or less)
Jam (JA)		1.5~8 times (JA value can be set when oc × JA <= 500A or less)
Current Operation Time Characteristics	Start Delay Time (dt)	0~600s
	Over Current Operation Time (Definite, ot)	0.2~120s
	Over Current Characteristic Curve (Inverse, cls)	1~30 Class
	Under Current Operation Time (Definite, ut)	0.5~120s
	Leakage Earth Fault Current Operation Time (Et)	0.05~10s (External), 0.1~10s (Internal)
	Leakage Earth Fault Delay Time at Start-up (Edt)	0~30s
	Short-circuit Current Operation Time	Within 0.05s
	Short-circuit Delay Time at Start-up (Sdt)	0~20s
	Jam Operation Time (Jt)	0.2~10s
	Phase Loss Operation Time (Plt)	0.5~5s
	Unbalance Operation Time (Cut)	1~10s
	Reverse Phase Operation Time	Within 0.15s
	Auto Reset Time	0.5 sec~20 min
	Reset Type	Manual (H-r)/Remote (E-r)/Auto (A-r)
Over Voltage Setting Range (ov)		101~115% (Nominal Voltage: 110~690V)
Under Voltage Setting Range (uv)		70~99% (Nominal Voltage: 110~690V)
Voltage Operation Time Characteristics	Over Voltage Operation Time (ovt)	0.2~30s
	Under Voltage Operation Time (uvt)	0.2~30s
	Phase Loss Operation Time (Vlt)	0.1~30s
	Unbalance Operation Time (Vut)	0.2~20s
	Reverse Phase Operation Time	Within 0.15s
Overpower Setting Range (op)		20~800% (Nominal Power: 0.1~999kW)
Low Power Setting Range (up)		20~800% (Nominal Power: 0.1~999kW)
Power Operation Time Characteristics	Overpower Operation Time (opt)	1~100s
	Low Power Operation Time (upt)	1~30s
Overpower Factor Setting Range (of)		1~100
Underpower Factor Setting Range (uf)		1~100
Power Factor Operation Time Characteristics	Overpower Factor Operation Time (oft)	2~30s
	Underpower Factor Operation Time (uft)	1~30s
Control Power	Rated Voltage	100~240VAC, 24VDC
	Frequency	50/60Hz
	Power Consumption	8VA or less
System Voltage		3-phase, AC 110~690V, 50/60Hz
Output Contact	Capacity	3A/250VAC Resistive.
	Configuration	Over Current: 1a1b, Earth Fault Current: 1a, Short-circuit Current: 1a, Alert: 1a
Display Function	7-segment LED	Displays current, voltage, earth fault current, active/reactive power, electric energy, operation time, total operation time, power factor, fault cause, set value, and set items
	Bar graph	Displays load factor (65~100%)
Communication Method		Modbus-RTU/ RS-485
Current Loop Communication		Converts and outputs the max. phase current of the 3-phase current to 4~20mA
Attachment Method		Embedded Panel (Flush Mounting)
Insulation Resistance	Between the circuit and case	DC500V 10㏁ or higher
	Between the insulation withstanding voltage circuit and case	2KV, 50/60Hz, 1 min
	Between contacts	1KV, 50/60Hz, 1 min
	Between circuits	2KV, 50/60Hz, 1 min
Electrostatic Discharge (ESD)	: IEC61000-4-2 / IEC60255-22-2	Level 3: Air Discharge: ±8KV, Contact Discharge: ±6KV
Radiated Disturbance	: IEC61000-4-3 / IEC60255-22-3	Level 3: 10V/m, 80~1000MHz
Conducted Disturbance	: IEC61000-4-6 / IEC60255-22-6	Level 3: 10V, 0.15~80MHz
EFT/Burst	: IEC61000-4-4 / IEC60255-22-4	Level 3: ±2KV, 1 Min
Surge	: IEC61000-4-5 / IEC60255-22-5	Level 3: 1.2 x 50μs, ±4KV (0°, 90°, 180°, 270°)
Emission	: CISPR11 / IEC60255-22-26	Class A (Conducted and Radiated)
Usage Environment	Temperature Storage	-40℃~+85℃
	Operation	-20℃~+60℃
	Humidity	30~85% RH (with no dew condensation)
Dimensions	Main body EU	90.3W x 52.1H x 108.1D
	Display sPDM	72W x 72H x 28.1D
Weight		iSEMD: 422g, iSEMZ: 450g, iSEMM: 454g
		sPDM: 125g, 1M cable: 55g

Uses the Over Current Operation Time Characteristic Curve of the iEOCR-MME Catalogue

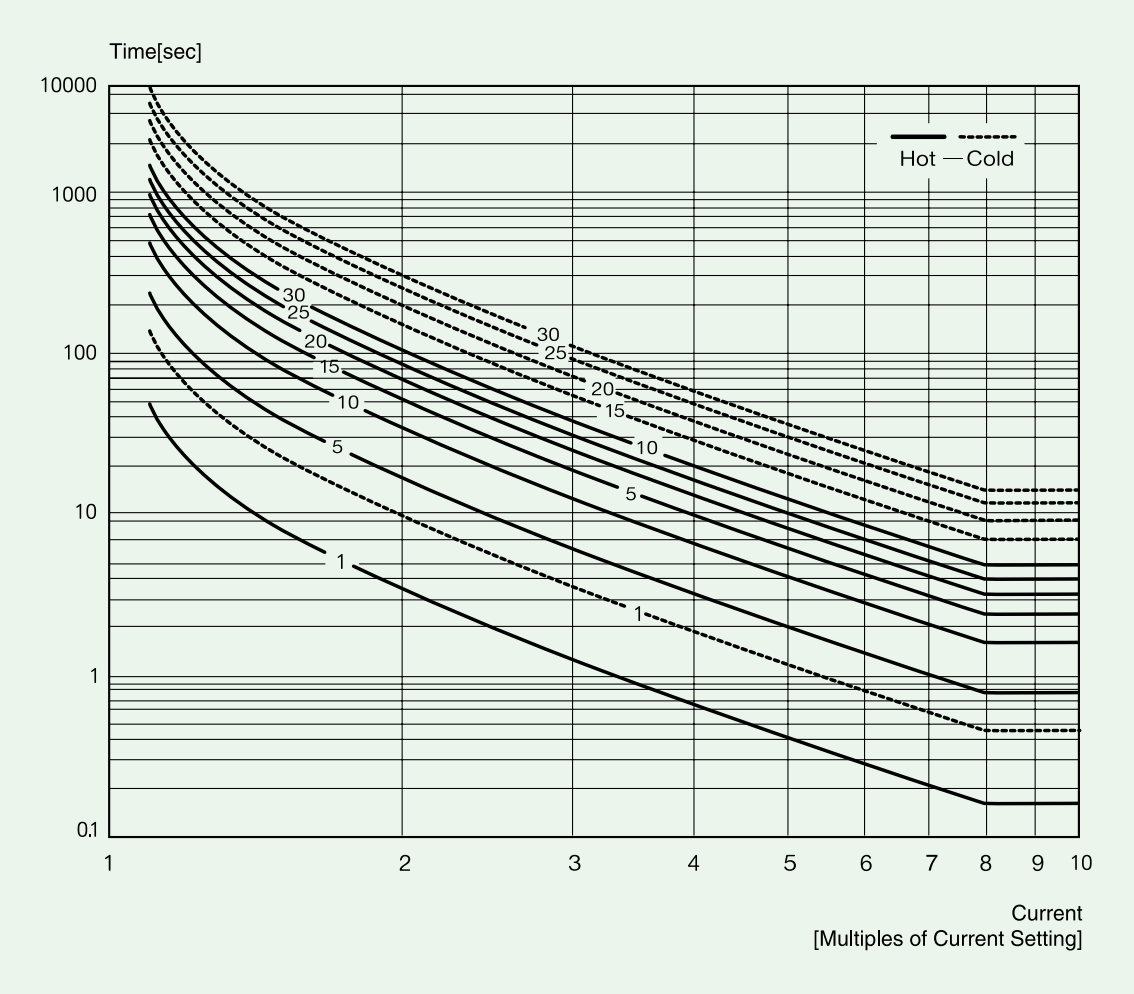

Table 1. Over Current Protection Inverse Operation Characteristics (0.5~60A)

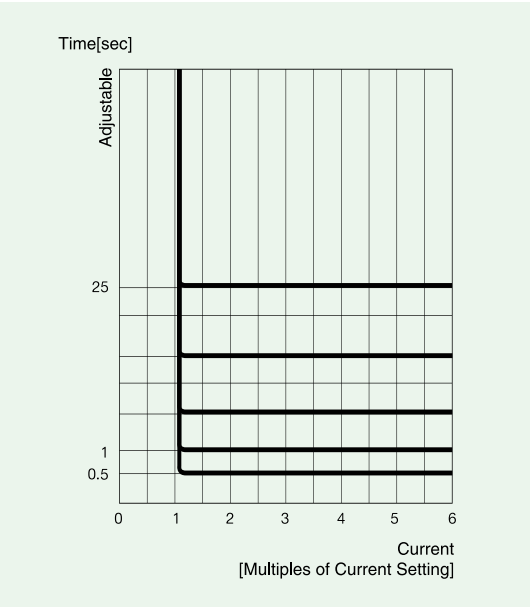

Table 2. Over Current Protection Definite Operation Characteristics

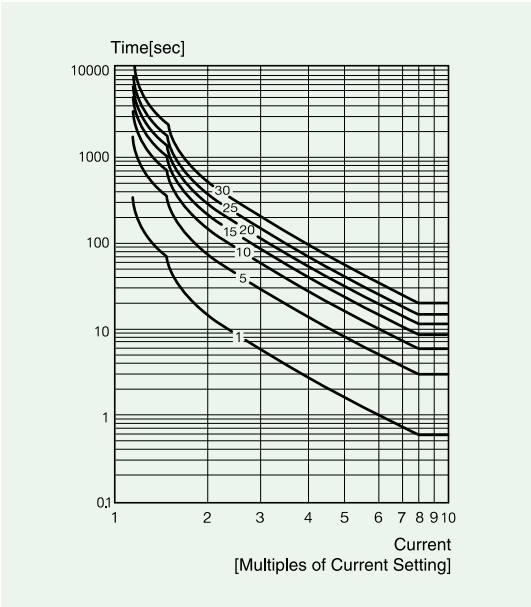

Table 3. Over Current Protection Thermal Inverse Operation Characteristics (0.5~60A)

How to Set Current/Time

- **Over Current Protection**

Settings for Definite

1. Current Setting: Set it on the rated current displayed on the motor nameplate, but to protect the machine as well as the load, it must be set to 110~120% of the operating current when its load level is normal after starting up.
2. Start Delay Time (D-Time): Set the expected start time of the motor. If you are unsure of the start time, set it to 15 sec, start the motor, measure the time it takes for the current (shown on the display window) to change from start current to normal operating current, and change the time to a value that is about 2 seconds longer than the measured start time. If it is the Y-D starter, add 2 sec to the timer set time to allow for the change from Y start to Delta. For loads with a greater inertia, such as Blower (AHU), you may have to set the time even longer depending on the start condition.
3. Operation Time (O-Time): Set the time it takes from the moment the current exceeding the set value starts to flow until the relay begins to operate.

Settings for Inverse or Thermal Inverse

1. Current Setting: Set it on the rated current displayed on the motor nameplate.
2. Start Delay Time (D-Time): There is no need to set the start delay time when using Inverse, but the start time will be delayed. If you want a faster operation time when there is over current flow during the operation, set the D-Time. During the D-Time, the over current will not operate but will be delayed instead, just as in the case of Definite, and after the set time, it will operate using the Hot Curve. For this reason, if there is over current, you may select Curve for faster operation. If you select Thermal Inverse, the operation time will be determined according to the calculated thermal accumulation, regardless of the start delay time setting. Thus, if Thermal Inverse is used, there is no need to set D-Time.
3. Operation Time (O-Time): When using Inverse characteristics, this indicates the operation curve, not the operation time. You may choose the curve from 1 to 30, and this is the operation curve that matches the IEC standard. Also, the operation curves such as 1, 5, and 10 are the times that match operation time on Cold Curve when the current flow has reached 550% of the set current. This can be referenced during the setting.

Alert Operation Characteristics Table

Load Status / ALo Setting	In Operation	Normal operation	Operation Status at the Current specified in the Alert Setting or higher	Trip
Aux “A”				
Flicker “F”				
Hold “H”				
Time Out “to”				
Under Current “uc”				
Insulation Resistance “In”				
MC Count “mc”				
Voltage “Vo”				
Power “Po”				

Product Display Front View

A digital 3-phase current/voltage system function that displays the operating current and phase-to-phase voltage of the 3 phases on the 5-digit, 7-segment digital monitor on the front panel of sPDM together with the phase display, the display of which automatically circulates every 2 seconds.

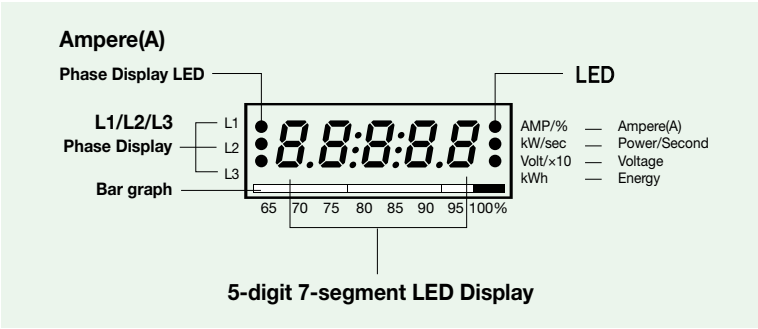

7-segment LED

A large font and a comfortable background color are used to prevent visual interference caused by reflections from the control panel in any direction.

Bar graph

- Allows you to see the load status of the motor by showing the present ratio of the operating current to the OC (Over Current) protection set value.
- If you set the OC set value to the rated current of the motor, the percentage (%) shown on the bar graph will indicate the load factor of the motor.
- Shows the current ratio of the present flow to the set value of the over current. i.e., % = (present current / set value of OC) × 100%
- Current below 65% will not be displayed.
- For example, if you specified the OC setting as 4.5A and the current flow is 3.6A, up to 80% of the LED bar graph will illuminate, but it will not if the current is 2.92A or less. If the current flow is 4.5A or higher, up to 100% (red) of the LED bar graph will illuminate to indicate an overload status.

Display of Each Phase

- Displays the phase with the highest current in the event of OC, Stall, or Jam
- Displays the phase with the lowest current in the event of under current or current unbalance
- Displays the lost phase during the phase loss operation
- Displays the relevant phase if over voltage, under voltage, or voltage unbalance occur
- Displays phases during operation, the current of each phase, and phase-to-phase voltage

Unit Display

- Amp/%: Amp/% LED will be ON when setting current/voltage/power and displaying current.
- kW/Sec: kW/Sec LED will be ON when displaying power and setting time while displaying time in seconds (s).
- Volt/x10: When the voltage display and the current to display reach 999 amperes or higher, the LED will be ON to indicate the flow of 10 times more current. It is set to the interval of every 10 hours when setting the operation time, during which Volt/x10 LED will be ON.
- kWh: kWh LED will be ON when displaying the total electrical energy.

Display Function of Digital 3-phase Current, Voltage, and Electric Energy

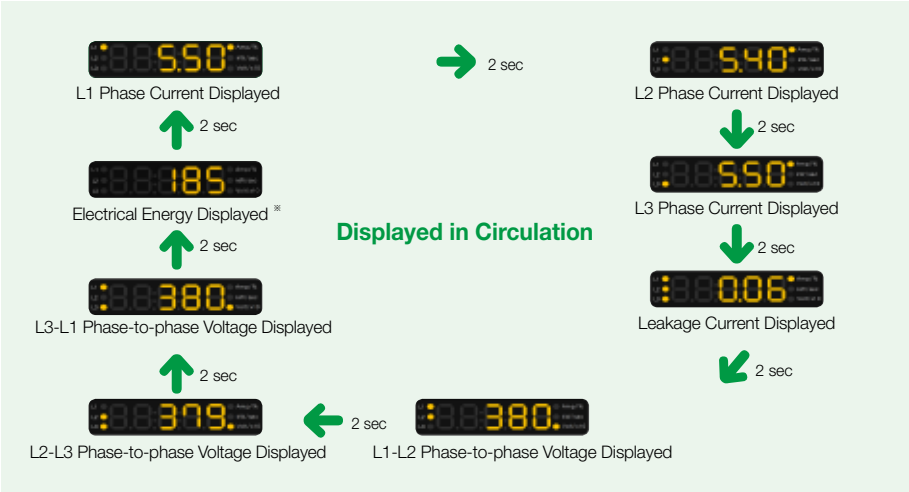

※ If you press the SET button once during operation, the display will change to a manual circulation display instead of an auto circulation display. Once in manual circulation mode, every time you press the SET button, the display will rotate in the abovementioned sequence, making intensive monitoring possible if necessary by fixing on the current and voltage of a specific phase.
※ In manual circulation mode, if you press the ESC button once, it will switch to auto circulation display mode.
※ However, for ISEMD products, the leakage current display is not available.
※ Electrical energy display can be turned on/off by setting it in advance (refer to dSP menu)

Button Switch Functions and Setting Sequence

Button Display	Function
▲UP ▼DN	Press the UP or DN button to find the menu you want to set. For menus, see the descriptions on setting sequence and display.
SET	Press the SET button once to send a signal to the relay that notifies it that the setting process will begin. Then, the number or characters you want to set will start to flicker. This indicates that you can now change the setting.
▲UP ▼DN	Press the UP or DN button to find the number or characters you want to set.
SET	If the characters or number you want to set is displayed, press the SET button for the relay to save it. The character or number then stops flickering. This indicates that the setting has been saved.
ESC	Press the ESC button to return to the current display. If you do not press ESC button for over 50 seconds after the setting is made, it will automatically return to the current display.

※ Fault History View: In Fault History View mode, you can check the fault history, from the most recent fault to the oldest fault. While checking the history, the most recent fault cause, fault current, and fault phase will be displayed. Every time you press the DN button, the values for L1, L2, L3, (earth fault current), L1-L2, L2-L3, L3-L1 will be displayed, in this order. To check the previous fault history, press the DN button again. While the fault history is being displayed, a bar graph will show the display info of the most recent fault only on the 100% LED. The display info of the next-most-recent fault will be displayed on the two LEDs of 95% and 100%, and for the third-most-recent fault info, all three LEDs of 90%, 95%, and 100% will show the fault info. If you press ESC briefly while viewing the fault history, it will switch to the circulation display of current and voltage. If you press the UP or DN button, among the LEDs of L1, L2, and L3 on the left side, the LED of the corresponding phase will display the fault current on the left side. For all other displays, the fault item info will be displayed as well. The history of up to 3 faults is saved, with the oldest history overwritten by a new fault when it occurs.

Mode Setting Sequence

1. Main Mode Setting Sequence

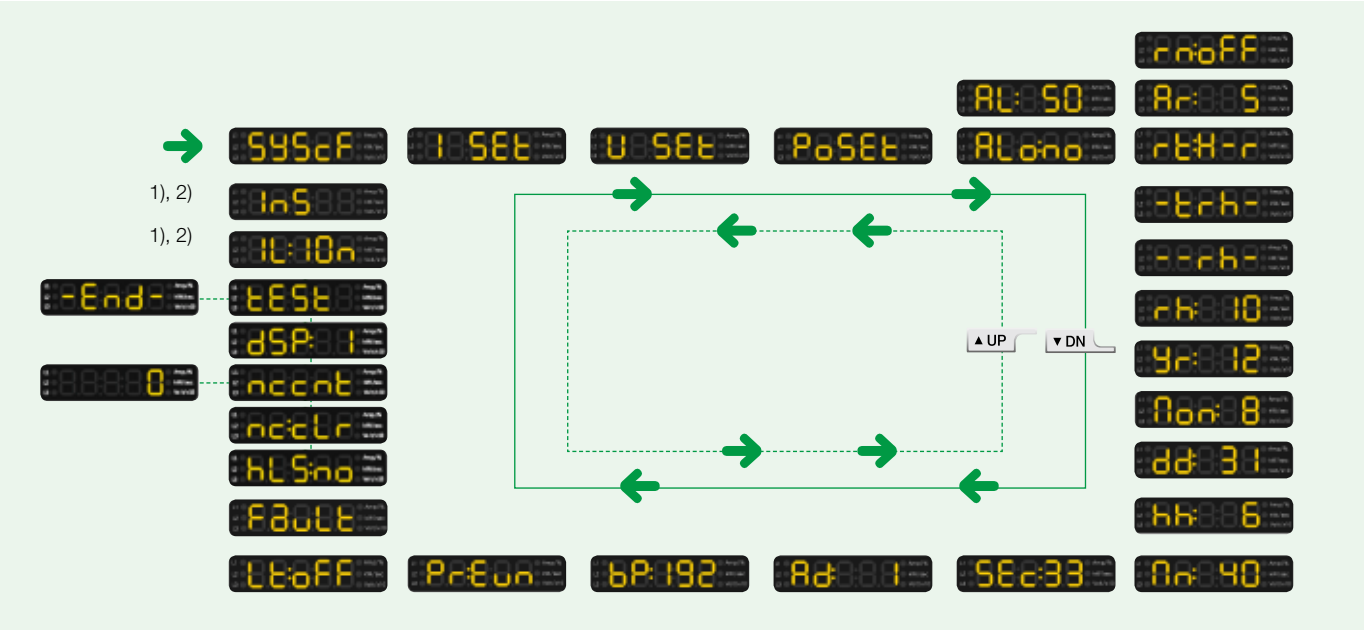

2. Sub Mode Sequence: System Related Mode

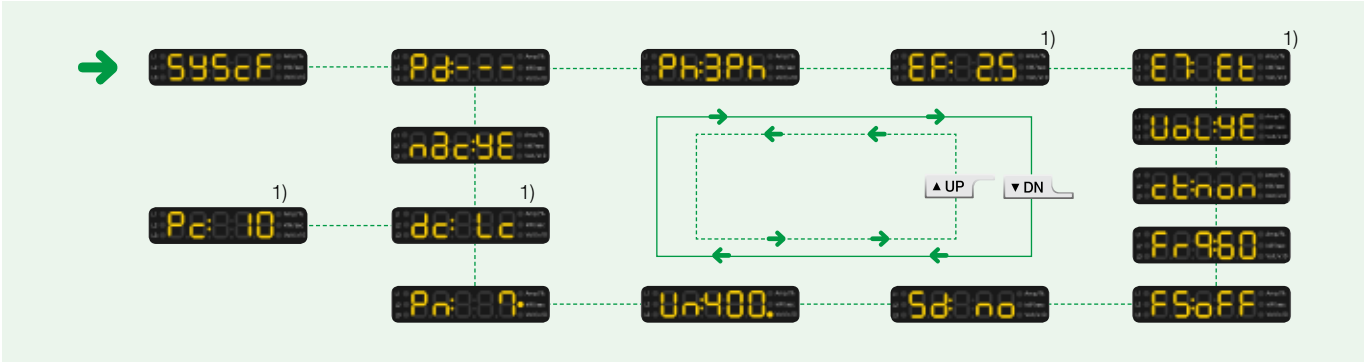

3. Sub Mode Sequence: Current Related Mode

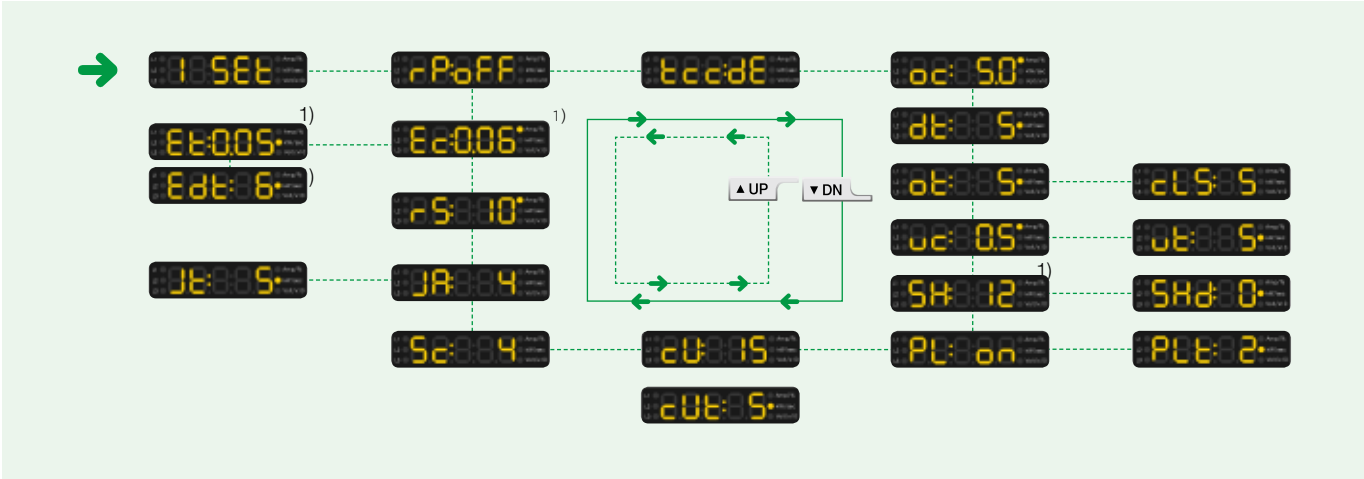

1) This function is not available in iSEMD products.
2) This function is not available in iSEMZ products

Mode Setting Sequence

4. Sub Mode Sequence: Voltage Related Mode

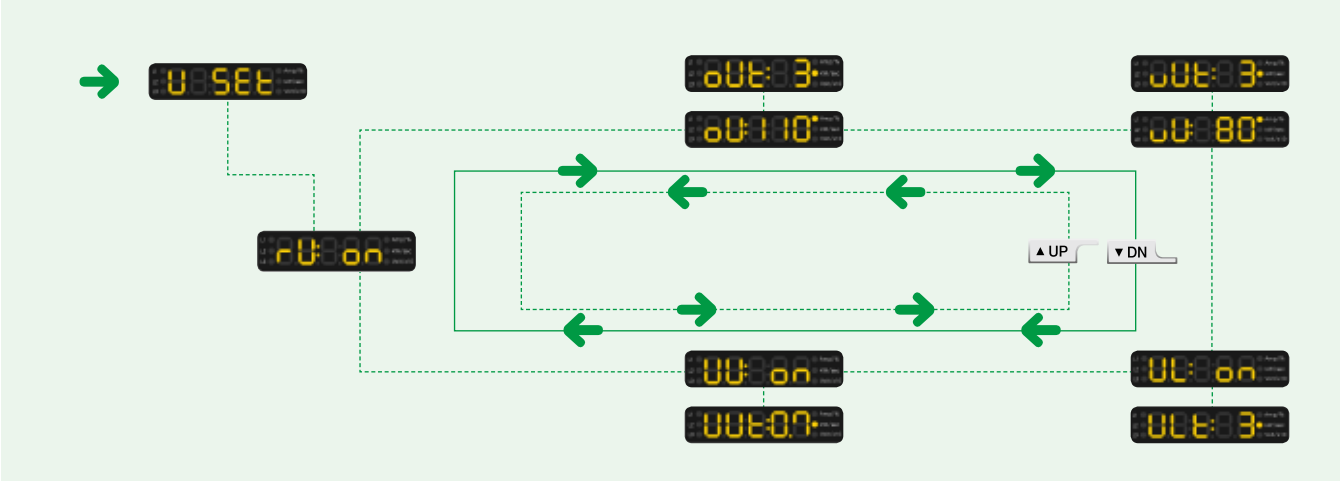

5. Sub Mode Sequence: Current Related Mode

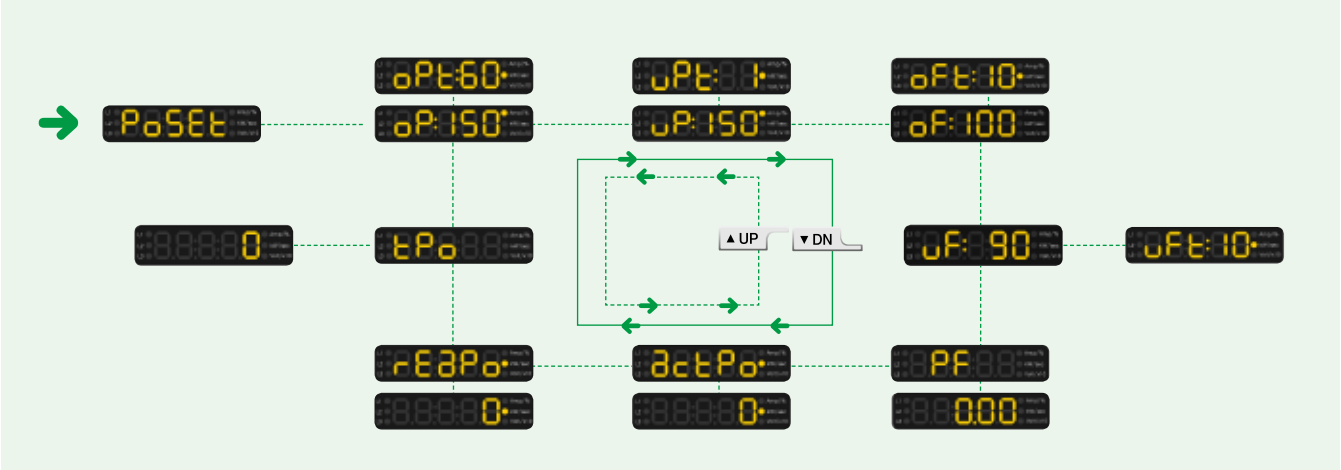

1) This function is not available in iSEMD products.
2) This function is not available in iSEMZ products

Function Setting Sequence and Setting Menu

System Related Setting Item (SYSCF menu): Can be set only when the motor is not running.
During operation, you can only check the set values.

Sequence	Setting Item	Display	Description	Setting Range	Default	Unit
1)	Password	Pd---	Sets password to prevent operators other than the manager from changing certain set values; when set to "000", no password is set.	000~999	---	
2)	3-phase/Single-phase Selection	Ph:3Ph	3-phase or Single-phase selection mode	1Ph, 3Ph	3Ph	
3)	Earth Fault Current Setting Range Selection *1)	EF: 2.5	Earth fault current setting range selection mode If "EF:2.5" is selected, the value can be set from 0.03 to 2.5A. If "EF:10" is selected, the value can be set from 1 to 10A	2.5, 10	2.5	
4)	Earth Fault Current Protection Selection *1)	ET: In	Earth Fault Current Protection Select Mode For "ET:In", use Internal ZCT. Internal ZCT cannot be used for External CT; External ZCT should be selected in that case.	In, Et	In	
5)	Voltage Wiring Selection	Vol:YE	Voltage wiring selection mode If you have wired the voltage input, select "Vol:Ye". If not, select "Vol:no" . If you do not wire the voltage wiring (including electrical energy), the related info will not show up	YE, no	YE	
6)	External CT Ratio Setting	ct:non	If the current is 100A or higher for Definite and 60A or higher for Inverse, an external CT must be used, and this setting ratio indicates the primary current of the external CT.	non, 2t, 3t, 4t, 5t, Cus (ct:10~800)	non	
7)	System Voltage Frequency Selection	Fr:60	Selection mode for the frequency of system voltage	50, 60	60	
8)	Fail Safe Function Selection	FS:oFF	If the control power is supplied while using Fail Safe function, OL (OverLoad) output contact will switch from a to b and from b to a, and it will return to the original phase when tripped.	oFF, on	oFF	
9)	Star-Delta Motor Usage Selection	Sd: no	If the motor is set to start with the Star-Delta setting, this function determines the state as 'operation in progress' even if the current falls to the oFF level or below while switching from Star to Delta.	YE, no	no	
10)	Motor's Rated Voltage Setting	Un:400.	Motor's rated voltage setting mode	110~690	440	Volt/x10
11)	Motor Rated Capacity Setting	Pn: 7.5	Mode to set the motor's rated capacity	0.01~655	7.5	kW/sec
12)	DC Output Selection *1)	dc: Lc	Use 4~20mA analog output with dc:Lc selected; Use Metering pulse output of the electric energy with dc:PS selected	Lc, PS	Lc	
13)	Metering Pulse Value Setting*1)	Pc: 100	Mode to set the metering pulse value Can be set when selecting dc:Ps for DC output.	100, 200, 500, 1000, 5000, 9000	100	
14)	Network Write Permission Selection	nwc:YE	Assign write permission of the set value through the network	YE, no	No	

Voltage related setting items (U SEt menu): If it is disabled in the voltage protection selection (noUno) menu, all voltage-related setting menus will disappear.

Sequence	Setting Item	Display	Description	Setting Range	Default	Unit
1)	Reverse Phase Protection Selection	rU: on	Mode to select the reverse phase protection function Applies only when motor has started	on, oFF	oFF	
2)	Over Voltage Setting	oU: 110	Mode to set the over voltage value, in the form of a percentage (%) Sets as a percentage (%) of the nominal voltage (110~690V)	oFF, 101~115	oFF	AMP/%
3)	Over Voltage Operation Time	oUt: 3	Mode to set the over voltage operation time Cannot be set if oV:oFF is selected for over voltage set value	0.2~30	3	kW/sec
4)	Under Voltage Setting	uU: 80	Sets the under voltage value in the form of a percentage (%) Sets as a percentage (%) of the nominal voltage (110~690V)	oFF, 70~99	oFF	AMP/%
5)	Under Voltage Operation Time	uUt: 3	Mode to set the under voltage operation time Cannot be set if uV:oFF is selected for under voltage set value	0.2~30	3	kW/sec
6)	Select Phase Loss Protection	UL: on	Mode to select the voltage phase loss protection function	on, oFF	oFF	
7)	Phase Loss Operation Time	ULt: 3	Mode to set the voltage phase loss operation time Cannot be set if VL:oFF is selected for phase loss protection	0.1~30	2	kW/sec
8)	Unbalance Factor Setting	UU: on	Unbalance factor = (max. difference between phase-to-phase voltage and average phase-to-phase voltage) / (average phase-to-phase voltage) x 100 %	oFF, 3~15	oFF	
9)	Unbalance Operation Time	UUt:0.5	Mode to set the voltage unbalance operation time	0.2~20	5	kW/sec

Current related setting items (I SEt menu)

Sequence	Setting Item	Display	Description	Setting Range	Default	Unit
1)	Select Reverse Phase Protection	rPoFF	Mode to select the reverse phase protection function Applied only when the motor has started.	on, oFF	oFF	
2)	Select Overload Detection Method	tcc:dE	Mode to select the overload detection method If tcc:no is selected, the over current protection function is ignored. If tcc:dE is selected, the Definite protection characteristic is used. If tcc:In is selected, the Inverse protection characteristic is used. If tcc:th is selected, the Thermal Inverse protection characteristic is used.	no, dE, In, th	dE	
3)	Over Current Setting	oc: 5.0	Mode to set the over current value Can be set from 0.5~100A for Definite and 0.5~60A for Inverse/ Thermal Inverse.	dE: 0.5~100| In/th: 0.5~60	5	AMP/%
4)	Start Delay Time	dt: 5	Mode to set delay time to prevent a trip from being caused by starting current of motor. During this time period, the functions such as over current, under current, Stall, and Jam are all suspended.	0~600	5	kW/sec
5)	Over Current Operation Time	ot: 5	Mode to set the over current operation time	0.2~120	5	kW/sec
6)	Inverse/Thermal Inverse Select Characteristic Curve	cLS: 5	Mode to set the characteristic curve of Inverse or Thermal Inverse Can be set if tcc:In or tcc:th is selected as an overload detection method.	1~30	5	
7)	Under Current Setting	uc: 0.5	Mode to set the under current value Setting it to over current (oc:xxx) or higher is not allowed	oFF, 0.5~oc set value or less	oFF	AMP/%
8)	Under Current Operation Time	ut: 5	Mode to set the under current operation time Cannot be set if uc:oFF is selected for the under current set value	0.5~120	5	kW/sec
9)	Short-circuit Current Setting *1)	SH: 12	Mode to set the short-circuit current value Operates if an earth fault current higher than the set earth fault current is detected. (SH value can be set when oc × SH <= 500A or less.)	oFF, 2~50	oFF	
10)	Short-circuit Current Operation Delay Time*1)	SHd: 0	Mode to set the short-circuit current operation delay time The short-circuit current operation delay time that was set will only apply when the motor starts. Cannot be set if SH:oFF is selected for the short-circuit current set value.	0~20	0	kW/sec
11)	Select Phase Loss Protection	PL: on	Mode to select the current phase loss protection function	on, oFF	oFF	
12)	Phase Loss Operation Time	PLt: 2	Mode to set the current phase loss operation Cannot be set if PL:oFF is selected for phase loss protection	0.5~5	2	kW/sec
13)	Unbalance Factor Setting	cV: 15	Mode to set the current unbalance in percentage (%) Unbalance factor = (max. phase current - min. phase current) / max phase current × 100%	oFF, 10~50	oFF	
14)	Unbalance Operation Time	cVt: 5	Mode to set the current unbalance operation time Cannot be set if cV:oFF is selected for the unbalance factor set value	1~10	5	kW/sec
15)	Stall Current Setting	Sc: 4	Stall set as a multiple of the over current set value (oc:xxx) starts operating within 0.5 sec after the delay operation time (D-Time) is over. This mode does not show up when D-Time is 0. (Sc value can be set when oc × Sc <= 500A or less.)	oFF, 2~8	oFF	
16)	Jam Current Setting	JA: 4	Jam is set as a multiple of the over current set value (oc:xx), and protects the motor if there is a rapid load increase during operation. (Sc value can be set when oc × JA <= 500A or less.)	oFF, 1.5~8	oFF	
17)	Jam Operation Time	Jt: 5	Mode to set the Jam current operation time Once set, the Jam operation time will only be applied when the motor is operating. Cannot be set if JA:oFF is selected as the Jam current set value.	0.2~10	5	kW/sec
18)	4~20mA Output Setting *1)	rS: 10	Mode to set the output of 4~20mA with range setting 20mA output is generated if the current flowing in EOCR is detected as being over the Range Setting set current, and 4mA output is generated under the minimum detected current of 0.4A or less.	0.5~100	oFF	Amp/% Volt/X10
19)	Earth Fault Current *1)	Ec:0.06	Mode to set the earth fault current value Inspects the insulation of the circuit or the unique leakage current contained within the motor itself after the installation, and sets the current which has been identified as having no faults. The earth fault current that was set indicates ZCT primary earth fault current.	oFF, 0.03~2.5 (when EF:2.5 is selected) oFF, 1.0~10A (when EF:10 is selected)	oFF	AMP/%
20)	Earth Fault Current Operation Time *1)	Et:0.05	Mode to set the earth fault current operation time Earth fault operation time range will automatically change based on whether you select Internal ZCT or External ZCT. Cannot be set if Ec:oFF is selected as the earth fault current set value.	0.05~10s (when ET:In is selected) 0.1~10s (when ET:Et is wselected)	1	kW/sec
21)	Earth Fault Current Operation Delay Time *1)	Edt: 6	Mode to set the earth fault current operation delay time The earth fault current operation delay time that was set will only apply when the motor has started. Cannot be set if Ec:oFF is selected for the earth fault current set value.	0~30	0	kW/sec

Auxiliary Functions and Communication Related Setting Items

Sequence	Setting Item	Display	Description	Setting Range	Default	Unit
1)	Alert Output Setting	ALo:A	Indicates Ampere Relay. When current is detected, 07-08 output contacts close, but open when there is no current.	A, F, H, to, uc, In, Mc, Vo, Po, no	no	
		ALo:F	Indicates Flickering, which means that if you attach a light on the output contact, the light will flicker and if the current higher than the alert setting (%) flows, Close→Open will be repeated.			
		ALo:H	Indicates Holding. In this output, if the current higher than the alert setting (%) flows, the output contact is closed, but if the current is below the alert setting (%), the contact is opened.			
		ALoto	Indicates Time Out. If set when the Running Hour of the motor is set and the time set from rh:xx is passed, the output contact will repeat the process of closing for 1 second and opening for 1 second, which serves as a signal to indicate that time has passed.			
		ALouc	Output for using the operation of under current; the output contact is closed if under current occurs. If you select a different alert output, the contact will not close even if under current occurs.			
		ALoIn	Setting to be used for insulation diagnostic output. If this value is equal to or less than the reference resistance value when the insulation diagnostic test is over, the output contact will be closed. *1), 2)			
		ALonc	Indicates the number of times the electromagnetic contactor has been operated. If it reaches or exceeds the set number of operations, the contact will be closed.			
		ALoUo	A contact for using the voltage output. The contact will be closed when operated.			
		ALoPo	A contact for using the power output. The contact will be closed when operated.			
		ALono	The alert output will not be used when this mode is selected.			
2)	Alert Setting	AL: 50	Indicates the alert setting, and is set as a percentage (%) of the over current setting. If current that is equal to or greater than the set percentage(%) is detected, 07-08 terminals will generate output based on the alert output (ALo:xx) setting. Can be set if ALo:F or ALo:H is selected for alert output set value.	50~100	50	
3)	Fault Reset Setting	rtE-r	Indicates electric reset. It is also called 'remote reset' because the fault can be reset remotely by means of resetting when the control power of EOCR is cut.	E-r, H-r, A-r	E-r	
		rtH-r	Indicates manual reset, enabling a reset simply by pressing the Reset and sPDM ESC buttons. Used when trip cause check and reset are required.			
		rtA-r	Indicates auto reset. Auto reset occurs if EOCR is operated and the set auto reset time (A-r) has passed.			
4)	Auto Reset Time	Ar: 5	Mode to set the auto reset time, which can only be set when auto reset (r-t:A-r) is selected for the fault reset setting.	0.5~20n	5	
5)	Restart Limit Setting	rnoFF	Can be set if rt:A-r is selected as the fault reset value. Restart limit can be set if auto reset (rt:A-r) is selected for the fault reset setting, and is used to prevent excessive heat accumulation by limiting the number allowed for restart in 30 minutes. Can be set if rt:A-r is selected as the fault reset set value.	oFF, 1~5	oFF	
6)	Cumulative Total Operation Time	-trh-	If there is current flow that exceeds the min. perception current after installing EOCR, the operating time is accumulated for integration of up to a total of 99,999 hours. The min. display time is presented in units of 1 hour. The cumulative total operation time cannot be deleted or modified. The cumulative total operation time can be checked through "-trh- ↔ 0.0" by pressing the SET button	0~99999	0	
7)	Display of Cumulative Operation Time	--rh-	Motor's operation time is repeatedly displayed, and when set to rh:oFF if the motor stops, the operation time is deleted. If it is reset, the operation time is accumulated. The cumulative operation time can be checked through "-trh- ↔ 0.0" by pressing the SET button	0~99999	0	
8)	Cumulative Operation Time Alert Output Setting	rh: 10	Mode to set the cumulative operation time alert output If the set time passes when set to ALo:to, the output is generated through 07-08 contacts. If set to 0, the cumulative operating time is deleted.	0~9990	0	
9)	Year Setting	Yr: 12	Mode to set the year	09~99	12	
10)	Month Setting	Mon: 8	Mode to set the month	1~12	11	
11)	Date Setting	dd: 31	Mode to set the date	1~31	1	
12)	Hour Setting	hh: 6	Mode to set the hour	00~23	1	
13)	Minute Setting	Mn: 40	Mode to set the minute	00~59	40	
14)	Second Setting	SEc:33	Mode to set the second	00~59	39	
15)	Slave Address Setting	Ad: 1	Mode to set the Modbus slave address	1~247	1	
16)	Communication Speed Setting	bP:192	Mode to set the communication speed The communication speed is displayed as follows: 12: 1.2kbps, 24: 2.4kbps, 48: 4.8kbps, 96: 9.6kbps, 192: 19.2kbps, 384: 38.4kbps	12, 24, 48, 96, 192, 384	192	
17)	Parity Setting	PrEun	Mode to set the communication parity If pr:no1 is selected, the stop bit becomes 2. If the remaining pr:non, pr:Eun, or pr:odd is selected, the stop bit becomes 1.	non, no1, Eun, odd	Eun	
18)	Communication Loss Detection Time	LtoFF	Indicates communication Time Out. If there is no data request from the host within the communication detection time, it will be considered as a loss of communication, and a warning will be generated.	oFF, 1~999	oFF	

Sequence	Setting Item	Display	Description	Setting Range	Default	Unit
19)	Fault Information Cause Check	FaULt	Mode to check the fault information cause The fault information cause can be checked for up to 3 records.	3 records		
20)	PDM Connection Status Check Setting	hLSno	Mode to check the connection status of the display device (sPDM). When YE is selected, it will be tripped if the communication for main body and sPDM are interrupted for 7 seconds or more.	YE, no	no	
21)	Inner Thermal Capacity Value Reset Setting	clrth	Mode to reset the inner thermal capacity value Reset setting can be enabled by pressing the SET button → clr:th (flickering) → SET button.	th	th	
22)	Mc Operation Count Setting	mcctr	If Mc operation count is set and the count of Mc operation reaches or exceeds the set value, it can be used as a pre-alarm through the output contacts (07-08). indicates 1000 (a thousand). When clr is selected, the count saved is reset.	clr, 1000~9990000	clr	
23)	Mc Operation Count View	mccnt	When selecting Mc operation number with view menu, detected Mc operation count is shown.			
24)	Display Mode Selection	dSP:1	If mode 1 is selected for circulation display setting, voltage, current, and power are displayed. If mode 2 is selected, only voltage and power are displayed.	1, 2	1	
25)	Output Contact Test	tESt	This can only be used when the motor has stopped running. If this mode is selected, tESt starts to flicker, counts down the set O-Time after 3 seconds, displays the End message, and the status of output will be provided in a trip status. By pressing ESC, you can go back to the current display. If the motor is operating, this mode will not be displayed in order to prevent a trip.			
26)	Reference Insulation Resistance Value Setting *1) *2)	IL:10n	Mode to specify the reference insulation resistance value of the motor	1MΩ, 5MΩ, 10MΩ	10MΩ	
27)	Insulation Resistance Test *1) *2)	InS	Mode to diagnose the insulation resistance of the motor A diagnosis can only be performed when the motor is not running. When this option is selected, the diagnosis begins. After counting down for 60 seconds, it reports if the value is higher or lower than the set reference value (1MΩ, 5MΩ, 10MΩ). If In is selected for the alert output setting (see Alo setting), the test result can be received through 07-08 contacts as well.			

Power Related Item and Measurement (PoSEt menu): When 'no wiring' is selected from the voltage wiring select (VoLYE) menu, all settings menus relating to power disappear.

Sequence	Setting Item	Display	Description	Setting Range	Default	Unit
1)	Overpower Setting	oP:150	Sets the overpower value in the form of a percentage (%) Sets as a percentage (%) of the rated capacity (0.01~999kW).	oFF, 20~800	oFF	AMP/%
2)	Overpower Operation Time	oPt:60	Mode to set the overpower operation time Cannot be set if oP:oFF is selected for the overpower set value.	1~100	60	kW/sec
3)	Low Power Setting	uP:150	Sets the low power value in the form of a percentage (%) Sets as a percentage (%) of the rated capacity (0.01~999kW).	oFF, 20~800	oFF	AMP/%
4)	Low Power Operation Time	uPt:1	Mode to set the low power operation time Cannot be set if uP:oFF is selected for the low power set value.	1~30	1	kW/sec
5)	Overpower Factor Setting	oF:100	Mode to set the overpower factor value	oFF, 0-100	oFF	
6)	Overpower Factor Operation Time	oFt:10	Mode to set the overpower operation time Cannot be set if oF:oFF is selected for the overpower factor set value.	2~30	10	kW/sec
7)	Underpower Factor Setting	uF:90	Mode to set the underpower factor value	oFF, 0~100	oFF	
8)	Underpower Factor Operation Time	uFt:10	Mode to set the underpower operation time Cannot be set if uF:oFF is selected for the underpower factor set value.	1~30	10	kW/sec
9)	Power Factor (PF) Display	PF	Displays the motor's power factor (cannot be modified) By pressing the SET button, the power factor value can be checked in "PF ↔ 0.00".	0.00~1.00	0	
10)	Active Power (kW) Display	actPo	Displays the motor's active power (cannot be modified) By pressing the SET button, the active power value can be checked in "actPo ↔ 0".		0	kW/sec
11)	Reactive Power (kVar) Display	tPo	Displays the motor's reactive power (cannot be modified) By pressing the SET button, the reactive power value can be checked in "rEaPo ↔ 0".		0	kW/sec
12)	Active Energy (kWh) Display	rEaPo	Displays the motor's total active energy (cannot be modified) By pressing the SET button, the active energy value can be checked in "tPo ↔ 0".		0	

*1) This function is not available in iSEMD products.
*2) This function is not available in iSEMZ products.

Trip Cause Display and Check Method

Once EOCR is tripped, the cause of the trip and the current, voltage, or energy are displayed, and the last 3 trip causes and the current, voltage, and time at each phase at the time of the trips are saved. This means that it is possible to check them in the Fault mode. Trip causes can be checked regardless of the motor's status, i.e. whether it is operating or not.

Trip Cause	Fault Status Display	Fault Cause Display Description
Over Current	oc 3.5	Tripped by detecting over current of 3.5A at L1 phase while operating
Under Current	uc 1.5	Tripped by detecting under current of 1.5A at L3 phase while operating
Current Phase Loss	PL -r	Tripped by detecting phase loss at L1 phase
Current Unbalance	Ub 5.5	Tripped by detecting an unbalance due to a current deviation at L3 phase
Stall	St450	Tripped by detecting burden current of 45A at L1 phase while operating
Jam	Ja350	Tripped by detecting burden current of 35A at L2 phase while operating
Leakage Earth fault *1)	Ec0.15	Tripped by detecting earth fault current of 0.15A
Short-circuit *1)	SH600	Tripped by detecting short-circuit current of 60A at L3 phase
Current Reverse Phase	-IrP-	Tripped by detecting current reverse phase during start-up
Over voltage	oU390.	Tripped by detecting over voltage of 390V between L1 and L3 phases during operation
Under Current	uU210.	Tripped by detecting under voltage of 210V between L2 and L3 phases during operation
Voltage Phase Loss	UL 1.5	Tripped by detecting phase loss due to a phase-to-phase voltage deviation at L1-L2
Voltage Unbalance	Ub 10.	Tripped by detecting unbalance due to a phase-to-phase voltage deviation at L1-L2
Voltage Reverse Phase	-UrP-	Tripped by detecting voltage reverse phase
Overpower	oP350	Tripped by detecting overpower of 350kW during operation
Low Power	uP150	Tripped by detecting low power of 150kW during operation
Overpower Factor	oF0.99	Tripped by detecting an overpower factor of 0.99 during operation
Low power factor	uF0.55	Tripped by detecting a low power factor of 0.55 during operation
PDM Communication Loss	PdLoS	Tripped because communication with PDM has been lost
Network Communication Interruption	ntLoS	Tripped because network communication with Modbus has been lost
Faulty Button	btn	Tripped due to a faulty Reset button on the main body
External Fault	EtFLt	Tripped after receiving a fault signal through network communication
Auto Reset Limit	rnFuL	Tripped because the count of auto reset attempts within 30 minutes has exceeded the set number
Internal Fault	ItErr	Tripped due to an internal fault
Test Completed	-End-	Tripped when a test is completed

**1) This function is not available in iSEMD products.*

I/O (Input/Output) Terminal Diagram

• ISEMM-xxxxx

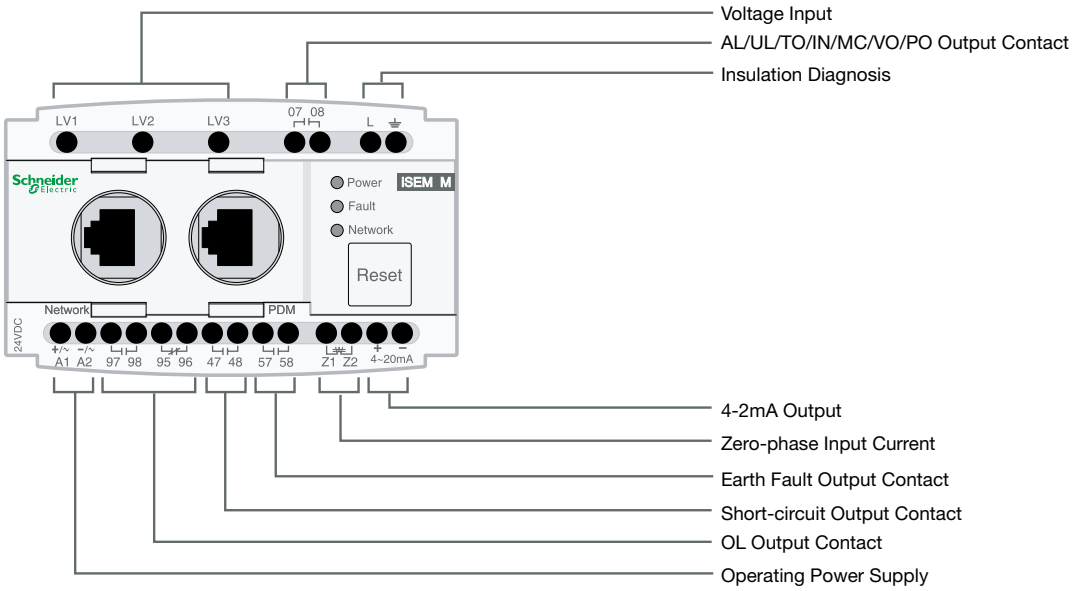

• ISEMZ-xxxxx

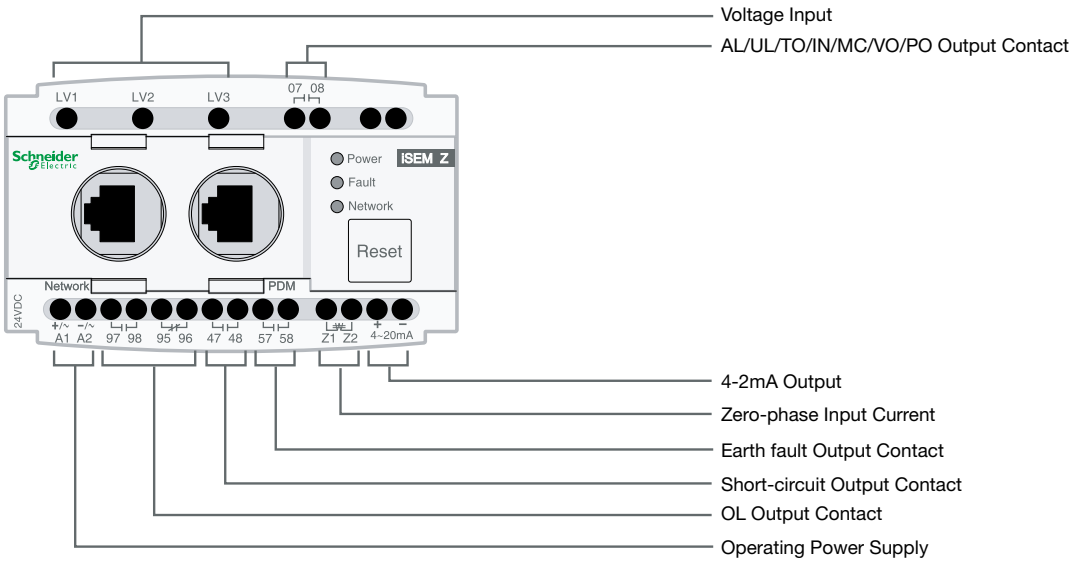

• ISEMD-xxxxx

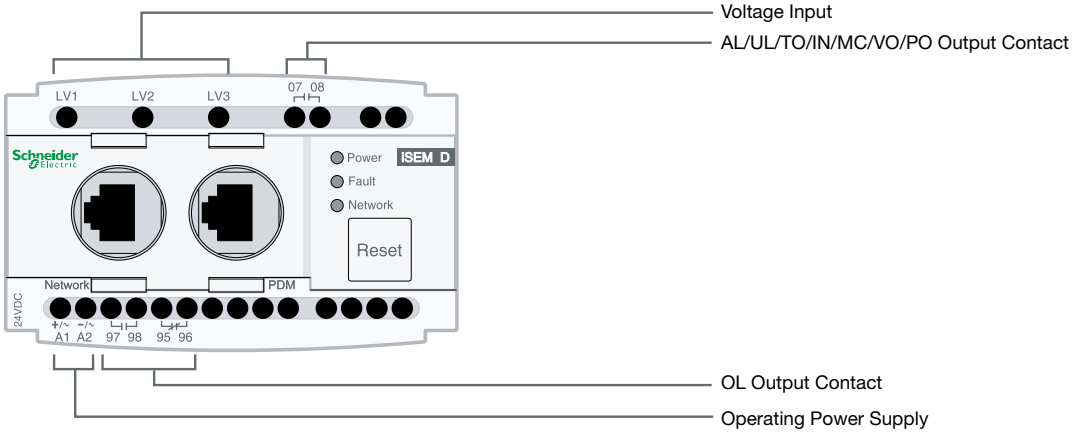

Wiring Example Diagram

Direct On Line (DOL) Starter

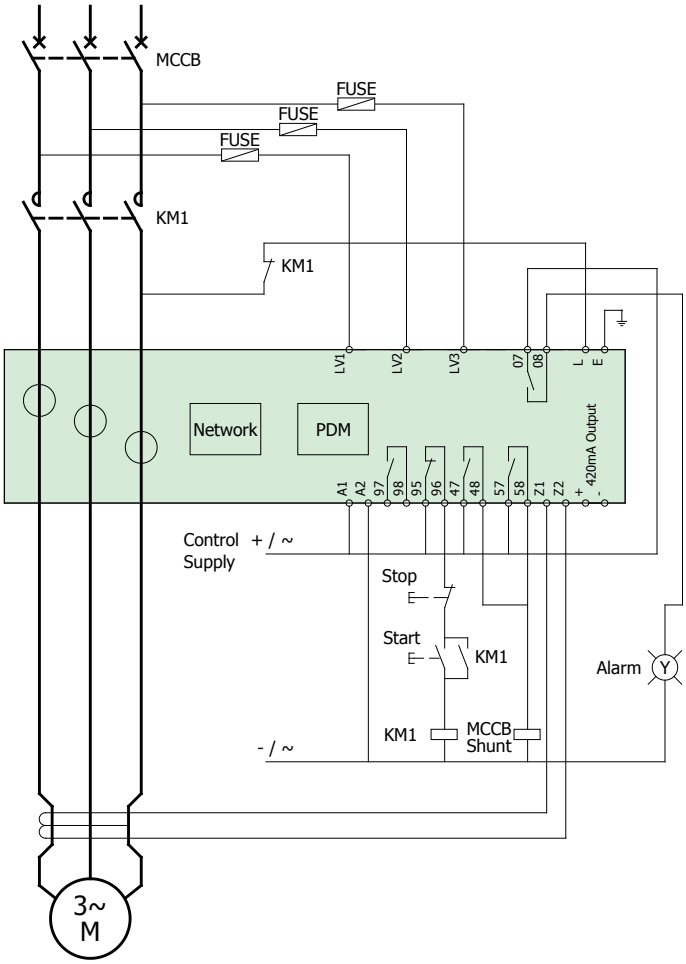

※Use an insulated power supply for the control power.

Dimensions Diagram

iSEM-xxxT

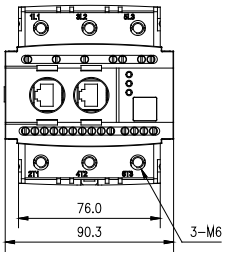

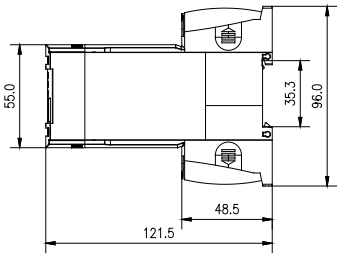

PANEL & DIN RAIL TYPE

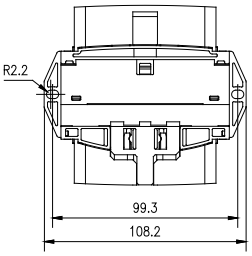

MOUNTING HOLE SIZE

iSEM-xxxH

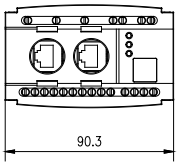

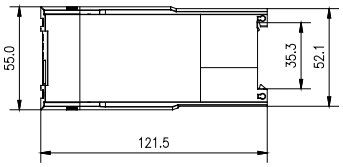

PANEL & DIN RAIL TYPE

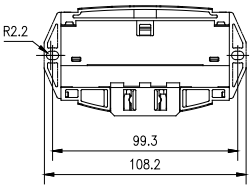

MOUNTING HOLE SIZE

Dispaly
EOCR-sPDM

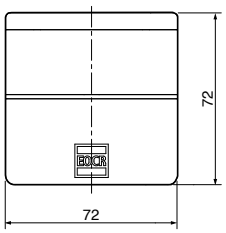

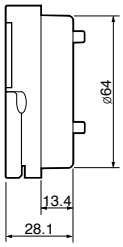

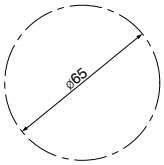

EOCR-iSEM

How to Order

To order an EOCR-iSEM:

I S E M M – W R U H

❶ ❷ ❸ ❹

❶	**Product Type**	**MD**	Electric Energy + Standard
		MZ	Electric Energy + Earth Fault Protection
		MM	Electric Energy + Earth Fault Protection + Insulation Resistance Diagnosis
❷	**Current Range**	**WR**	0.5~100A
		H1	100:5A 3CT Combination
		HH	150:5A 3CT Combination
		H2	200:5A 3CT Combination
		H3	300:5A 3CT Combination
		H4	400:5A 3CT Combination
❸	**Operating Power Supply/Frequency**	**B**	DC 24V
		U	AC 100~240V 50/60Hz)
❹	**CT Format**	**H**	Bottom Hole
		T	Terminal

To order an RJ45 Cable:

C A B L E – R J 4 5 – 0 0 1

❶ ❷

❶	**Cable Connection Specifications**	**RJ45**	
❷	**Cable Length**	**00H**	0.5M
		1	1M
		01H	1.5M
		2	2M
		3	3M
		Other	Order Specifications (Up to 150M)

EOCR-PMZ/PFZ

EOCR-PMZ Built-in Panel

EOCR-PFZ Embedded Pa-

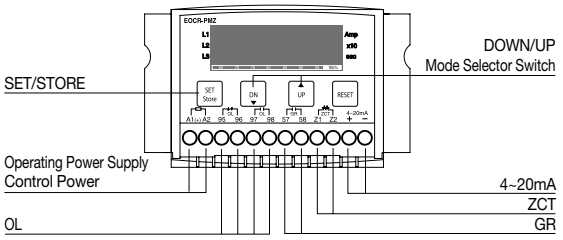

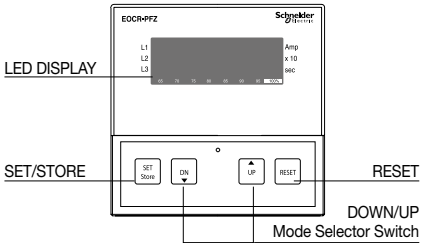

Main Features

- Current system function, which automatically displays 3-phase current and leakage current in circulation every 5 seconds
- Can be switched from auto circulation display mode to manual circulation mode with the touch of a button, allowing focused display on a certain element (one specific phase out of 3 phases or leakage current)
- Contains the over current/under current/earth fault/current signal output function in a single EOCR
- Wide range of use: 0.1~3600A - wide range: 0.5~60A; for 5 holes: 0.1~2.0A; with the use of an external CT: 1~3600A
- Easily identifiable characters and numbers displaying trip causes
- The last trip causes remembers up to the 3 most recent trip causes and the current at the time of the trips, and checks the operation even during the recovery of electricity after a power outage
- Includes a timer function for checking total operation time and to provide a reminder of maintenance tasks, such as bearing replacement
- Has a bar graph which helps the manager to set over current conveniently and to check the motor load factor
- Has a transducer function (4~20mA current signal output) for easy and focused management
- For over current operation characteristics, select from Definite, Inverse, and Thermal Inverse
- Earth fault (leakage) current detection: zero-phase current detection method
- For earth fault current operation characteristic, apply either Definite or Inverse
- Over Current Protection Characteristics
  - Thermal Memory Protection ("th"): When Inverse is applied, the cumulative calculation value of the heat generated during the motor's operation is remembered in order to be protected directly by the hot curve instead of the cold curve. (Automatically resets 20 minutes after the motor stop)
  - Non-thermal Memory Protection ("In"): When Inverse is applied, it is protected by the cold curve if the motor has started, and by the hot curve during normal operation
- Removable EOCR allows its use in the terminal type or the hole type (removable terminal strip)

Protection Function

Protection Function	Operation Condition Characteristics	Operation Time	
Over Current	Can select from Definite/Inverse/Thermal Inverse	Operates based on the set ot	
Under Current	Operates in Definite (can be set from 0.2~30 sec)	Operates based on the set ut	
Phase Loss	Works in PL Mode, ON / oFF selectable	Within 3 sec	
Reverse Phase	Works in RP Mode, ON / oFF selectable	0.1~0.3 sec	
Unbalance	• Operates if the current deviation exceeds the set % against the max. phase current • [(Max. phase current - min. phase current) / max. phase current] × 100[%]	Within 8 sec	
Locked Rotor	1.5~5Times "oc"Setting/Definite operation characteristic	Stall (during operation)	oFF / 0.1~10 sec, Adjustable
	oFF / 2~10Times"oc"Setting / Definite operation characteristic	Lock (during start-up)	Operates within 0.5 sec after dt
Earth fault	• 0.03~10A: Definite • 0.03~1A: Inverse • oFF	Operates based on the set time (Et) (can select between Definite or Inverse)	

Secondary Function

Secondary Function	Application		Operation Condition Characteristics
Current Signal Output	4~20mA		The role of transducer ※For current (4~20mA) output cable, a shield cable [2C-1.25㎟-CVV-SB Cable] must be used.
Total Operation Time	Records the total operation time of the motor since its installation (Displays up to 99999 hours)		After being set to 0 hours at the time of factory shipment, it cannot be modified afterwards Time is accumulated only for the time the motor has operated
Operation Time	Set to oFF, 1~9900 hours (in min. unit of 1 hour)		Time is accumulated only for the time the motor has operated (setting provided)
Reset Function	H-r	Manual Reset	Reset with the Reset Button on the front side
	E-r	Electrical Reset	Reset by the control power cut
	A-r	Auto Reset (0.3 sec reset)	0.3 sec ~ 59 sec ~1 min ~ 20 min (setting available) However, auto reset is not available for phase loss, reverse phase, earth fault, locked rotor, and stall
Fault Cause Save Function	Function to search recently operated info (including test mode operation)		Can search up to 3 operations from the last operation (Last trip) even during operation
Fail Safe	Self-diagnosis function based on operating power supply		Works in FS Mode, ON/oFF selectable

Specifications

Current Setting	Over Current (OC)		Refer to the current setting range table	
	Under Current (UC)		oFF/0.5~over current set value or below	
	Earth Fault Current (EC)		0.03A-10A: Definite, 0.03~1A: Can select from Definite/Inverse, oFF	
Time Setting	Start Delay Time (OT)		oFF~200 sec	
	Over Current Operation Delay Time (OT)		0.2~30 sec (Definite) 1~30 (Inverse)	
	Under Current Operation Delay Time (UT)		0.5~30 sec (Definite), if "Uc"mode is oFF, "Ut"Mode automatically switches to oFF as well	
	Earth Fault Current Operation Delay Time (ET)		Definite/Inverse: 0.05, 0.1~1~10 sec (0.1~1 sec: Changes in increments of 0.1 sec, 1~10 sec: Changes in increments of 1 sec	
	Earth Fault Operation Delay Time (ED) during start-up		oFF/1~10 sec, applied to Definite operation	
Error Tolerance	Current		1<1A:±0.05A,1≥1A:±5%	
	Time		t≤3s:±0.2s,t>3s:±5%	
Operating Power Supply	220		AC/DC85V~250V, 50/60Hz	
Output Contact	OL		2-SPST	AC250V / 3A Resistive Load
	OR		1-SPST	AC250V / 3A Resistive Load
Usage Environment	Temperature	Storage	-30~80℃	
		Operation	-20~60℃	
	Humidity		30~85% RH (with no dew condensation)	
Display Function	7-segment LED		Displays 3-phase current, leakage current, cumulative operation time, trip cause	
	Bar graph		Displays actual load factor	
Insulation Resistance	Between circuit and case		DC500V/10MΩ or more	
Insulation Withstanding Voltage	Between circuit and case		2KV, 50/60Hz for 1 min	
	Between contacts		1.0KV, 60Hz for 1 min	
	Between circuits		2.0KV, 60Hz for 1 min	
Installation Method	35mm Din Rail or Panel			
Electrostatic Discharge	IEC61000-4-2		Level3: Air Discharge: ±8kV, Contact Discharge: ±6kV	
Radiated Discharge	IEC61000-4-3		Level3: 10V/m, 80~1000MHz	
Conducted Disturbance	IEC61000-4-6		Level3: 10V, 0.15~80MHz	
EFT/Burst	IEC61000-4-4		Level3: ±2kV, 1min	
Surge	IEC61000-4-5		Level3: 1.2×50μs, ±2kV(0°, 90°, 180°, 270°)	
1MHz Burst Disturbance	IEC61000-4-12		Level3: 2.5kV, 1MHz	
Emission	IEC60255-25		Class A (Conducted & Radiated)	

Over Current Operation Time Characteristics Curve

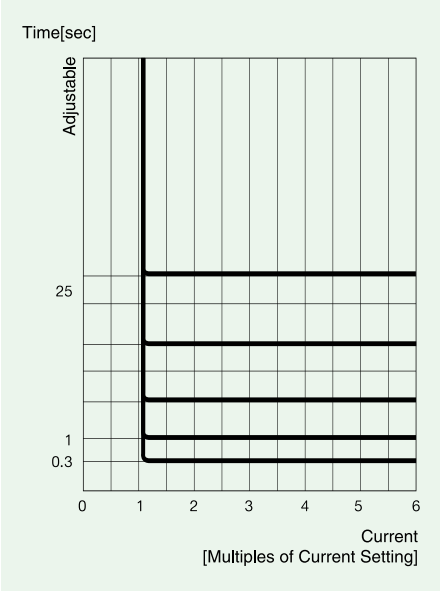

Table 1. Over Current Protection Definite Operation Characteristics Curve

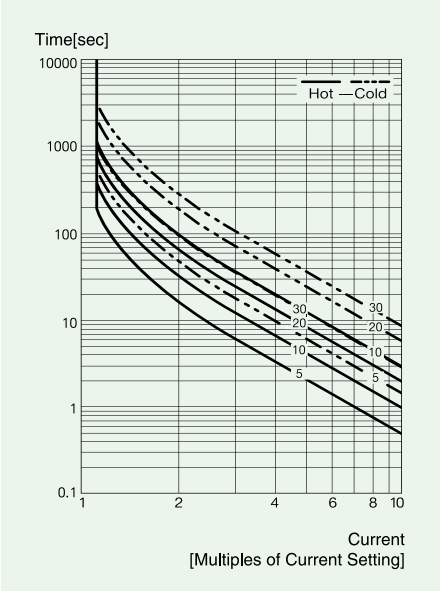

Table 2. Over Current Protection Inverse Operation Characteristics Curve (0.5~10A, external CT combination)

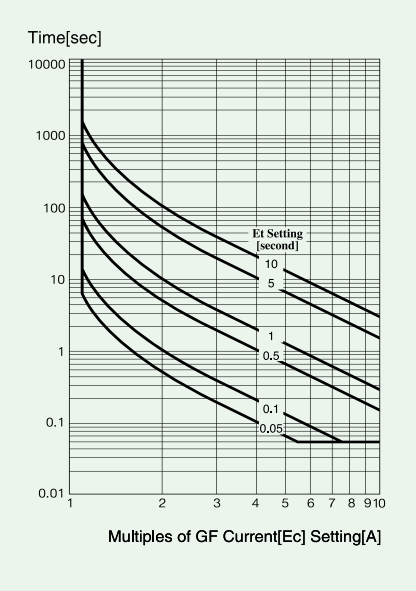

Table 3. Earth Fault Current Protection Inverse Operation Characteristics Curve (current range: 0.03~1A)

Current Setting Range Table

Setting Range	Number of CT Holes	External CT Current Transformer Ratio	CT Setting	Notes
0.5~60A	1	No CT combination	oFF	Wide range
0.25~5.0A	2 holes	No CT combination	2t	
0.1~2.0A	5 holes	No CT combination	5t	
1~12A	1	10:05	10	
1.5~18A	1	15:05	15	
2.0~24A	1	20:05	20	
2.5~30A	1	25:05:00	25	
3.0~36A	1	30:05:00	30	
4.0~48A	1	40:05:00	40	
5~60A	1	50:05:00	50	
6~72A	1	60:05:00	60	
7.5~90A	1	75:05:00	75	
10~120A	1	100:05:00	100	
12~144A	1	120:05:00	120	
15~180A	1	150:05:00	150	
20~240A	1	200:05:00	200	
25~300A	1	250:05:00	250	
30~360A	1	300:05:00	300	
40~480A	1	400:05:00	400	
50~600A	1	500:05:00	500	
60~720A	1	600:05:00	600	
75~900A	1	750:05:00	750	
80~960A	1	800:05:00	800	
100~1200A	1	1000:05:00	1000	
120~1440A	1	1200:05:00	1200	
150~1800A	1	1500:05:00	1500	
200~2400A	1	2000:05:00	2000	
250~3000A	1	2500:05:00	2500	
300~3600A	1	3000:05:00	3000	

Display Front View

LED Display (Bar Graph Type)

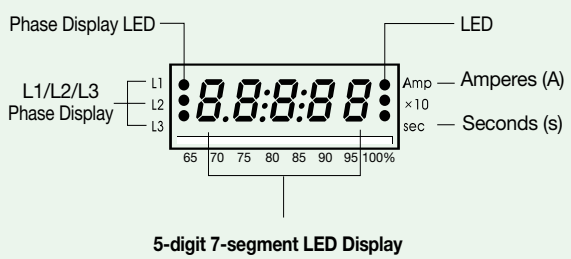

※ *A digital 3-phase current system function that automatically displays the 3-phase operating current in circulation on the 5-digit 7-segment digital monitor installed on the front side of EOCR, together with the phase display, at 5-second intervals.*

3-phase Digital Current System Function

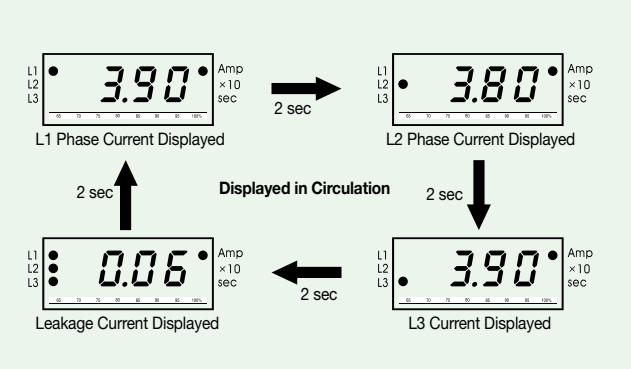

※ *Press the SET (store) button once during operation to view manual circulation display instead of auto circulation display. Every time you press the SET (store) button in manual circulation mode, the display rotates in the order specified above, allowing you to lock on a certain element if necessary.*

Button Switch Functions and Setting Sequence

1. Mode	DN UP	Press the Up/Down switches to find a Mode to set.
2. Set	SET Store	Press the SET (store) button once, and the mode and value start to flicker.
3. Adjust	DN UP	Press the Up/Down switches to select the necessary value or characters.
4. Store	SET Store	Press the SET (store) button once, and the flickering will stop as the selected value or characters are stored.
5. Reset	RESET	Once the setting is done, press the Reset button or leave it for 30 seconds to complete the setting.
※ **Manual Circulation Display**		-When you press the SET (store) button during operation, the 3-phase current will be displayed in auto circulation mode instead of in manual circulation mode. -Once the original L1 phase is displayed, every time you press it, the phase will be displayed in circulation order of L2→L3→Leakage Current→L1 phase. Press Reset to return to auto circulation display status.

• Setting sequence

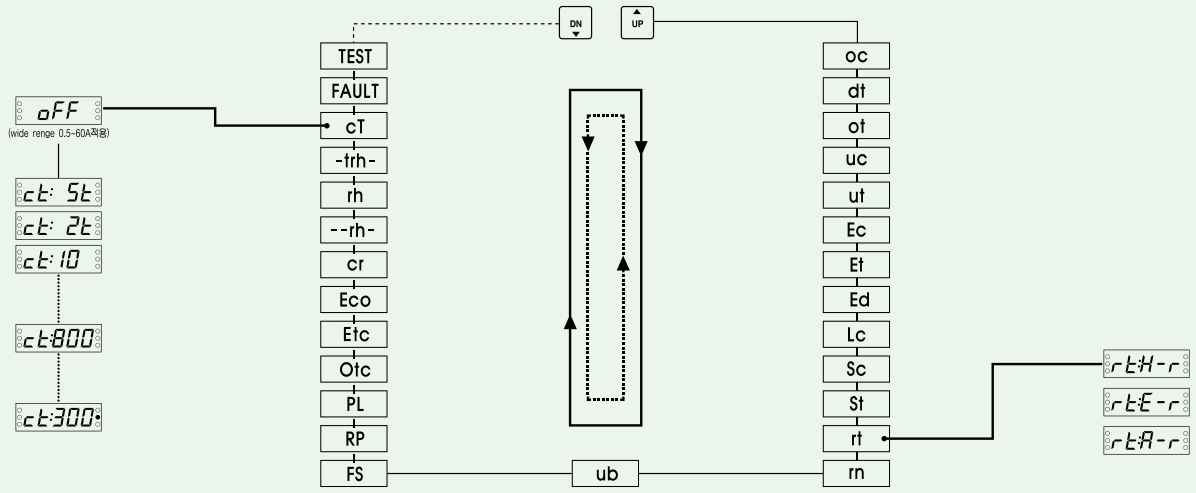

Function Setting Sequence and Setting Menu

Sequence	Function and Setting Range	Display	Description	Notes	Default
1	Over Current Setting	oc:0.50	• Can be used without any restrictions when using at 60A or less. • Must be used in combination with an external CT when using at 60A or higher, and must be set in the following order: 1.Set the OC to 5A or less. 2.Set the primary current value of the external CT in the CT Mode. 3.Return to OC Mode and set the desired over current value.	Current Setting Range Table (see p.134)	10
2	Start Delay Time Setting	dt: 10	A function to stop the operation of start-up over current, under current, lock, and stall functions. Must be set accurately. Phase loss and reverse phase function normally during the set time period.	oFF (function ignored: when using Inverse) can be set from 1~200 sec	10
3	Over Current Operation Time	Ot: 5	When using Definite: The relay operation time is set during the over current state. When using Inverse: Set after resolving the current-time characteristic curve.	Can be set from 0.2~30 sec Can be set from 1~30 Class	5
4	Under Current	uc:oFF	• Sets the desired under current (light load current) value. • This function is ignored when set to oFF.	Only a value less than the set overload current value can be set.	oFF
5	Under Current Operation Time	ut: 5	Sets the operation time of the relay for the set under current (light load). ※ This is for the Definite operation.	Can be set from 0.5~30 sec	oFF
6	Earth Fault Over Current Setting	Ec: 0.5	Indicates that earth fault over current is set to 0.5A. Once the earth fault current flow exceeds the set value, it operates after the Et (earth fault operation delay time) setting time is over. Definite operation: 0.03~10A, Inverse operation: 0.03~1A	Setting range 0.5~10A/ oFF	10
7	Earth Fault Operation Time	Et: 3	Sets the time it takes for the relay to trip due to an earth fault when the earth fault current exceeding the earth fault current set value (Ec) is detected.	Definite/Inverse 0.05, 0.1~1~10 sec	1
8	Earth Fault Operation Delay Time Setting During Start-up	Ed: 4	• Indicates that the start-up earth fault delay time is set to 4 sec, and operates 4 seconds after the earth fault current exceeding the set value begins to run. • Valid only if the Definite operation characteristic has been applied.	1~10 sec/oFF	1
9	Lock Current Setting	Lc: 8	A function to prevent the non-startable state caused by locked rotor, which will not be tripped during operation (after D-Time). Set to a multiple of the over current set value, and trips within 0.5 sec after dt.	2~10 times the over current setting/oFF	10
10	Stall Current Setting	Sc: 5	• Set to 1.5~5 times the over current set value to protect against a decrease in speed or locked rotor caused by overload during operation. • Not tripped during operation (while D-Time is in progress).		5
11	Stall Operation Time Setting	St: 5	• If Sc is set to oFF, St automatically switches to oFF. • Operates with the setting of 0.1 sec for shock protection	0.1~10 sec/oFF	5
12	Reset Method	rtH-r	Sets the reset method and auto reset time after the relay is tripped. In this MODE, press the SET/store once, and then press the Up/Down button to show H-r, E-r, and A-r. rtH-r (Hand Reset): Resets using the Reset button on the front side of the relay rtE-r (Electrical Reset): Resets by blocking the operating power supply to the relay rtA-r (Auto Reset): If this Mode is set (Store), it will auto reset 0.2 sec after the trip. If you keep pressing the Up button without pressing the store SW., 0.3 (sec)~20n (meaning 20 min) is displayed, and when your desired auto reset time appears, press Store to set it. If you want to switch to electrical reset (rtH-r) or manual reset (rtE-r), press Set once and press Up/Down SW. until the auto reset time is set to 0.3. Repeat the process of pressing it once until you find the mode you want, and set it by following the appropriate setting method.	The auto reset time setting can be set from 0.3 sec~0.9 sec~1 sec~10 sec~50~1n (min)~ 10n (min) and 20n (min) ※ 3-phase current and trip cause are displayed in circulation after auto reset.	H-r
13	Restart Limit	rn: 3	• Only applies to Auto Reset. • When the thermal protection mode is applied, it is automatically displayed as oFF. • If tripped up to the limit of the set count within 30 minutes, an additional restart is prevented. • The count of restart limit setting is voided by Hr (Hand Reset or Manual Reset).	oFF/3~10 restarts	oFF
14	Current Unbalance	Ub: 10	Detects 10% of the unbalance current against the max. phase current.	5~50%/oFF	50
15	Fail Safe (NVR) Function	FS: on	Cannot be set while operating.	ON, oFF	oFF
16	Phase Loss Function Select	PL: on	Does not auto reset when tripped (even if you selected auto reset)	ON, oFF	ON

Function Setting Sequence and Settings Menu

Sequence	Function and Setting Range	Display	Description	Notes	Default
17	RPR (Reverse Phase Relay) Function	AP: on	Does not auto reset when tripped (even if you selected auto reset)	ON, oFF	ON
18	Over Current Protection Operation Time Characteristics (select among Definite/ Inverse/Thermal Inverse protection)	Otc:dE	• Definite (dE) / Inverse (Inv) / Thermal Inverse (td) • Inverse (Inv)/Thermal Inverse (th): Operated according to the inverse time characteristic curve. • Thermal Inverse (th): Automatically enters initialization 20 min after the motor stops	dE (definite), In (Inverse) th (themal Memory Inverse)	dE
19	Earth Fault Protection Operation Time Characteristics (select between Definite/Inverse)	Etc:dE	Inverse (Inv): Refer to the characteristic curve	dE (definite), In (Inverse)	dE
20	Earth Fault Output Contact Select	Eco: a	Open contact in the normally de-energized state 57┤ ├58 GR • Cannot be set while operating.	Select contact a or b	a
21	4~20mA Current Upper Limit Setting	cr: 50	• Displayed as 4mA at 0.5A or less • Outputs 20mA if the set current runs.	Wide Range application: 0.5~60A/oFF CT Combination type: (0.5~6A) × CT ratio/oFF	oFF
22	Set Operation Time Display	--rh- 30.6	In some situations, when this mode is entered --rh- and 0030.6 (cumulative operation time out of the set operation time: 0.6 indicates 60×0.6=36 min) are alternatively shown 15 times per second, and the display switches to the current display. After the set operation time, the current of L1, L2, and L3 is automatically displayed for 5 seconds during normal operation and then a warning is given by displaying the operation alternating every 1 second. To Reset, set the above 'rh' setting to rh:oFF and set the operation time again. After the set time, the 3-phase current and elapsed time are displayed in circulation. Cannot be changed to oFF while operating.	Can be reset in rh MODE. Set rh to rh:oFF and then set to the required operation time again.	0
23	Operation Time Setting	rh:200•	• The time can be set as desired with operation time setting MODE. • During the setting, the LED of X10 on the right side of the time display is illuminated, allowing the setting to be changed in 1-hour units. • The operation time cumulative display is accumulated only during motor operation.	Off, can be set from 1~9990 hours (reset possible)	oFF
24	Total Operation Time	-trh- 303.3	When current of 0.2A or higher flows after installing the relay, the total operation time is accumulated for the integration of up to 65500 hours. If you enter this mode during operation, -trh- and 303.3 are alternatively displayed 15 times every 1 second, and the display switches to the current display. ※303.3=303 hours 18 min (0.3×60 min)	This operation time cannot be Reset.	0
25	CT Current Transformer Ratio Setting	ct: 05	Sets the primary current of the CT if an external CT is being used. That is, if the current transformer ratio is 200:5, it is set to 200.	Cannot be set during operation.	oFF
26	Trip Cause Check	FAULt	• When tripped by a certain cause while using the relay, the cause is stored to check later as needed. In this mode, by pressing the SET button, the 3 most recent trip causes are displayed in the order of Last-2nd-3nd, and the trip causes as well as the current of each phase can be checked. • When set to Auto Reset, the current circulation display during operation will be shown in the order of L1→L2→L3→ Last Trip Cause → Leakage Current (Earth Fault) → L1, during which the last trip cause is displayed for only 1 sec.	Stores the trip causes even during the recovery of electricity after power outage.	
27	Test	TEST	This mode is to check if the relay itself is in a normal state and if the sequence has been normally configured after installing the relay. 3 seconds after you enter this mode, a countdown will begin for the set ot (OC operation time), the state of EOCR will be changed to a trip state and End will be shown on the display window. This trip is also stored in the Fault Mode. That is, if you look for the last operation state again in Fault, End will be displayed.	Pressing Reset SW will return it to normal. ※You may not enter this mode during operation in order to prevent tripping.	

※Precautions: Over Current (oc) value will not be set to the same value as the under current setting (uc) or less, whereas the under current setting cannot be the same as the over current setting or higher.

1. Earth Fault Current Setting Range for Each Characteristic

Operation Time Characteristic	Definite (DEF)	Inverse (INV)
Earth Fault Current Range	0.03~10A	0.03~1A

2.Setting sequence to use 0.03~1A for Definite

a) Selecting In in Etc Mode will automatically set the range to 0.03~1A.

b) To set to Definite in a), In must be changed to dE again in Etc Mode.

Trip Cause Display and Check Method

Operation Display (trip indication)			
Trip Cause	**Trip Cause Display**	**Description**	
Over Current	-oc-	Operates upon detecting over current at L1(R) phase during operation.	Once tripped, the current for each phase can be checked by pressing the UP/DN switches.
Under Current	-uc-	Operates upon detecting under current at L2(s) phase during operation.	
Stall Trip During Startup	-Lc-	Operates upon detecting stall current during startup.	
Jam Trip During Operation	-Sc-	Tripped by jam caused by heavy load during operation, or by shock caused by mechanical shock load.	
Reverse Phase	-AP-	Tripped due to reverse phase.	
Unbalance	-Ub-	Operates upon detecting unbalance current that matches the specified setting (%) based on the max. phase current.	
Phase Loss	-PL-	Tripped due to phase loss.	
Earth Fault	-Ec-	Operates upon detecting earth fault current.	

Example Wiring Diagram

※ *Installation on the secondary inverter is recommended when using with an inverter or VSD.*

3-phase Motor Wiring Diagram (When FS setting is oFF)

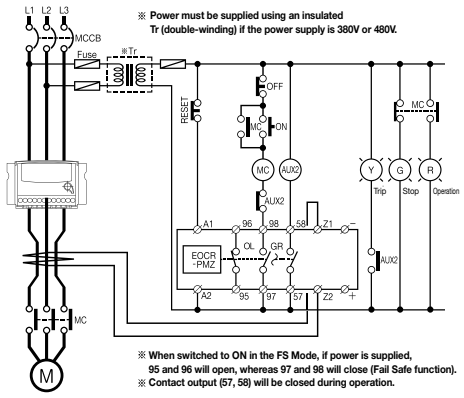

EOCR-PMZ (Hole Type)

3-phase Motor Wiring Diagram (when FS setting is ON)

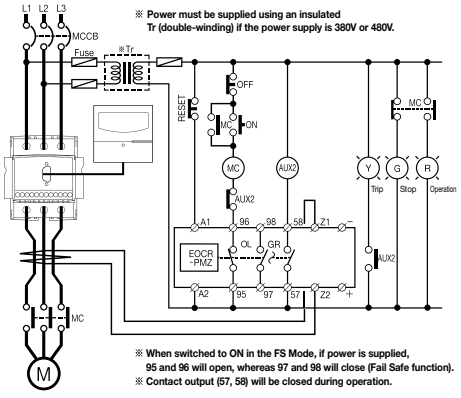

EOCR-PFZ (Terminal Type)

※ EOCR must be wired as follows:
- Terminals and electric wires must be connected in full contact when wired.
- Operating power supply must be properly connected and supplied to the terminal. It is recommended to check the wiring diagram before wiring, as EOCR burnout or system short-circuit may occur if it is incorrectly wired to the output terminal.
※ ZCT terminal must be used without a ground connection.
※ When using Star-Delta Starter (Y-△ starter), ZCT must be installed on the upper part of the main MC body and below the Main CB.

EOCR-PMZ/PFZ

I/O Terminal Configuration

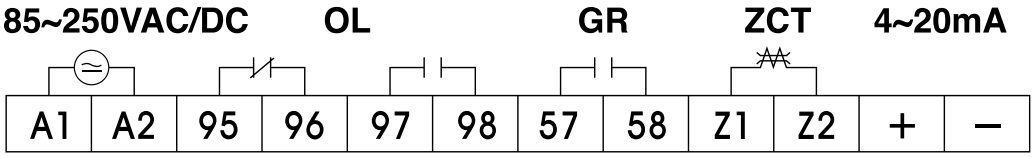

Dimensions Diagram

EOCR-PMZ

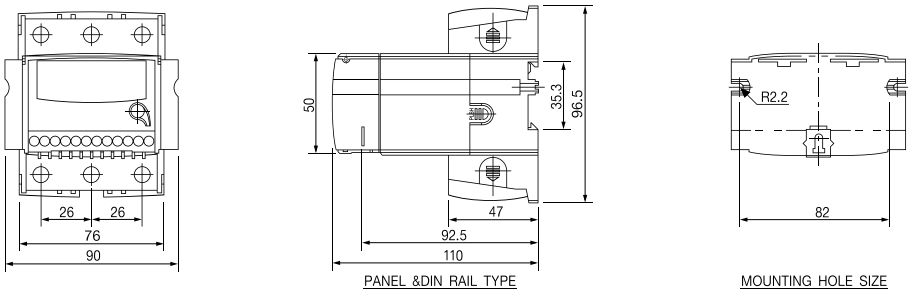

EOCR-PFZ

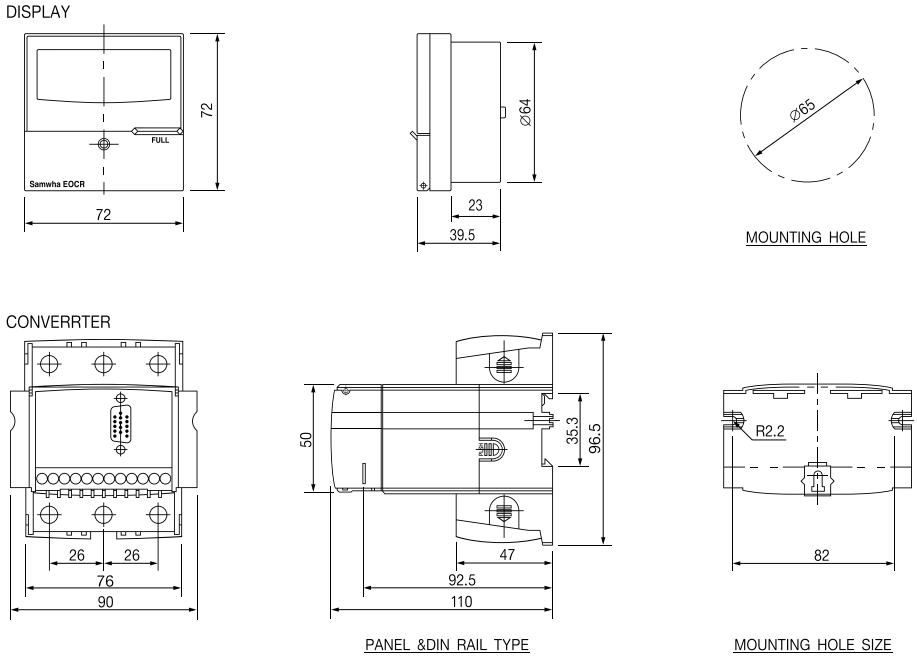

EOCR-PMZ/PFZ

Ordering Specifications

Reference			Current Range [A]	Output contact	Operating Power Supply		Converter	Notes
					Voltage [V]	Frequency [Hz]		
 EOCR-PMZ	EOCRPMZ	-WRDBW	Wide Range	b-a	DC/AC 24V	-	Window	
		-H1DBW	100:05:00	b-a	DC/AC 24V	-	Window	CT Combination
		-HHDBW	150:05:00	b-a	DC/AC 24V	-	Window	CT Combination
		-H2DBW	200:05:00	b-a	DC/AC 24V	-	Window	CT Combination
		-H3DBW	300:05:00	b-a	DC/AC 24V	-	Window	CT Combination
		-H4DBW	400:05:00	b-a	DC/AC 24V	-	Window	CT Combination
		-WRDZ7W	Wide Range	b-a	DC/AC 85~250V	50/60	Window	-
		-H1DZ7W	100:05:00	b-a	DC/AC 85~250V	50/60	Window	CT Combination
		-HHDZ7W	150:05:00	b-a	DC/AC 85~250V	50/60	Window	CT Combination
		-H2DZ7W	200:05:00	b-a	DC/AC 85~250V	50/60	Window	CT Combination
		-H3DZ7W	300:05:00	b-a	DC/AC 85~250V	50/60	Window	CT Combination
		-H4DZ7W	400:05:00	b-a	DC/AC 85~250V	50/60	Window	CT Combination
 EOCR-PFZ	EOCRPFZ	-WRDBT	Wide Range	b-a	DC/AC 24V	-	Terminal	
		-WRDZ7T	Wide Range	b-a	DC/AC 85~250V	50/60	Terminal	-
		-WRDBW	Wide Range	b-a	DC/AC 24V	-	Window	
		-H1DBW	100:05:00	b-a	DC/AC 24V	-	Window	CT Combination
		-HHDBW	150:05:00	b-a	DC/AC 24V	-	Window	CT Combination
		-H2DBW	200:05:00	b-a	DC/AC 24V	-	Window	CT Combination
		-H3DBW	300:05:00	b-a	DC/AC 24V	-	Window	CT Combination
		-H4DBW	400:05:00	b-a	DC/AC 24V	-	Window	CT Combination
		-WRDZ7W	Wide Range	b-a	DC/AC 85~250V	50/60	Window	-
		-H1DZ7W	100:05:00	b-a	DC/AC 85~250V	50/60	Window	CT Combination
		-HHDZ7W	150:05:00	b-a	DC/AC 85~250V	50/60	Window	CT Combination
		-H2DZ7W	200:05:00	b-a	DC/AC 85~250V	50/60	Window	CT Combination
		-H3DZ7W	300:05:00	b-a	DC/AC 85~250V	50/60	Window	CT Combination
		-H4DZ7W	400:05:00	b-a	DC/AC 85~250V	50/60	Window	CT Combination

Accessory 1			
Model	Reference	PIN Type	Length (M)
Cable	CABLE-15-00H	15PIN	0.5
	CABLE-15-001	15PIN	1
	CABLE-15-01H	15PIN	1.5
	CABLE-15-002	15PIN	2
	CABLE-15-003	15PIN	3
	⋮	⋮	⋮
	CABLE-15-010	15PIN	10

Accessory 2		
Model	Reference	Hole Diameter (㎜)
ZCT	ZCT-035	35
	ZCT-080	80
	ZCT-120	120

How to Order

To order an EOCR-PMZ:

E O C R P M Z – W R D Z 7 W

❶ ❷ ❸ ❹

❶	Current Range	WR	0.5~60A
		H1	100:5 3CT Combination Type
		HH	150:5 3CT Combination Type
		H2	200:5 3CT Combination Type
		H3	300:5 3CT Combination Type
		H4	400:5 3CT Combination Type
❷	Output Contact State	D	b(95-96)-a(97-98)
❸	Operating Power Supply/ Frequency	B	AC/DC24V compatible
		Z7	AC85~250V, 50/60Hz, DC compatible
❹	Converter	W	Window (Hole Type)
		T	Terminal (Terminal Type)

※ *For a CT combination type, please write an accessory code from the CT Order Codes separately.*

To order an EOCR-PFZ:

E O C R P F Z – W R D Z 7 W

❶ ❷ ❸ ❹

❶	Current Range	WR	0.5~60A
		H1	100:5 3CT Combination Type
		HH	150:5 3CT Combination Type
		H2	200:5 3CT Combination Type
		H3	300:5 3CT Combination Type
		H4	400:5 3CT Combination Type
❷	Output Contact State	D	b(95-96)-a(97-98)
❸	Operating Power Supply/ Frequency	B	AC/DC24V compatible
		Z7	AC85~250V, 50/60Hz, DC compatible
❹	Converter	W	Window (Hole Type)
		T	Terminal (Terminal Type)

※ *For a CT combination type, please write an accessory code from the CT Order Codes separately.*

※ *For cables, please write an appropriate code for the required length when ordering a main body.*

To order a ZCT:

Z C T – 0 3 5

❶

❶	Diameter	035	35m/m
		080	80m/m
		120	120m/m

To order a Cable:

C A B L E – 1 5 – 0 0 H

❶ ❷

❶	Cable Access Specification	15PIN	
❷	Cable Length	00H	0.5M
		1	1M
		01H	1.5M
		2	2M
		⋮	⋮
		10	10M

EOCR-SSD

EOCR-SSD

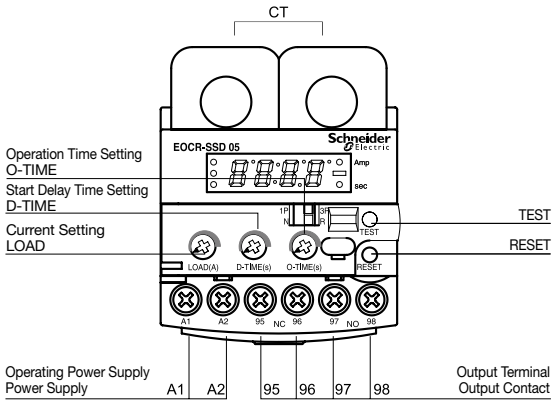

Main Features

- The compact design enables installation in a narrow space (can be replaced with an SS type on 1:1 basis)
- Accurate display of operating current via the frontal LED display (the higher current value will be displayed, whichever is higher between L1 and L3)
- LED window displays the trip cause when a trip occurs
- Accurate phase loss protection (3 sec)
- Easy application: Can select between single-phase (1P) or 3-phase (3P) using DIP SW.
- Works well with an inverter system: 20~200Hz
- Can select contact output[Fail safe(N)/Non-fail safe(R)]: Maximum convenience for sequence configuration
- Easy installation, with DIN Rail and Panel Mounting compatibility

Protection Function

Protection Function	Operation Time
Over Current	Operates after O-Time
Phase Loss	Operates within 3 sec
Locked Rotor	Immediately operates if 200% or more of the set current continues after D-Time

Trip Cause Display and Check Method

Operation Display (Trip Indication)		
Trip Cause	**Trip Cause Display**	**Description**
Over Current	o 10.0	Trips after detecting the over current of 10A during operation.
Phase Loss	PL-1	Trips by L1 (R) phase loss.
	PL-2	Trips by L2 (S) phase loss.
	PL-3	Trips by L3 (T) phase loss.
Locked Rotor	-Lc-	Trips when a stall is detected.

Specifications

Functions and Characteristics			Specifications
Current Setting	Over Current	5	0.5~6A
		30	3~30A
		60	10~60A
		60A or higher	Use 05Type in combination with an external CT
Time Setting	Start Delay Time	D-Time	1~30 sec
	Operation Time	O-Time:	0.5/1~10 sec
Reset			Manual(instant) reset/electrical reset (power supply cut)
Operation Time Characteristic	Over Current		Definite
Error Tolerance	Current		±5%
	Time		±0.2 sec
Usage Environment	Temperature	Operation	-20℃~60℃
		Storage	-30℃~80℃
	Humidity		30~85% RH without icing
Operating Power Supply	24		AC/DC24V
	110		AC110V±15%, 50/60Hz
	220		AC220V±15%, 50/60Hz
	440		AC440V±15%, 50/60Hz
Output contact	2-SPST (1a1b)		AC250V/3A resistive load
Insulation	Resistance	Between circuit and case	10㏁ at DC500V
	Withstanding Voltage	Between circuit and case	2.0kV, 60Hz for 1 min
		Between contacts	1.0kV, 60Hz for 1 min
		Between circuits	2.0kV, 60Hz for 1 min
Attachment Method			35mm DIN Rail or Panel
Electrostatic Discharge	IEC61000-4-2	Level 3 :	Air Discharge : ±8kV
			Contact Discharge : ±6kV
Radiated Electromagnetic	IEC61000-4-3	Level 3 :	10V/m, 150MHz & 450MHz
Field Disturbance			Portable Transceiver
EFT/Burst	IEC61000-4-4	Level 3 :	±2KV, 1 Min
Surge	IEC61000-4-5	Level 3 :	1.2×50㎲, ±4kV(0˚, 90˚, 180˚, 270˚)
Conducted Disturbance	IEC61000-4-6	Level 3 :	10V, 0.15~80MHz
1MHz Burst Disturbance	IEC61000-4-12	Level 3 :	2.5kV, 1MHz
Conducted Emission	EN55011	Level 3 :	Class A (Conducted & Radiated)

Function Setting Sequence and Settings Menu

- **Configure the setting as follows before operating the motor:**

1. Operating Current Setting
   - Set it on the motor's rated current, but in order to protect the machine as well as the load, check the active load current with the digital indicator under normal load state after the startup is complete, and set it to be higher (110%~125%) than the operating current by turning the LOAD knob.
2. Start Delay Time
   - ① Set it to max and start the motor.
   - ② After starting the motor, check the current while measuring the time it takes for the operating current to return to normal current. Set the start delay time to about 1 sec longer than the measured time using the D-TIME knob. (For Y-△ startup, set it to 1~2 sec longer than the full start timer)
3. Operating Time: Set the time it takes for the relay to operate from the moment the current flow exceeds the current set value using the O-TIME Knob.

Sequence	Items	Display	Setting Method	Notes
1	Over Current Setting		05 Type : 0.5A~6A 30 Type : 3A~30A 60 Type : 10A~60A	• 0.5~6A : Changes in increments of 0.1A • 3~30A : Changes in increments of 1A • 10~60A : Changes in increments of 1A
2	Start Delay Time Setting		1~30 sec	• Changes in increments of 1 sec
3	Over Current Operation Time Setting		0.5, 1~10sec	• 0.5sec • 1~10 sec (Changes in increments of 1sec)
4	TEST Function		After 3 sec + set O-Time is elapsed, displays END	After 3 sec + set O-Time, during operation.  TEST is no longer possible

TEST Function

Each set value and the health status of the relay can be checked by pressing the TEST button.

Before the motor starts		After the motor starts
The set value for each setting mode can be checked each time the TEST button is pressed. Test function is completed after going through the TEST mode, which checks the set values and inspects the health status of the EOCR itself.		Each time the TEST button is pressed, the set value for each setting mode can be checked.
0.00 ↓ RESET pressed	Current Display Displays higher current value between L1 and L2 Before startup: In=0A, after startup: In=3.85A	3.85 ↓ TEST pressed
c 4.5 ↓ RESET pressed	Current Setting Mode Current Setting (Is)=4.5A	c 4.5 ↓ TEST pressed
d 10 ↓ RESET pressed	Start Delay Time (D-TIME) Setting Mode D-TIME=10 sec	d 10 ↓ TEST pressed
o 5 ↓ RESET pressed	Operation Time (O-TIME) Setting Mode O-TIME=5 sec	o 5 ✗ TEST pressed
TEST ↓ TEST 3 sec + set O-Time elapsed	Self-TEST begins	Does not perform in Relay Test mode in order to prevent a trip accident during operation. ⇩
End ↓ RESET pressed	Self-TEST in progress Self-TEST completed After setting O-TIME, the contact of inner Relay is passed and the self-TEST is completed.	Returns to operating current display mode after 10~20 sec in any mode ↓
0.00	Returns to current display mode if the Reset button is pressed	3.85

EOCR-SSD

Over Current Operation Time Characteristic Curve

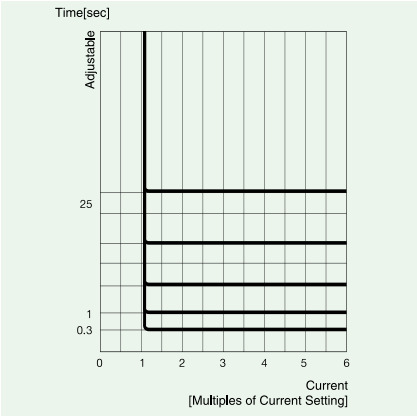

Table 1. Over Current Protection Definite Operation Characteristic Curve

Example Wiring Diagram

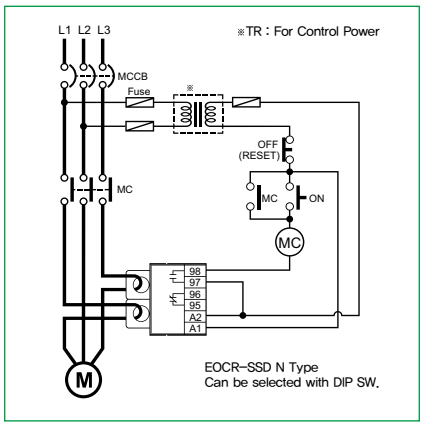

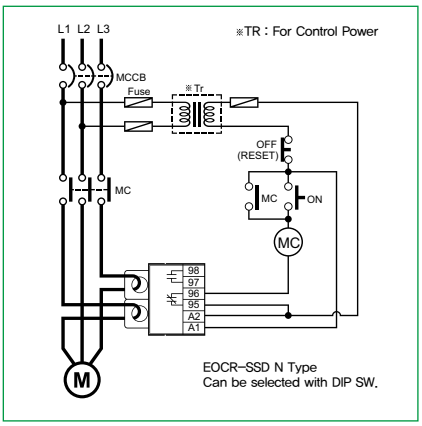

I/O (Input/Output) Terminal Diagram

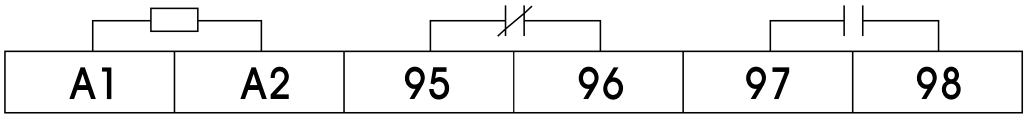

Dimensions Diagram

EOCR-SSD

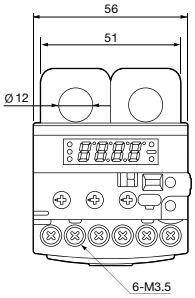

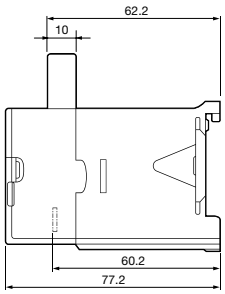

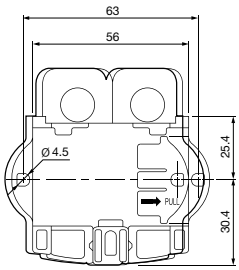

DIN RAIL & MOUNTING HOLE SIZE

EOCR-SSD

Ordering Specifications

Reference			Current Range [A]	Output Contact	Operating Power Supply		Notes
					Voltage [V]	Frequency [Hz]	
	EOCRSSD	-05DB	5	b-a	DC/AC 24V	-	-
		-30DB	30	b-a	DC/AC 24V	-	-
		-60DB	60	b-a	DC/AC 24V	-	-
		-05DF7	5	b-a	AC 110V	50/60	-
		-30DF7	30	b-a	AC 110V	50/60	-
		-60DF7	60	b-a	AC 110V	50/60	-
		-05DM7	5	b-a	AC 220V	50/60	-
		-30DM7	30	b-a	AC 220V	50/60	-
		-60DM7	60	b-a	AC 220V	50/60	-
		-05DR7	5	b-a	AC 440V	50/60	-
		-30DR7	30	b-a	AC 440V	50/60	-
		-60DR7	60	b-a	AC 440V	50/60	-
		-D1DB	100:05:00	b-a	DC/AC 24V	-	Rectangular CT Combination
		-DHDB	150:05:00	b-a	DC/AC 24V	-	Rectangular CT Combination
		-D2DB	200:05:00	b-a	DC/AC 24V	-	Rectangular CT Combination
		-D3DB	300:05:00	b-a	DC/AC 24V	-	Rectangular CT Combination
		-D4DB	400:05:00	b-a	DC/AC 24V	-	Rectangular CT Combination
		-D1DF7	100:05:00	b-a	AC 110V	50/60	Rectangular CT Combination
		-DHDF7	150:05:00	b-a	AC 110V	50/60	Rectangular CT Combination
		-D2DF7	200:05:00	b-a	AC 110V	50/60	Rectangular CT Combination
		-D3DF7	300:05:00	b-a	AC 110V	50/60	Rectangular CT Combination
		-D4DF7	400:05:00	b-a	AC 110V	50/60	Rectangular CT Combination
		-D1DM7	100:05:00	b-a	AC 220V	50/60	Rectangular CT Combination
		-DHDM7	150:05:00	b-a	AC 220V	50/60	Rectangular CT Combination
		-D2DM7	200:05:00	b-a	AC 220V	50/60	Rectangular CT Combination
		-D3DM7	300:05:00	b-a	AC 220V	50/60	Rectangular CT Combination
		-D4DM7	400:05:00	b-a	AC 220V	50/60	Rectangular CT Combination
		-D1DR7	100:05:00	b-a	AC 440V	50/60	Rectangular CT Combination
		-DHDR7	150:05:00	b-a	AC 440V	50/60	Rectangular CT Combination
		-D2DR7	200:05:00	b-a	AC 440V	50/60	Rectangular CT Combination
		-D3DR7	300:05:00	b-a	AC 440V	50/60	Rectangular CT Combination
		-D4DR7	400:05:00	b-a	AC 440V	50/60	Rectangular CT Combination

EOCR-SSD

How to Order

To order an EOCR-SSD:

E O C R S S D – 0 5 D M 7

❶ ❷ ❸

❶	**Current Range**	**5**	0.5~6A
		30	3~30A
		60	10~60A
❷	**Output Contact State**	**D**	b (95-96), a (97-98)
❸	**Operating Power Supply/ Frequency**	**B**	AC/DC24V compatible
		F7	AC110V, 50/60Hz
		M7	AC220V, 50/60Hz
		R7	AC440V, 50/60Hz

※ *For a CT combination type, please write an accessory code from the CT Order Codes separately.*

EOCR-3DE/FDE

Digital Over Current Relay

EOCR-3DE Built-in Panel

■ Hole Type

EOCR-FDE Embedded Panel

■ Terminal Type

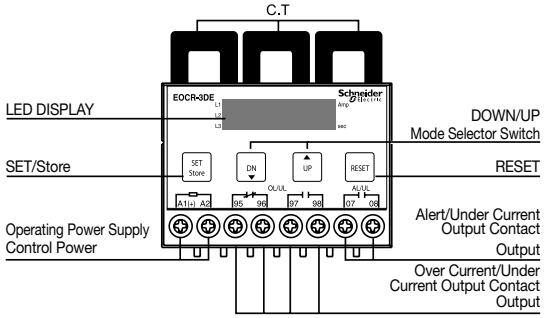

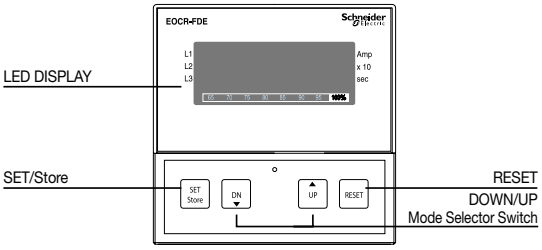

Main Features

- Built-in MCU (Micro Controller Unit)
- Real Time Processing/Higher Precision
- Over Current Protection Range : 0.5~60A, Wide Range Protection (with an external CT, 1~960A)
- Under Current Protection Range : The set over current or less
- Operation Time Characteristics: Definite - 0.5~60A (external CT combination for 60A or higher), Inverse - 0.5~10A (use an external CT combination for 11A or higher)
- Under Current Trip Output
  - Under Current output is set to be shared with the OC output in the factory default settings. However, if "U" is selected in “ALo” Mode, “AL” Mode automatically switches to oFF(--) and ALoutput (07┤├08) automatically converts to output contact for under current (UC).
- Digital Display
  - 3-phase Current Auto Circulation Display: Digital Ammeter (every 5 sec for each phase) / fixed display on 1 phase by manual circulation
  - Trip Cause Digital Display: Easy Troubleshooting
- Last Trip Cause Check Function: Can check the last 3 trip causes and current at the occurrence of each trip. Available even during the recovery of electricity after a power outage.
- Manual (instant)/electrical (remote) reset
- Fail Safe function (FS:ON)
  - Self-diagnosis function
  - When power is supplied to the relay, the relay is normally energized if it is in a normal condition (selectable in setting)
- Can be applied in various installation environments, with both terminal and hole types available
- Works well with a frequency converting device system such as an inverter: Frequency contingency range of 20~400Hz

Protection Functions and Characteristics

Protection Function		Operation Time
Over Current		Operates based on the set ot
Under Current		Operates based on the set ut
Phase Loss		Within 3 sec
Reverse Phase		0.1~0.3 sec
Unbalance		Within 8 sec
Locked Rotor	**Lock**	Operates within 0.5 sec after dt (Definite operation)
	Stall	0.5, 1~10 sec (Definite operation)

EOCR-3DE/FDE

Digital Over Current Relay

Specifications

Functions and Characteristics			Specifications
Current Setting	Over Current		Refer to current setting range table
	Under Current		0.5~59A / oFF (with an external CT : 800A or less)
	Unbalance		5%~50% (Phase current unbalance ratio) / oFF
Time Setting	Start Delay Time (dt)		1~200 sec (Definite), 0~200 sec (Inverse)
	Operation Time (ot)		0.5~30 sec (Definite), 1~30 sec (Inverse)
Reset			Manual (Instant) Reset/Electrical Reset
Operation Time Characteristic	Over Current		Select Definite/Inverse
			Refer to the Notes on Current Setting and External CT Combination
	Under Current		Definite
Error Tolerance		Current	I<1A : ±0.05A, I≥1A : ±5%
		Time	t≤3s : ±0.2s, t〉3s : ±5%
Usage Environment	Temperature	Operation	-20℃~60℃
		Save	-30℃~80℃
	Humidity		30~85% RH (with no dew condensation)
Operating Power Supply	Terminal type		AC220/110V
			- DC/AC85~250V, 50/60Hz
	Hole type		- AC220V : ±15%, 50/60Hz
			- AC110V : ±15%, 50/60Hz
			- DC/AC 24V
Output Contact	OC/UC	2-SPST	AC250V/3A Resistive Load
	AL/UC	1-SPST	AC250V/3A Resistive Load
Insulation Resistance	Between circuit and case		10MΩ or higher at 500VDC
Insulation Withstanding Voltage	Between circuit and case		2.0KV 60Hz for 1 min
	Between contacts		1.0kV 60Hz for 1 min
	Between circuits		2.0KV 60Hz for 1 min
Installation Method			35mm DIN Rail or Panel

Over Current Operation Time Characteristic Curve

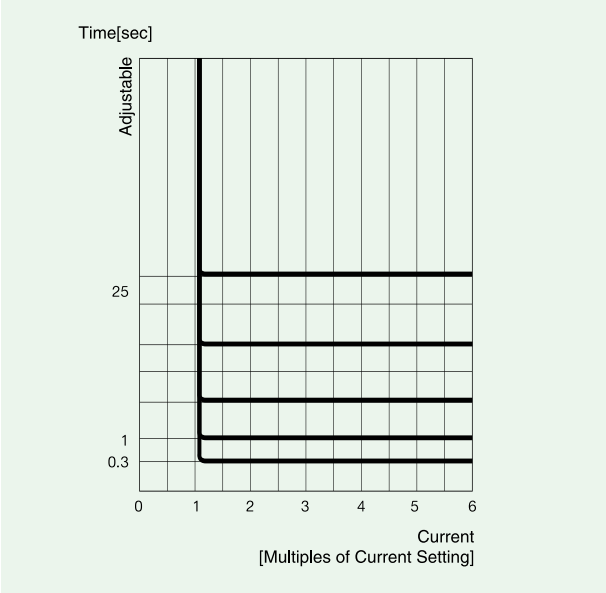

Table 1. Over Current Protection Definite Operation Characteristic Curve

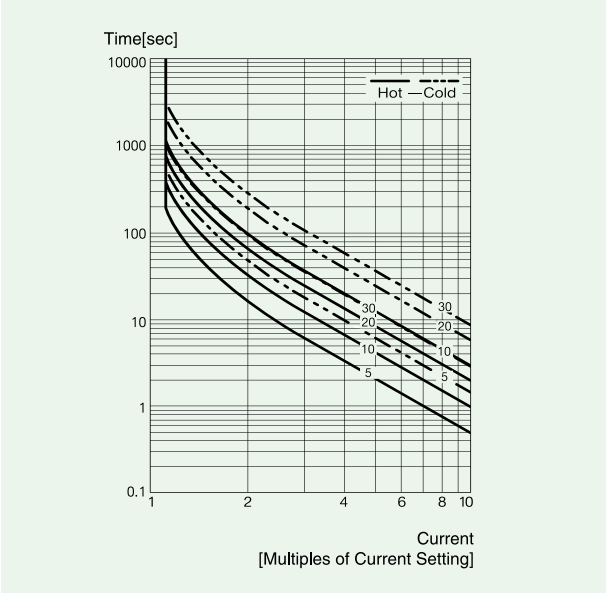

Table 2. Over Current Protection Inverse Operation Characteristic Curve (0.5~10A, external CT combination)

Current Setting Range Table

Setting Range	Number of CT Holes	External CT Current Transformer Ratio	CT Setting	Notes
0.5~60A	1	No CT combination	oFF	Wide Range
0.25~5.0A	2 Holes	No CT combination	2t	
0.1~2.0A	5 Holes	No CT combination	5t	
1~12A	1	10:05	10	
1.5~18A	1	15:05	15	
2.0~24A	1	20:05	20	
2.5~30A	1	25:05:00	25	
3.0~36A	1	30:05:00	30	
4.0~48A	1	40:05:00	40	
5~60A	1	50:05:00	50	
6~72A	1	60:05:00	60	
7.5~90A	1	75:05:00	75	
10~120A	1	100:05:00	100	
12~144A	1	120:05:00	120	
15~180A	1	150:05:00	150	
20~240A	1	200:05:00	200	
25~300A	1	250:05:00	250	
30~360A	1	300:05:00	300	
40~480A	1	400:05:00	400	
50~600A	1	500:05:00	500	
60~720A	1	600:05:00	600	
75~900A	1	750:05:00	750	
80~960A	1	800:05:00	800	

Display Front View

Automatically displays the operating current of 3 phases with the phase display every 5 sec in circulation, without additional button input.

• LED Display

EOCR-3DE Type

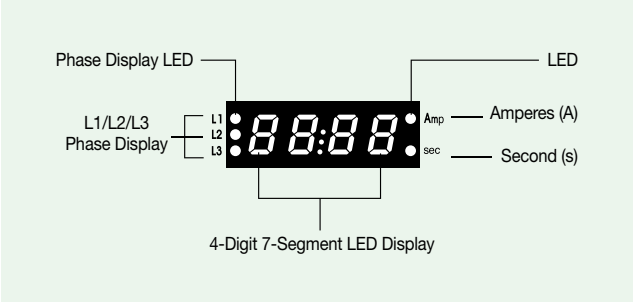

EOCR-FDE Type

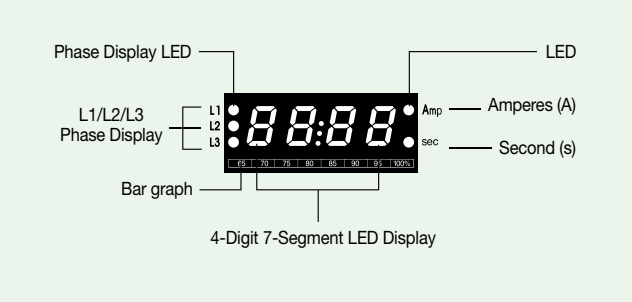

7-segment LED

A large font and a comfortable background color are used to prevent visual interference caused by reflections from the control panel in any direction.

Bar graph (for FDE only)

- Allows you to see the load status of the motor by showing the ratio of the present operating current to the set OC (Over Current).
- If you set the OC set value to the rated current of the motor, the percentage (%) shown on the bar graph will indicate the load factor of the motor.

3-phase Digital Current System Function

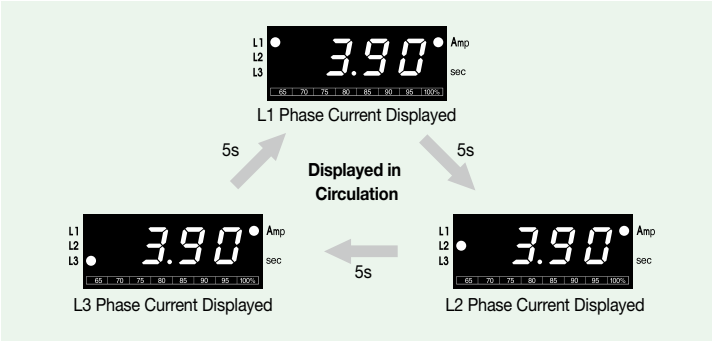

※ Press the SET (Store) button once during operation to view the manual circulation display instead of auto circulation display. Every time you press the SET (Store) button while in manual circulation mode, the display changes in the order specified above, allowing you to lock on the current of a certain phase for focused management.

※ Press the Reset button once to switch back to the auto circulation display.

Button Switch Functions and Setting Sequence

Mode	DN ▼ ▲ UP	Press the Up/Down buttons to find the function to set.
Set	SET Store	This mode indicates the start of the setting. When this button is pressed once, the corresponding value or characters flicker 5 times, during which you should continue the setting process. If there is no input for 30 seconds, it will be reset and you will have to press this button again to adjust the settings.
Adjust	DN ▼ ▲ UP	Press the Up/Down buttons to select the necessary value or characters.
Store	SET Store	When the SET (store) button is pressed once, the selected value or characters are stored and the flickering stops at the same time.
Reset	RESET	Reset button is used to return to the initial state. Once the setting is done, press the Reset button or leave it for 30 seconds to complete the setting.

※ Manual Circulation Display

- *If you press the Set (Store) button during operation, the display of 3-phase current is switched from auto circulation display to manual circulation display.*
- *Once the original L1 phase is displayed, every time you press it, the phase display will change in the order of L2→L3→L1 phase. Press Reset to return to the auto circulation display state.*

※ Trip Cause Check

- *After pressing the Up/Down buttons to enter "Trip" Mode, press the Set/Store button once to display the last trip cause. Every time the Up button is pressed, the current at each phase (L1, L2, L3) at the time of the trip will be displayed. Press it once more to check the second-last trip cause. The method for checking subsequent fault causes and current during operation is the same as the one used for checking the last trip cause.*

• Setting sequence

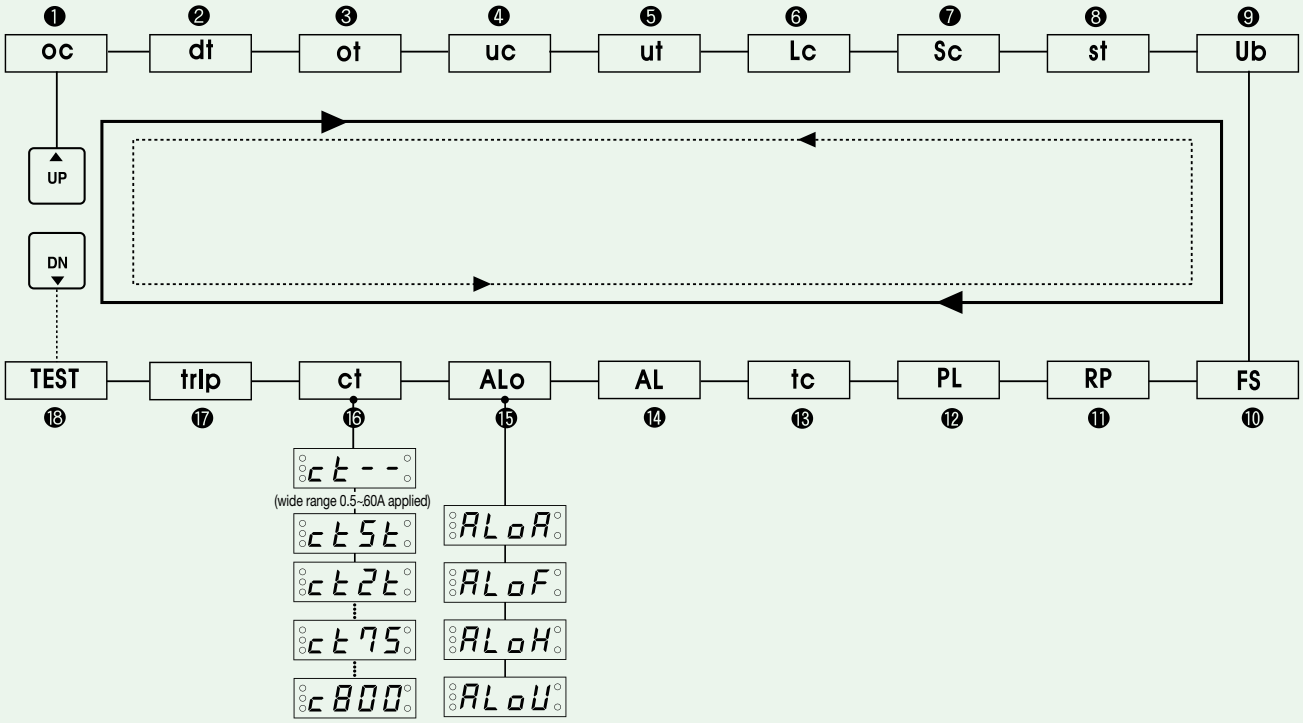

- Press the UP/Down buttons to find the Mode to set.
- To find ot in this figure, press the UP SW button 3 times if you are rotating the sequence of modes in a clockwise direction, then ot will appear in the display window.

Function Setting Sequence and Setting Menu

Sequence	Settings	Display	Description	Setting Range	Default
1	Over Current Setting	oc 0.5	• Set your desired over current value. • Set it higher (100%~125%) than the active load current (operating current). • Current of 0.4A or higher can be displayed, but setting and operation are only available at the current of 0.5A or higher. • 0.5~10A: Changes in increments of 0.1A, 10~60A: Changes in increments of 1A • Cannot set to the UC set value or less. • For Inverse, the setting cannot exceed 10A. • When setting the CT Ratio, the protection set value converted based on the secondary CT (=primary active current/CT Ratio) must be set in "OC" Mode before setting the Ratio in "CT" Mode. • Check the current value in "OC" Mode after setting the CT Ratio, and you will recognize that it is automatically converted to the active current value based on the primary CT. • Afterwards, the active current value can be changed to any value in the "OC" Mode for the identical CT ratio.	Current Setting Range Table	10
2	Start Delay Time Setting	dt 1.0.	• This function stops the operation of start-up over current, under current, and lock functions. Must be set accurately. • Phase loss and reverse phase still work normally during the set time period. • 1~100 sec: Changes in increments of 1 sec. • 100~200 sec: Changes in increments of 10 sec.	• Can be set from 1~200 sec oFF (Mode display: - -)	10
3	Over Current Operation Time Setting	ot 1.0.	• Definite/Inverse can be selected and set in the tc mode. • 0.2~1 sec: Changes in increments of 0.1 sec. • 1~30 sec: Changes in increments of 1 sec.	• Can be set from 0.5~0.9-1…sec (definite time) • Can be set from 1~30 sec (inverse time)	5
4	Under Current Setting	uc 0.5	• Sets the preferred under current (light load current) value. • Cannot be the same as OC set value or higher. • 0.5~10A: Changes in increments of 0.1A. • 10~59A: Changes in increments of 1A.	• Can be set from 0.5~59A oFF (Mode display: - -)	--
5	Under Current Operation Time Setting	ut 1.0.	• Sets the operation time of the relay for the set under current (light load). • Definite Operation • 0.5~1 sec: Changes in increments of 0.1 sec. • 1~30 sec: Changes in increments of 1 sec.	Can be set from 0.5~30 sec	--
6	Lock (Stall) Current Setting: A multiple of OC set value.	Lc 7	• Set as a multiple of over current set value. • Definite Operation • Operates within 0.5 sec if the current exceeds the set multiple value after dt. • Does not operate during operation.	• 0.5~10A: 2~10 times the over current setting • 11A or higher: Automatically reduced to an appropriate multiple value. The upper value set for "Lc" is "[Lc" upper value=100/OC set value], during which "Lc" can be changed to the range of upper value or below. • oFF (Mode display: - -)	10
7	Stall (heavy load during operation) or Shock (mechanical shock) Current Setting: A multiple of OC Set Value	Sc 2.0	• Set to 1.5 times the over current set value. • Definite Operation • If the current flow exceeds the multiple of the SC set value due to heavy load during normal operation after startup, it will be tripped after the time set for St elapses.	• 0.5~10A : 1.5~5 times more • 11A or higher: Automatically reduced to an appropriate multiple value. The upper value set for "Sc" is "[Sc" upper value=100"/ OC" set value], during which "Sc" can be changed to the range of upper value or below. • oFF(Mode display: --)	5
8	Stall Operation Time Setting	St 5.0.	• When Sc is set to oFF(--), St is also automatically displayed as oFF(--). • Operates with the setting of 0.5 sec for shock protection	• 0.5, 1~10 sec oFF (Mode display: - -)	5
9	Current Unbalance Setting	Ub 10	• Sets the unbalance ratio of the phase current by the equation of [(Max. phase current - min. phase current)/ max. phase current] ×100〉set %	• 5~50% oFF (Mode display: - -)	50
10	Fail Safe (NVR) Function	FSon	• Cannot be set while operating.	ON, OFF (Mode display: - -)	OFF

Sequence	Settings	Display	Description	Setting Range	Default
11	RPR (Reverse Phase Relay) Function	APon	• Reverse phase function is disabled when set to oFF(--).	ON, oFF (Mode display: - -)	ON
12	Phase Loss Function Select	PLon	• Can be set to oFF(--). (Set to off for single-phase)	ON, oFF (Mode display: - -)	ON
13	Over Current Protection Operation Time Characteristics (select Definite/ Inverse)	tcdE	• tc (Time-Current Characteristic) : dE, In - Definite (dE): Operates based on operation characteristics on Table 1. - Inverse (In): Operates based on characteristics curve in Table 2. - When set to 11A or higher, dE is automatically applied. ※ Once Inverse (tdIn) is selected and operation delay time (dt) is set, hot curve will be applied after dt. When using inverse time for a longer startup time, it is possible to set faster operation time on overload during operation.	• dE(definite), In(Inverse) • 0.5~10A: Can select dE/In • 11A or higher: dE is used (not when using external CT)	dE
14	Alert Rate Setting	AL95	• Setting within the 90% range of OC set value is recommended. • When selecting "U" from “ALO”, “AL” is displayed as oFF(--).	50%~100% of OC set value/oFF	100
15	Alert Output Format	ALo.A	• Output Format “A” (Ampere relay function): Energized upon current detection. “F” (Flicker): Flickers. “H” (Holding) : ON-oFF output format “U” (Under current Mode) : AL output is converted to under current output. • Cannot be set while operating.	Output Format of 07-08 contact when the current exceeds the alert set value	A--
16	CT Current Transformer Ratio Setting	ct75	• Automatically sets to the wide range (0.5~60A) mode if set to oFF(--). • Cannot set the CT scale while operating. • 5t: Protectable at 0.12A or higher • 2t: Protectable at 0.3A or higher • To set the CT Ratio, the target active current value for protection should be converted to the secondary value (=active current value/CT ratio), and the resulting value must first be set in “OC” Mode. (see the “OC” Mode setting guide for details)	OFF-5t, 2t, 10-15-25-30-40-50-60-75-100-120-150-200-250-300-400-500-600-750-800	--
17	Trip Cause Check	tr 1P	• Displayed in the order of the Last-2nd Last-3rd Last trip. Trip causes and the current for each phase can be checked.	Can check from the 1st to the 3rd	
18	TEST Function	TEST.	TEST. ⬇ 3 sec ot 10. ⬇ 10 sec End	Does not convert to Test while operating. (to prevent tripping during operation)	

Inspection after installing EOCR should be performed as follows:
- Confirm that the wiring has been performed properly.
- Press the Down button once before starting the motor to show the Test display. 3 seconds after it is displayed, a countdown of the set ot value will start. If End is displayed after the countdown, it is normal.
- EOCR is designed to block the test function during operation to prevent unnecessary trip accidents.
- The Test function checks to ensure the health status of EOCR itself and the operational circuit after installing EOCR is normal.

How to Set Current/Time

Protects the motor by setting the current and time appropriately, as follows:

- **Notes on Current Setting**

1. Wide Range: If CT is set to --(oFF), it switches to the wide range. The range of working current can go up to 0.5A~60A for Definite (set to tcdE), and up to 0.5A~10A for Inverse (set to tcln).

   ※ *You can select either Definite or Inverse if the OC set value is 10A or lower. However, if the OC set value is 10A or higher, the Inverse setting is not allowed. Similarly, OC set value cannot be 10A or higher when it is set to Inverse (tcln).*

2. External CT Combination
   - CT ratio cannot be adjusted if OC (Over Current) set value is 6A or higher.
   - CT setting sets the primary current value of an external CT. Once set, it is displayed as CT75 if the CT primary current is 75:5 or lower during the setting, and displayed as c100 if it is 100:5 or higher.
   - The current range available when using an external CT is calculated as follows: CT ratio (i.e., 100:5=100/5=20)×0.5-6A=10-120A

   ※ *• Once the current transformer ratio of CT is set, OC setting will not display the letter "c" in "OC"; instead, it will be displayed as o10.8 without the "c".*
   • Similarly, the under current setting will not display "c" of "UC" and will be displayed as u9.80, for example.

   - Over Current Setting Sequence
   - •Set the OC (Over Current) value to 6A or lower.
   - •Set the CT ratio. The OC (Over Current) that is already set will be automatically converted to the value multiplied by the current transformer ratio of the CT (20 times if 100:5). For example, if OC is set at 4A and CT at 200, the over current setting is automatically set to 4×40=160A and saved.
   - •Simply check the over current setting and set it appropriately for the load.

3. Operation Time
   - Definite: Set the time it takes for the current exceeding the set point to start to flow and trip the relay to ot.
   - Inverse: Decide when the relay will be tripped in terms of after how much time has elapsed and after what multiple value of the set current flows with reference to the current-time characteristic curve, and complete the setting. Consider the figure below as an example. If ot is set to 5 and the current flow is 5 times the regular current, the relay will be tripped at 2 sec; if ot is set to 10, at 4 sec.

- **Under Current Protection**

1. It is more convenient to set to UC--(oFF) to prevent malfunction during startup for a test operation. Even during the test operation, it operates with no-load because the current flow is only one-third the rated current during no-load.
2. During normal operation, check the current in no-load state, and set the current to be slightly higher than the current in no-load state (to prevent no-load operation).
3. If under current function is unnecessary, the function is removed if set to UC--(oFF), and the over current operation time ut is removed as well.

Alert Operation Characteristics Table

Load Status / "ALo Setting"	Load Interruption	In Operation	Normal Operation	Operates at the Alert Set Value or a higher value	Trip
Aux"A"					
Flicker "F"				1 sec	
Hold "H"				1 sec	

- ALo"A": Ampere Relay function (energized and closed when current flows)
- ALo"F": Flickering function (closes when current flows and repeats closing and opening for the current equal to the AL set value or higher)
- ALo"H": ON~OFF Output Format function (closes at the AL set value or higher)
- ALo"U": AL output converts to "UC" (under current) output contact

- Output format and terminal configuration if ALo"A", ALo"F", or "ALo"H" is selected

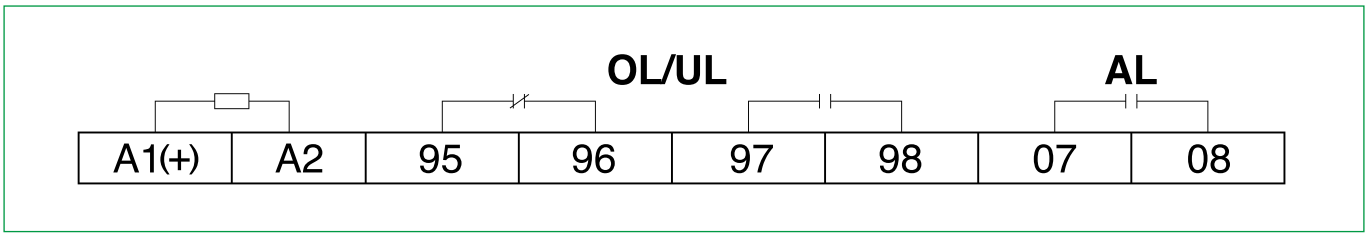

- Output terminal configuration if ALo"U" is selected: ALo function is not available, and is converted to the output for under current

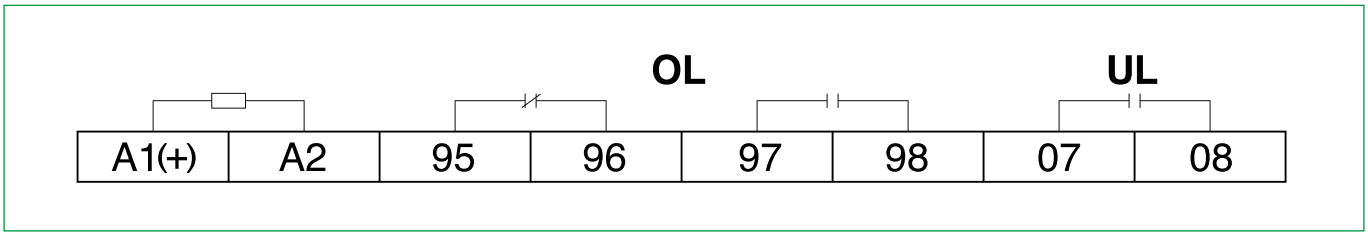

Trip Cause Display and Check Method

Displays all kinds of trip causes and fault current values on the digital display window, enabling easier maintenance and faster responses to accidents.

Trip Cause	Display	Description	Notes
Over Current	-oc-	Detects over current at L1 (R) phase during operation and indicates operation.	Capable of checking the current for each phase by pressing the switch after trip
Under Current	-uc-	Detects under current at L2 (S) phase during operation and indicates operation.	
Phase Loss	-PL-	Indicates operation due to a phase loss at L2 (S) phase.	
Reverse Phase	-AP-	Displays reverse phase trip.	
Unbalance	-Ub-	Indicates that it operates due to a phase unbalance calculated by [(max. phase current-min. phase current) / max. phase current]×100 > set %, and that min. current at the time is at L1 (R) phase.	
Locked Rotor	-Lc-	Detects stall and indicates operation.	
Jam Trip During Operation	-Sc-	Displays trip due to stall or mechanical shock caused by heavy load at L3 (T) phase during operation.	

EOCR-3DE/FDE

Digital Over Current Relay

Example Wiring Diagram

EOCR installation must be wired as shown below.

-Installation on either the frontal or rear part of the MC is allowed.

3-wire Diagram on EOCR-3DE for Motor Protection (FS: oFF setting)

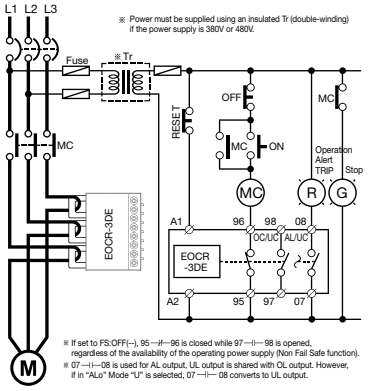

※ *OL output 95 ⊣/⊢ 96 is opened and 97 ⊣ ⊢ 98 is closed when FS is set to ON and operating power is supplied to A1 and A2*

3-wire Diagram on EOCR-FDE for Motor Protection (FS: oFF setting)

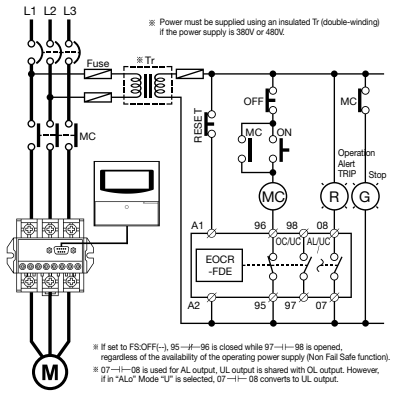

※ *OL output 95 ⊣/⊢ 96 is opened and 97 ⊣ ⊢ 98 is closed when FS is set to ON and operating power is supplied to A1 and A2.*

I/O Terminal Configuration

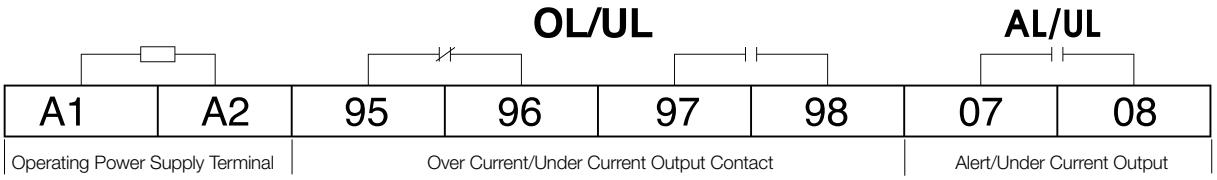

※ *The operating power supply must be connected to operating power supply terminals (A1, A2) and the specified operating voltage should be applied.*

EOCR-3DE/FDE

Digital Over Current Relay

Dimensions Diagram

EOCR-3DE

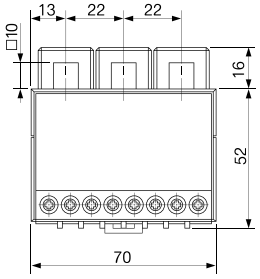

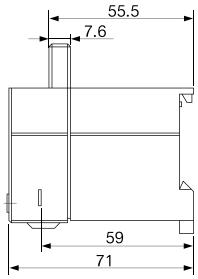

DIN RAIL TYPE

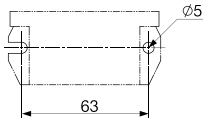

BRACKET HOLE SIZE

EOCR-FDE

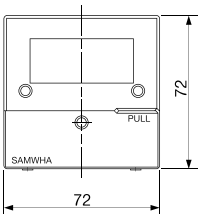

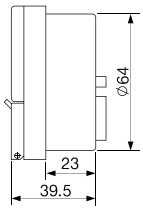

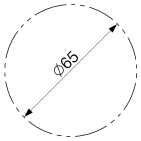

MOUNTING HOLE SIZE

EOCR-FDE (Terminal Type)

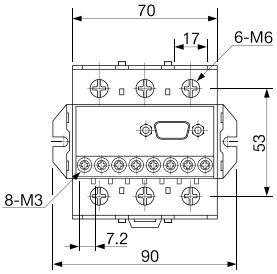

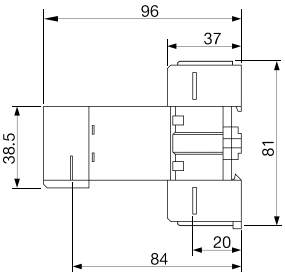

PANEL & DIN RAIL TYPE

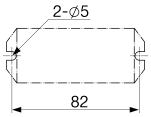

MOUNTING HOLE SIZE

EOCR-FDE (Hole Type)

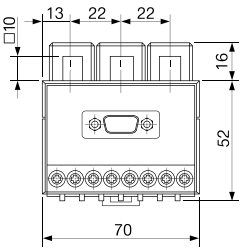

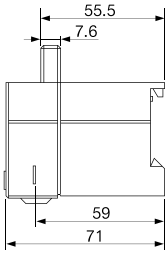

DIN RAIL TYPE

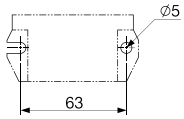

BRACKET HOLE SIZE

EOCR-3DE/FDE

Digital Over Current Relay

Ordering Specifications

Reference			Current Range [A]	Output contact	Operating Power Supply		Converter	Notes
					Voltage [V]	Frequency [Hz]		
 EOCR-3DE	EOCR3DE	WRDB	Wide Range	b-a	DC/AC 24V	-	-	-
		H1DB	100:05:00	b-a	DC/AC 24V	-	-	CT Combination
		HHDB	150:05:00	b-a	DC/AC 24V	-	-	CT Combination
		H2DB	200:05:00	b-a	DC/AC 24V	-	-	CT Combination
		H3DB	300:05:00	b-a	DC/AC 24V	-	-	CT Combination
		H4DB	400:05:00	b-a	DC/AC 24V	-	-	CT Combination
		WRDF7	Wide Range	b-a	AC 110V	50/60	-	-
		H1DF7	100:05:00	b-a	AC 110V	50/60	-	CT Combination
		HHDF7	150:05:00	b-a	AC 110V	50/60	-	CT Combination
		H2DF7	200:05:00	b-a	AC 110V	50/60	-	CT Combination
		H3DF7	300:05:00	b-a	AC 110V	50/60	-	CT Combination
		H4DF7	400:05:00	b-a	AC 110V	50/60	-	CT Combination
		WRDM7	Wide Range	b-a	AC 220V	50/60	-	-
		H1DM7	100:05:00	b-a	AC 220V	50/60	-	CT Combination
		HHDM7	150:05:00	b-a	AC 220V	50/60	-	CT Combination
		H2DM7	200:05:00	b-a	AC 220V	50/60	-	CT Combination
		H3DM7	300:05:00	b-a	AC 220V	50/60	-	CT Combination
		H4DM7	400:05:00	b-a	AC 220V	50/60	-	CT Combination
 EOCR-FDE (Hole Type)  EOCR-FDE (Terminal Type)	EOCRFDE	WRDBW	Wide Range	b-a	DC/AC 24V	-	Window	-
		H1DBW	100:05:00	b-a	DC/AC 24V	-	Window	CT Combination
		HHDBW	150:05:00	b-a	DC/AC 24V	-	Window	CT Combination
		H2DBW	200:05:00	b-a	DC/AC 24V	-	Window	CT Combination
		H3DBW	300:05:00	b-a	DC/AC 24V	-	Window	CT Combination
		H4DBW	400:05:00	b-a	DC/AC 24V	-	Window	CT Combination
		WRDF7W	Wide Range	b-a	AC 110V	50/60	Window	-
		H1DF7W	100:05:00	b-a	AC 110V	50/60	Window	CT Combination
		HHDF7W	150:05:00	b-a	AC 110V	50/60	Window	CT Combination
		H2DF7W	200:05:00	b-a	AC 110V	50/60	Window	CT Combination
		H3DF7W	300:05:00	b-a	AC 110V	50/60	Window	CT Combination
		H4DF7W	400:05:00	b-a	AC 110V	50/60	Window	CT Combination
		WRDM7W	Wide Range	b-a	AC 220V	50/60	Window	
		H1DM7W	100:05:00	b-a	AC 220V	50/60	Window	CT Combination
		HHDM7W	150:05:00	b-a	AC 220V	50/60	Window	CT Combination
		H2DM7W	200:05:00	b-a	AC 220V	50/60	Window	CT Combination
		H3DM7W	300:05:00	b-a	AC 220V	50/60	Window	CT Combination
		H4DM7W	400:05:00	b-a	AC 220V	50/60	Window	CT Combination
		WRDBT	Wide Range	b-a	DC/AC 24V	-	Terminal	-
		WRDZ7T	Wide Range	b-a	DC/AC 85~250V	50/60	Terminal	-

Accessory 1			
	Reference	PIN Type	Length (M)
Cable	CABLE-15-00H	15PIN	0.5
	CABLE-15-001	15PIN	1
	CABLE-15-01H	15PIN	1.5
	CABLE-15-002	15PIN	2
	CABLE-15-003	15PIN	3
	⋮	⋮	⋮
	CABLE-15-010	15PIN	10

EOCR-3DE/FDE

Digital Over Current Relay

How to Order

To order an EOCR-3DE:

E O C R 3 D E – W R D Z 7

❶ ❷ ❸

❶	Current Range	WR	0.5~60A
		H1	100:5 3CT Combination Type
		HH	150:5 3CT Combination Type
		H2	200:5 3CT Combination Type
		H3	300:5 3CT Combination Type
		H4	400:5 3CT Combination Type
❷	Output Contact State	D	b(95-96)-a(97-98)
❸	Operating Power Supply/ Frequency	B	AC/DC24V Compatible
		F7	AC110V, 50/60Hz
		M7	AC220V, 50/60Hz

※ *For a CT combination type, please write an accessory code from the CT Order Codes separately.*

To order an EOCR-FDE:

E O C R F D E W R D Z 7 W

❶ ❷ ❸ ❹

❶	Current Range	WR	0.5~60A
		H1	100:5 3CT Combination Type
		HH	150:5 3CT Combination Type
		H2	200:5 3CT Combination Type
		H3	300:5 3CT Combination Type
		H4	400:5 3CT Combination Type
❷	Output Contact State	D	b(95-96)-a(97-98)
❸	Operating Power Supply/ Frequency	B	AC/DC24V Compatible
		F7	AC110V, 50/60Hz
		M7	AC220V, 50/60Hz
		Z7	AC/DC85~250V, 50/60Hz
❹	Converter	W	Window (Hole Type)
		T	Terminal (Terminal Type)

※ *For a CT combination type, please write an accessory code from the CT Order Codes separately.*

※ *For cables, please write an appropriate code for the required length when ordering a main body.*

To order a cable:

C A B L E – 1 5 – 0 0 H

❶ ❷

❶	Cable Connection Specification	15PIN	
❷	Cable Length	00H	0.5M
		1	1M
		01H	1.5M
		2	2M
		3	3M
		⋮	⋮
		10	10M

EOCR-3EZ/FEZ

Digital Over Current Relay

EOCR-3EZ Built-in Panel

■ Hole Type

EOCR-FEZ Embedded Panel

■ Terminal Type

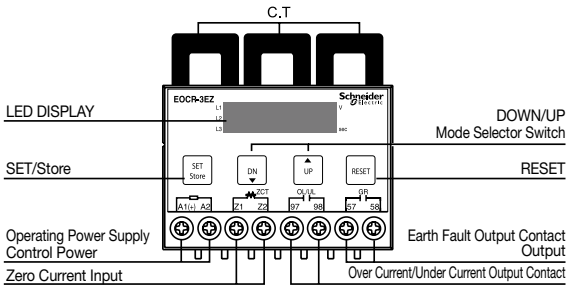

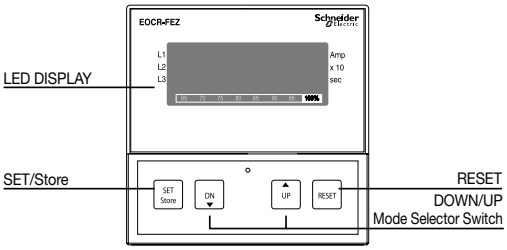

Main Features

- Built-in MCU (Micro Controller Unit)
- Real time processing/higher precision
- Over current protection range: 0.5~60A, wide range protection (1~960A with an external CT)
- Under current protection range : The set over current or less
- Earth fault current protection range: Earth fault protection via zero current detection / 0.02~3A (Definite operation)
- Over current protection operation time characteristic: Definite - 0.5~60A (external CT combination for over 60A)
  Inverse - 0.5~10A (external CT combination for over 10A)
- Earth fault protection operation time characteristics : Definite : 0.05~10 sec
- Digital Display
  - Auto circulation display on 3-phase current and earth fault current : Digital Ammeter (every 5 sec for each phase)
  - Allows fixed management on single-phase or earth fault current via manual circulation
  - Trip cause digital display : Easy Troubleshooting
- Last trip cause check function: Can check the last 3 trip causes and current at the occurrence of each trip. Available even during the recovery of electricity after a power outage.
- The actual current % on current change and current set value can be easily identified via a Bar Graph (FEZ type)
- Manual (instant)/electrical (remote) reset
- Also works well on frequency converter systems (e.g., inverter): Frequency response range 20~400Hz
- Fail Safe function (FS:ON): Self-diagnosis function - when power is supplied to the relay, the relay is normally energized
- Applicable in various installation environments, with both terminal and hole types

Protection Functions and Characteristics

Protection Function		Operation Time
Over Current		Operates based on the set ot
Under Current		Operates based on the set ut
Phase Loss		Within 3 sec
Reverse Phase		0.1~0.3 sec
Earth Fault Current		0.05~10 sec (Definite operation)
Unbalance		Within 8 sec
Locked Rotor	Lock	Operates within 0.5 sec after dt (Definite operation)
	Stall	0.5, 1~10 sec (Definite operation)

※ *Over Current Protection Activation Characteristics - 0.5A~10A : Definite / Inverse - 11A or higher: Definite (except when using an external CT)*

EOCR-3EZ/FEZ

Digital Over Current Relay

Specifications

Functions and Characteristics			Specifications
Current Setting	Over Current		Refer to current setting range table
	Under Current		0.5~59A / oFF (with an external CT : 800A or less)
	Earth Fault Current		0.02~3A (Definite)
	Unbalance		5%~50% / oFF
	Start Delay Time (dt)		1~200 sec (Definite)
	Over Current Operation Time (ot)		0.5~30 sec (Definite), 1~30 sec (Inverse)
	Under Current Operation Time (ut)		0.5~30 sec (Definite)
	Earth Fault Current Operation Time (Et)		0.05~10 sec (Definite)
	Earth Fault Operation Delay Time (ED) at Start-up		Off/1~10 sec (Definite)
Reset			Manual (Instant) Reset/Electrical Reset
Error Tolerance	Current		I<1A : ±0.05A, I≥1A : ±5%
	Time		t≤3s : ±0.2s, t〉3s : ±5%
Usage Environment	Temperature	Operation	-20℃~60℃
		Save	-30℃~80℃
	Humidity		30~85% RH (with no dew condensation)
Operating Power Supply	Terminal type		AC220/110V
			- DC/AC85~250V, 50/60Hz
	Hole type		- AC220V : ±15%, 50/60Hz
			- AC110V : ±15%, 50/60Hz
			- DC/AC24V
Output contact	OL/UL	1-SPST	AC250V/3A resistive load
	GR	1-SPST	AC250V/3A resistive load
Insulation Resistance	Between circuit and case		10㏁ or higher at DC500V
Insulation Withstanding Voltage	Between circuit and case		2.0KV 60Hz for 1 min
	Between contacts		1.0kV 60Hz for 1 min
	Between circuits		2.0KV 60Hz for 1 min
Installation Method			35mm DIN Rail or Panel

Over Current Operation Time Characteristic Curve

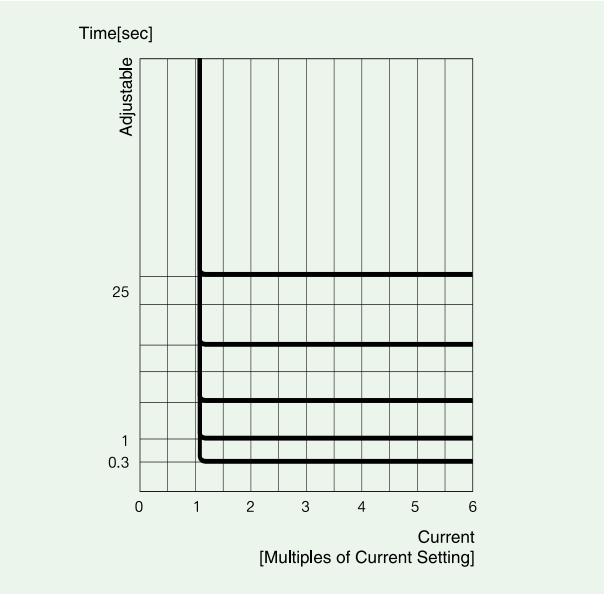

Table 1. Over Current Protection Definite Operation Characteristic Curve

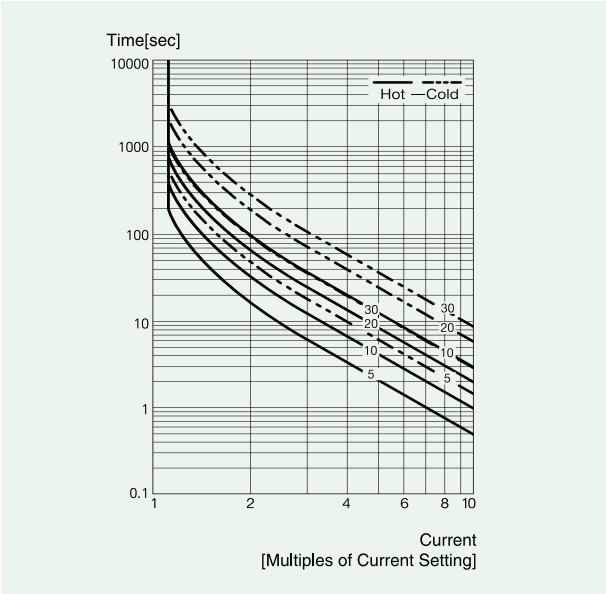

Table 2. Over Current Protection Inverse Operation Characteristic Curve (0.5~10A, external CT combination)

Current Setting Range Table

Setting Range	Number of CT Holes	External CT Current Transformer Ratio	CT Setting	Notes
0.5~60A	1	No CT combination	oFF	Wide Range
0.25~5.0A	2 Holes	No CT combination	2t	
0.1~2.0A	5 Holes	No CT combination	5t	
1~12A	1	10:05	10	
1.5~18A	1	15:05	15	
2.0~24A	1	20:05	20	
2.5~30A	1	25:05:00	25	
3.0~36A	1	30:05:00	30	
4.0~48A	1	40:05:00	40	
5~60A	1	50:05:00	50	
6~72A	1	60:05:00	60	
7.5~90A	1	75:05:00	75	
10~120A	1	100:05:00	100	
12~144A	1	120:05:00	120	
15~180A	1	150:05:00	150	
20~240A	1	200:05:00	200	
25~300A	1	250:05:00	250	
30~360A	1	300:05:00	300	
40~480A	1	400:05:00	400	
50~600A	1	500:05:00	500	
60~720A	1	600:05:00	600	
75~900A	1	750:05:00	750	
80~960A	1	800:05:00	800	

Display Front View

Automatically displays the operating current of 3 phases with the phase display every 5 sec in circulation, without additional button input.

• LED Display

EOCR-3EZ Type

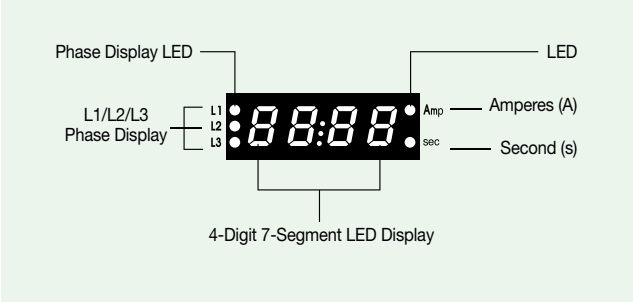

EOCR-FEZ Type

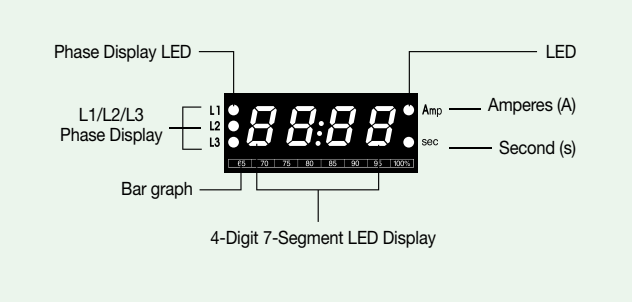

7-segment LED

• A large font and a comfortable background color are used to prevent visual interference caused by reflections from the control panel in any direction.

Bar graph (limited to FEZ)

• Allows you to view the load status of the motor by showing the ratio of the present operating current to the set OC (Over Current).

• If you set the OC set value to the rated current of the motor, the percentage (%) shown on the bar graph will indicate the load factor of the motor.

3-phase Digital Current System Function

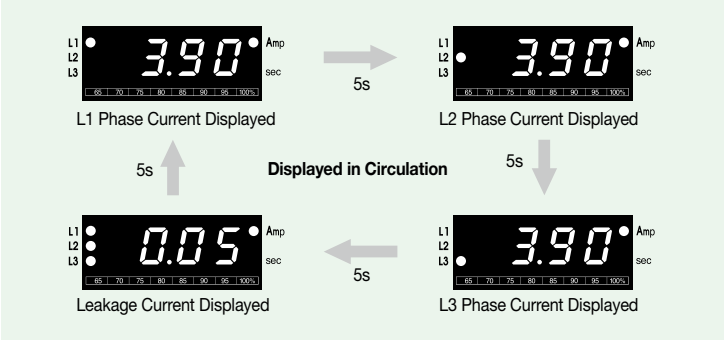

※ Press the SET (Store) button once during operation to view the manual circulation display instead of the auto circulation display. Every time you press the SET (Store) button while in manual circulation mode, the display changes in the order specified above, allowing you to lock on the current of a certain phase for focused management.

※Press the Reset button once to switch back to the auto circulation display.

Button Switch Functions and Setting Sequence

Mode	DN ▼ ▲ UP	Press the Up/Down buttons to find the function to set.
Set	SET Store	This mode indicates the start of the setting. When this button is pressed once, the corresponding value or characters flicker 5 times, during which you should continue the setting process. If it is left untouched for 30 seconds, it will be reset and you will have to press this button again to make the setting.
Adjust	DN ▼ ▲ UP	Press the Up/Down buttons to select the desired value or characters.
Store	SET Store	When the SET (store) button is pressed once, the selected value or characters will be stored and the flickering will stop at the same time.
Reset	RESET	Reset button is used to return to the initial state. Once the setting is made, press the Reset button or leave it for 30 seconds to complete the setting.

※ Manual Circulation Display

- *If you press the Set (Store) button during operation, the display of 3-phase current is switched from auto circulation display to manual circulation display.*
- *Once the original L1 phase is displayed, every time you press it, the phase display will change in the order of L2→L3→L1 phase. Press Reset to return to the auto circulation display state.*

※ Trip Cause Check

- *After pressing the Up/Down buttons to enter "Trip" Mode, press the Set/Store button once to display the last trip cause. Every time the Up button is pressed, the current at each phas (L1, L2, L3) at the time of the trip will be displayed. Press it once more to check the second-last trip cause. The method for checking subsequent fault causes and current during operation is the same as the one used for checking the last trip cause.*

• Setting sequence

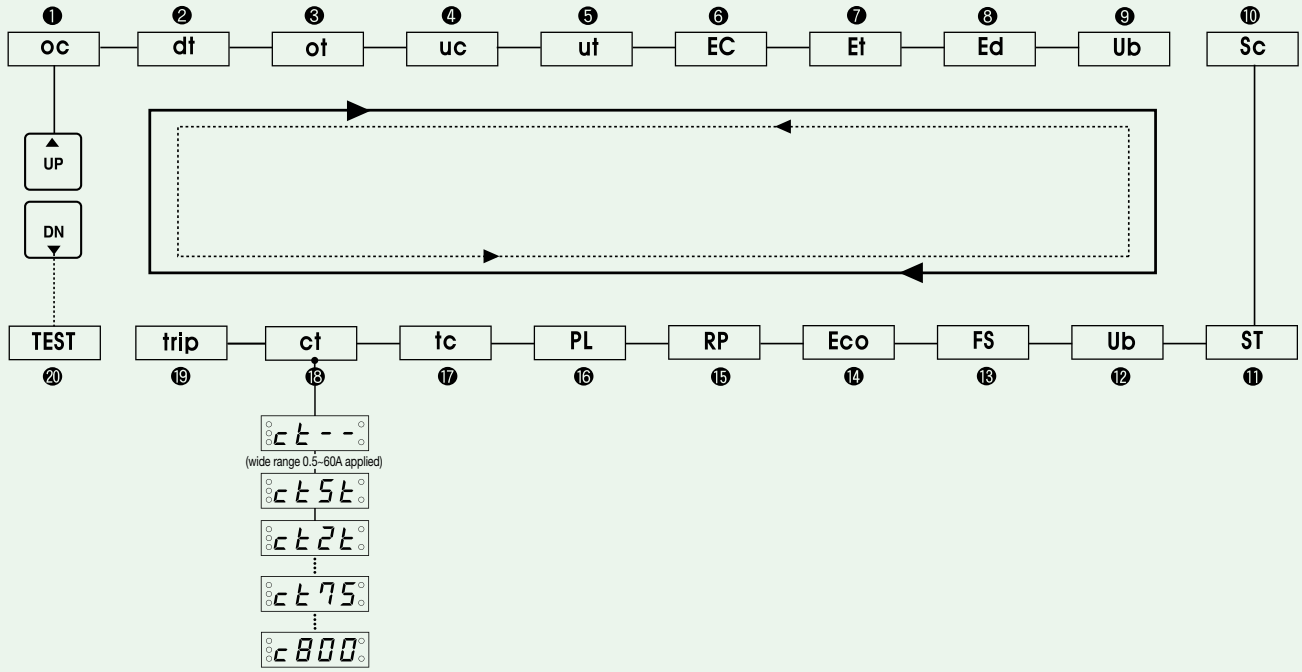

- Press the UP/Down buttons to find the Mode to set.
- To find ot in this figure, press the UP SW button 3 times if you are rotating the sequence of modes in a clock-wise direction, then ot will appear in the display window.

Function Setting Sequence and Setting Menu

Sequence	Setting	Display	Description	Setting Range	Default
1	Over Current Setting	oc 0.5	• Set the desired over current value. • Set it higher (100%~125%) than the active load current (operating current). • Current of 0.4A or higher can be displayed, but setting and operation are only available at the current of 0.5A or higher. • 0.5 ~ 10A : Changes in increments of 0.1A • 10 ~ 60A : Changes in increments of 1A • For Inverse, the setting cannot exceed 10A. • When setting the CT Ratio, the protection set value converted from the secondary CT (=primary active current/CT Ratio) must be set in "OC" Mode before setting the Ratio in "CT" Mode. • Check the current value in "OC" Mode after setting the CT Ratio, and you will recognize that it is automatically converted to the active current value based on the primary CT. • Afterwards, the active current value can be changed to any value in the "OC" Mode for the identical CT ratio.	Current Setting Range Table (see p.165)	10
2	Start Delay Time Setting	dt 1.0.	• Function to stop the operation of start-up over current, under current, lock, and stall functions. Must be set accurately. Phase loss and reverse phase function normally during the set time period. • 1~100 sec: Changes in increments of 1 sec. • 100~200 sec: Changes in increments of 10 sec.	• Can be set from oFF(--) 1~200 sec	10
3	Over Current Operation Time Setting	ot 1.0.	• Definite/Inverse can be selected and set in the tc mode. • 0.2~1 sec: Changes in increments of 0.1 sec. • 1~30 sec: Changes in increments of 1 sec.	• Can be set from 0.5~0.9-1…sec (definite time) • Can be set from 1~30 (Inverse)	5
4	Under Current Setting	uc 0.5	• Sets the under current (light load) value you want. • Cannot be the same as OC set value or higher. • 0.5~10A: Changes in increments of 0.1A. • 10~59A: Changes in increments of 1A.	• Can be set from 0.5~59A oFF (Mode display: - -)	--
5	Under Current Operation Time Setting	ut 1.0.	• Sets the operation time of the relay for the set under current (light load). • Definite Operation • 0.5~1 sec: Changes in increments of 0.1 sec. • 1~30 sec: Changes in increments of 1 sec.	Can be set from 0.5~30 sec	--
6	Earth Fault Over Current Setting	Ec.03	• Earth Fault Protection via Zero Phase Current Detection • Displayed as Ec.02 if set to 0.02A.	• 0.02~3A • 0.02~0.1: Increases in increments of 0.01A • 0.1~3: Increases in increments of 0.1A	3
7	Earth Fault Protection Operation Time Setting	Et 0.1.	• 0.05, 0.1~1~10 sec / Displayed as Et.02 if set to 0.02 sec. (0.1~1 sec: Changes in increments of 0.1 sec, 1~10 sec: Changes in increments of 1 sec)	• 0.05~10 sec (Definite operation)	1
8	Earth Fault Delay Time Setting	Ed--	• -- : Ignores earth fault operation delay during startup. Operates at the set current or higher during startup • Operation stops for the specified duration of time (at startup)	• oFF/1~10 sec	1
9	Lock (Stall) Current Setting: A multiple of OC set value.	Lc 7	• Definite Operation • Operates within 0.5 sec after dt • Does not operate during operation.	• 0.5~10A: 2~10 times the over current setting • 11A or higher: Automatically reduced to an appropriate multiple value. The upper value set for "Lc" is "[Lc" upper value=100÷ "OC" set value], during which "Lc" can be changed to the range of upper value or below. • oFF (Mode display: - -)	10
10	Stall (heavy load during operation) or Shock (mechanical shock) Setting: A multiple of the over current set Value	Sc 2.0	• Set to 1.5 times the over current set value. • Definite Operation • If the current flow exceeds the multiple of the OC set value due to heavy load during normal operation after startup, it will trip after the set St time.	• 5~50% oFF (Mode display: - -)	5
11	Stall Operation Time Setting	St 5.0.	• When Sc is set to oFF(--), St is also automatically displayed as oFF(--). • Operates with the setting of 0.5 sec for shock protection	• 0.5, 1~10 sec oFF (Mode display: - -)	5

Sequence	Setting	Display	Description	Setting Range	Default
12	Current Unbalance Setting	Ub 10	• Indicates that it is set to detect 10% of the imbalance current against the max. phase current. • [(max. phase current-min. phase current)/max. phase current] ×100>set %	• 5~50% oFF (Mode display: - -)	50
13	Fail Safe (NVR) Function	FSon	• Cannot be set while operating. (over current output contact)	ON, oFF (- -)	ON
14	Eco (select earth fault output contact)	Eco.d	57 ┤├58 GR •정상시 소자상태로 open접점을 표시합니다.	• Can select contact a or b • Cannot be set while operating. • Eco.b setting: Becomes 57 ┤├58 closed contact after the operating power is supplied.	a
15	RPR (Reverse Phase Relay) Function	RPon	• Off(--) ignores reverse phase function.	ON, oFF (Mode display: - -)	ON
16	Phase Loss Function Select	PLon	• Can be set to oFF(--). (Set to OFF for single-phase)	ON, oFF (Mode display: - -)	ON
17	Over Current Protection Operation Time Characteristics (Select Definite/ Inverse)	tcdE	• tc (Time-Current Characteristic) : dE, In - Definite (dE): Operates based on operation characteristics in Table 1. - Inverse (In): Operates based on characteristics curve in Table 2. - When set to 11A or higher, dE is automatically applied. ※ Once Inverse (tdIn) is selected and operation delay time (dt) is set, a hot curve will be applied after dt. When using inverse time for a longer startup time, it is possible to set a faster operation time on overload during operation.	• dE(definite), In(Inverse) • 0.5~10A: Can select dE/In • 11A or higher: dE	dE
18	CT Current Transformer Ratio Setting	ct75	• Automatically set to wide range (0.5~60A) mode if set to oFF (--). • Cannot set the CT scale while operating. • 5t: Protectable at 0.12A or higher • 2t: Protectable at 0.3A or higher • To set the CT Ratio, the target active current value for protection should be converted to the secondary value (=active current value/CT ratio), and the resulting value must be set first in the "OC" Mode. (see the "OC" Mode setting guide for details)	OFF-5t, 2t, 10-15-25-30-40-50-60-75-100-120-150-200-250-300-400-500-600-750-800	--
19	Trip Cause Check	tr 1P	• Displayed in the order of Last-2nd Last. Trip causes and the current at each phase can be checked.	Can check from the 1st to the 3rd	--
20	TEST Function	TEST	TEST. ⬇ 3 sec ot 10. ⬇ 10 sec End	Does not convert to Test while operating.	

Inspection after installing EOCR should be performed as follows:
- Ensure that the wiring has been performed properly.
- Press the Down button once before starting the motor to show the Test display. 3 seconds after its display, a countdown of the set Ot value will start. If End is displayed after the countdown, it is normal.
- EOCR is designed to block the test function while operating in order to prevent unnecessary trip accidents.

How to Set Current/Time

Protects the motor by setting the current and time appropriately, as follows:

- **Notes on Current Setting**

1. Wide Range: If CT is set to --(oFF), it turns to the wide range. The range of working current can go up to 0.5A~60A for Definite (set to tcdE), and up to 0.5A~10A for Inverse (set to tcln). (not including the case of using an external CT)

   ※ You can select either Definite or Inverse if the OC set value is 10A or lower. However, if the OC set value is 10A or higher, Inverse setting is not allowed. Similarly, OC set value cannot be 10A or higher when it is set to Inverse (tcln).

2. External CT Combination
   - CT ratio cannot be adjusted if OC (Over Current) set value is 6A or higher.
   - CT setting sets the primary current value of an external CT. Once set, it is displayed as CT75 if the CT primary current is 75:5 or lower during the setting, and displayed as c100 if it is 100:5 or higher.
   - The current range available when using an external CT is calculated as follows: CT ratio (i.e., 100:5=100/5=20)×0.5-6A=10-120A

   ※•Once the current transformer ratio of CT is set, OC setting will not display the letter "c" in "OC"; instead, it will be displayed as o10.8 without "c".

   •Similarly, the under current setting will not display the "c" in "UC" and will be displayed as u9.80, for example.

   - Over Current Setting Sequence
   - Set the OC (Over Current) value to 6A or lower.
   - Set the CT ratio. The OC (Over Current) that is already set will be automatically converted to a value multiplied by the current transformer ratio of the CT (20 times if 100:5). For example, if OC is set at 4A and CT at 200, the over current setting is automatically set to 4×40=160A and saved.
   - Simply check the over current setting and set it appropriately for the load.

3. Operation Time
   - Definite: Set the time it takes for the current exceeding the set point to start to flow and trip the relay to ot.
   - Inverse: Decide when the relay will be tripped in terms of after how much time has elapsed and after what multiple value of the set current begins to flow by referring to the current-time characteristic curve, and complete the setting. Consider the figure below as an example. If ot is set to 5 and the current flow is 5 times the regular current, the relay will be tripped at 2 sec; if set to 10, at 4 sec.

- **Under Current Protection**

1. It is more convenient to set UC--(oFF) to prevent malfunction during startup for a test operation. Even during the test operation, it operates with no-load because the current flow is only one-third the rated current during no-load.
2. During normal operation, check the current in no-load state, and set the current to be slightly higher than the current in no-load state (to prevent no-load operation).
3. If under current function is unnecessary, the function is removed if set to UC--(oFF), and the over current operation time ut is removed as well.

Trip Cause Display and Check Method

Displays all kinds of trip causes and fault current values on the digital display window, allowing for easy maintenance and a faster response to accidents

Trip Cause	Trip Cause Display	Description	Notes
Over Current	L1 L2 L3 -oc- Amp sec	Detects over current at L1 (R) phase during operation and indicates operation.	Capable of checking the current for each phase by pressing the switch after trip
Under Current	L1 L2 L3 -uc- Amp sec	Detects under current at L2 (S) phase during operation and indicates operation.	
Phase Loss	L1 L2 L3 -PL- Amp sec	Indicates operation due to a phase loss at L2 (S) phase.	
Reverse Phase	L1 L2 L3 -AP- Amp sec	Displays reverse phase trip.	
Earth Fault	L1 L2 L3 -Ec- Amp sec	Detects earth fault current and operates.	
Unbalance	L1 L2 L3 -Ub- Amp sec	Indicates that it operates due to a phase unbalance calculated by [(max. phase current-min. phase current) / max. phase current]×100>set %, and that min. current at the time is at L1 (R) phase.	
Locked Rotor	L1 L2 L3 -Lc- Amp sec	Detects stall and indicates operation.	
Jam Trip During Operation	L1 L2 L3 -Sc- Amp sec	Displays trip due to a stall or mechanical shock caused by heavy load at L3 (T) phase during operation.	

Example Wiring Diagram

EOCR installation must be wired as shown below.

-Installation on either the frontal or the rear part of the MC is allowed.

EOCR-3EZ for Motor Protection (FS : oFF setting) hole type

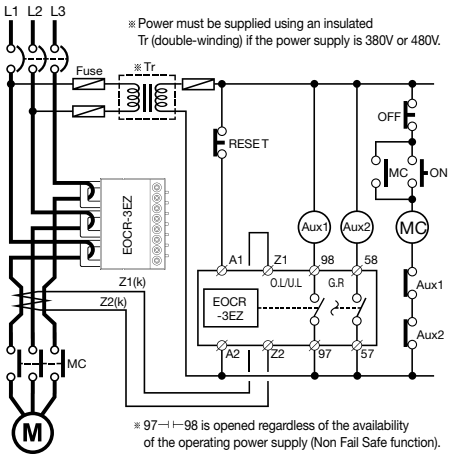

※ The OL output 97⊣⊢98 is converted to close if FS is set to ON and operating power is supplied to A1 and A2.

※ ZCT terminal should be used without a ground connection.

EOCR-FEZ for Motor Protection (FS : oFF setting) terminal type

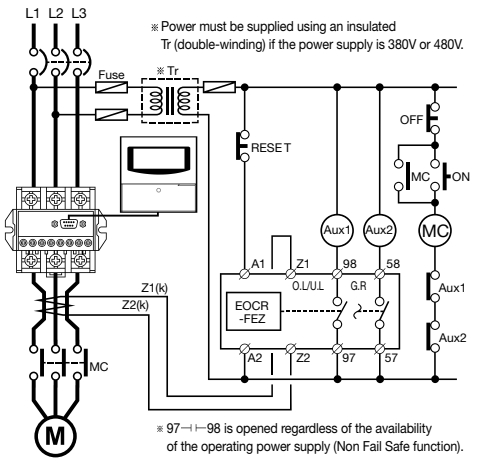

※ The OL output 97⊣⊢98 is converted to close if FS is set to ON and operating power is supplied to A1 and A2.

※ ZCT terminal should be used without a ground connection.

I/O Terminal Configuration

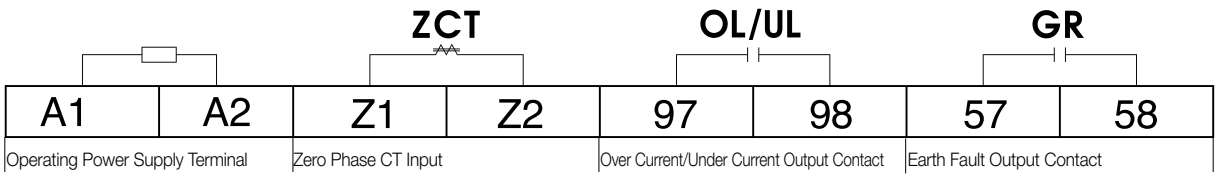

※ The operating power supply must be connected to operating power supply terminals (A1, A2) and the specified operational voltage should be applied.

※ When using Star-Delta Starter (Y-△starter), ZCT must be installed on the upper part of the main MC upper body, below the Main CB.

EOCR-3EZ/FEZ

Digital Over Current Relay

Dimensions Diagram

EOCR-3EZ

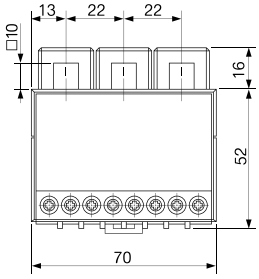

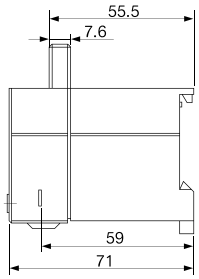

DIN RAIL TYPE

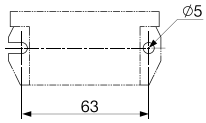

BRACKET HOLE SIZE

EOCR-FEZ

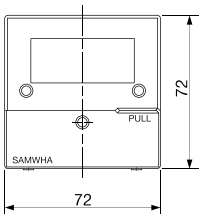

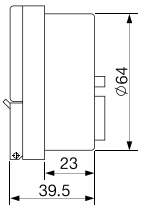

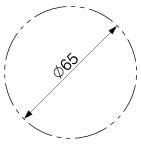

MOUNTING HOLE SIZE

EOCR-FEZ (Terminal Type)

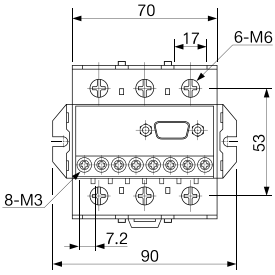

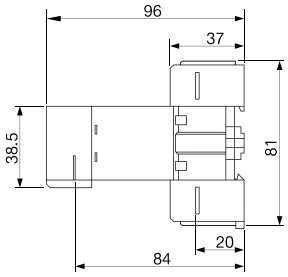

PANEL & DIN RAIL TYPE

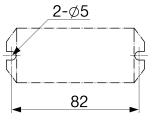

MOUNTING HOLE SIZE

EOCR-FEZ (Hole Type)

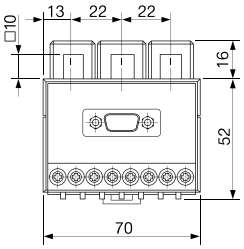

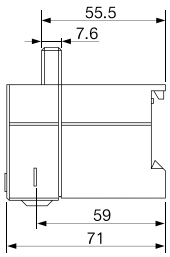

DIN RAIL TYPE

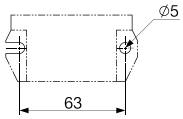

BRACKET HOLE SIZE

EOCR-3EZ/FEZ

Digital Over Current Relay

Ordering Specifications

Reference			Current Range [A]	Operating Power Supply			Notes
				Voltage [V]	Frequency [Hz]		
 EOCR-3EZ	EOCR3EZ	-WRABA	Wide Range	DC/AC 24V	-	-	-
		-H1ABA	100:5	DC/AC 24V	-	-	CT Combination
		-HHABA	150:5	DC/AC 24V	-	-	CT Combination
		-H2ABA	200:5	DC/AC 24V	-	-	CT Combination
		-H3ABA	300:5	DC/AC 24V	-	-	CT Combination
		-H4ABA	400:5	DC/AC 24V	-	-	CT Combination
		-WRAF7A	Wide Range	AC 110V	50/60	-	-
		-H1AF7A	100:5	AC 110V	50/60	-	CT Combination
		-HHAF7A	150:5	AC 110V	50/60	-	CT Combination
		-H2AF7A	200:5	AC 110V	50/60	-	CT Combination
		-H3AF7A	300:5	AC 110V	50/60	-	CT Combination
		-H4AF7A	400:5	AC 110V	50/60	-	CT Combination
		-WRAM7A	Wide Range	AC 220V	50/60	-	-
		-H1AM7A	100:5	AC 220V	50/60	-	CT Combination
		-HHAM7A	150:5	AC 220V	50/60	-	CT Combination
		-H2AM7A	200:5	AC 220V	50/60	-	CT Combination
		-H3AM7A	300:5	AC 220V	50/60	-	CT Combination
		-H4AM7A	400:5	AC 220V	50/60	-	CT Combination
 EOCR-FEZ (Hole Type)  EOCR-FEZ (Terminal Type)	EOCRFEZ	-WRABWA	Wide Range	DC/AC 24V	-	Window	-
		-H1ABWA	100:5	DC/AC 24V	-	Window	CT Combination
		-HHABWA	150:5	DC/AC 24V	-	Window	CT Combination
		-H2ABWA	200:5	DC/AC 24V	-	Window	CT Combination
		-H3ABWA	300:5	DC/AC 24V	-	Window	CT Combination
		-H4ABWA	400:5	DC/AC 24V	-	Window	CT Combination
		-WRAF7WA	Wide Range	AC 110V	50/60	Window	-
		-H1AF7WA	100:5	AC 110V	50/60	Window	CT Combination
		-HHAF7WA	150:5	AC 110V	50/60	Window	CT Combination
		-H2AF7WA	200:5	AC 110V	50/60	Window	CT Combination
		-H3AF7WA	300:5	AC 110V	50/60	Window	CT Combination
		-H4AF7WA	400:5	AC 110V	50/60	Window	CT Combination
		-WRAM7WA	Wide Range	AC 220V	50/60	Window	
		-H1AM7WA	100:5	AC 220V	50/60	Window	CT Combination
		-HHAM7WA	150:5	AC 220V	50/60	Window	CT Combination
		-H2AM7WA	200:5	AC 220V	50/60	Window	CT Combination
		-H3AM7WA	300:5	AC 220V	50/60	Window	CT Combination
		-H4AM7WA	400:5	AC 220V	50/60	Window	CT Combination
		-WRABTA	Wide Range	DC/AC 24V	-	Terminal	-
		-WRAZ7TA	Wide Range	DC/AC 85~250V	50/60	Terminal	-

Accessory 1			
	Reference	PIN Type	Length (M)
Cable	CABLE-15-00H	15PIN	0.5
	CABLE-15-001	15PIN	1
	CABLE-15-01H	15PIN	1.5
	CABLE-15-002	15PIN	2
	CABLE-15-003	15PIN	3
	⋮	⋮	⋮
	CABLE-15-010	15PIN	10

Accessory 2		
	Reference	Hole Diameter (㎜)
ZCT	ZCT-035	35
	ZCT-080	80
	ZCT-120	120

EOCR-3EZ/FEZ

Digital Over Current Relay

How to Order

To order an EOCR-3EZ:

E O C R 3 E Z – W R A Z 7 A

❶ ❷ ❸ ❹

❶	Current Range	WR	0.5~60A
		H1	100:5 3CT Combination Type
		HH	150:5 3CT Combination Type
		H2	200:5 3CT Combination Type
		H3	300:5 3CT Combination Type
		H4	400:5 3CT Combination Type
❷	Output Contact State	A	a(97-98): OC, a(57-58): GR
		C	b(95-96), a(97-98) OL, GR Shared Contact
❸	Operating Power Supply/ Frequency	B	AC/DC24V Compatible
		F7	AC110V, 50/60Hz
		M7	AC220V, 50/60Hz
❹	Earth Fault Current Setting Range	A	0.02~3A

※For a CT combination type, please write an accessory code from the CT Order Codes separately.

To order an EOCR-FEZ:

E O C R F E Z – W R A Z 7 W A

❶ ❷ ❸ ❹ ❺

❶	Current Range	WR	0.5~60A
		H1	100:5 3CT Combination Type
		HH	150:5 3CT Combination Type
		H2	200:5 3CT Combination Type
		H3	300:5 3CT Combination Type
		H4	400:5 3CT Combination Type
❷	Output Contact State	A	a(97-98): OC, a(57-58): GR
		C	b(95-96), a(97-98) OL, GR Shared Contact
❸	Operating Power Supply/ Frequency	B	AC/DC24V Compatible
		F7	AC110V, 50/60Hz
		M7	AC220V, 50/60Hz
❹	Converter	Z7	AC/DC85~250V, 50/60Hz
		W	Window (Hole Type)
		T	Terminal (Terminal Type)
❺	Earth Fault Current Setting Range	A	0.02~3A

※For a CT combination type, please write an accessory code from the CT Order Codes separately.
※For cables, please write an appropriate code for the required length when ordering a main body.

To order a ZCT:

Z C T – 0 3 5

❶

❶	Hole Diameter	035	35mm
		080	80mm
		120	120mm

To order a cable:

C A B L E – 1 5 – 0 0 H

❶ ❷

❶	Cable Connection	15PIN	
❷	Cable Length	00H	0.5M
		001	1M
		01H	1.5M
		002	2M
		⋮	⋮
		010	10M

CT (new model)

Current Transformer for EOCR Combination

EOCR-2CT

EOCR-3CT

• **Combined Use for Bulk Load Protection of EOCR (Definite)**

Specifications

Model Name		2CT	3CT
Current Transformer Ratio	100	100 : 5A	100 : 5A
	150	150 : 5A	150 : 5A
	200	200 : 5A	200 : 5A
	300	300 : 5A	300 : 5A
	400	400 : 5A	400 : 5A
Rating		3.0	3.0
Burden		1.25 VA	1.25 VA
Insulation Voltage		AC600V	AC600V
Insulation Withstanding Voltage		2kV	2kV
Insulation Resistance		10MΩ (DC500V Megger)	10MΩ (DC500V Megger)
Attachment		Panel	Panel

※Burden is based on the Metering Class.
※Do not use these CTs for non-EOCR-related purposes.

Dimensions Diagram

■ **2CT**

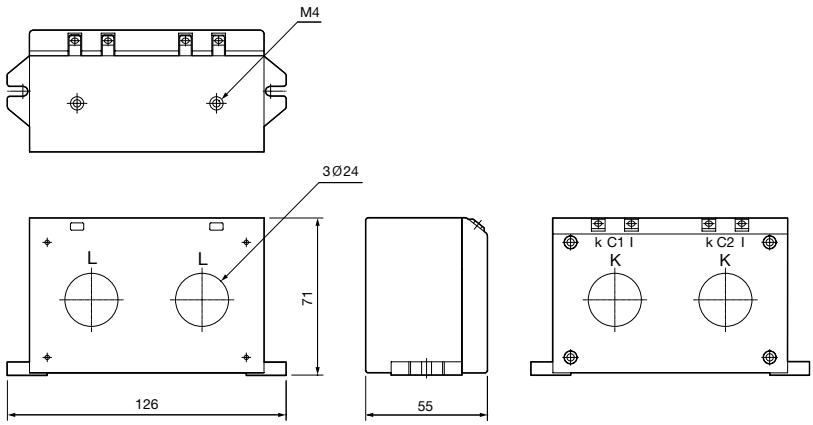

■ **3CT**

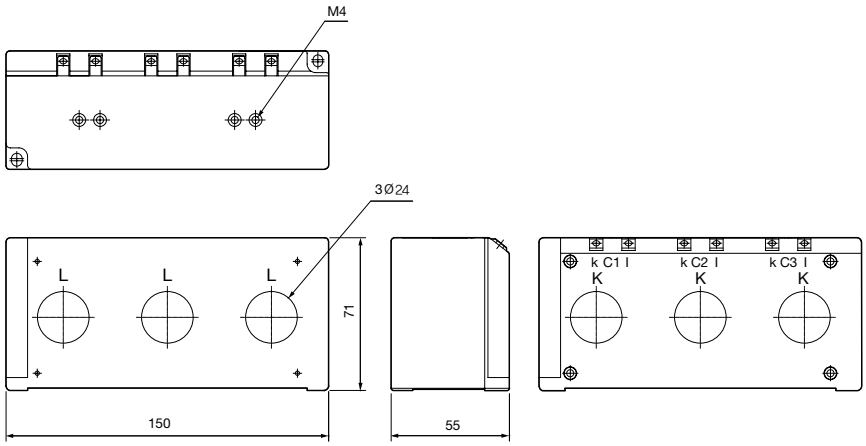

CT (new model)

Current Transformer for EOCR Combination

Ordering Specifications

Reference		CT Current Transformer Ratio	Notes
2CT-	D1-100-C	100:5	Rectangular CT
	DH-150-C	150:5	Rectangular CT
	D2-200-C	200:5	Rectangular CT
	D3-300-C	300:5	Rectangular CT
	D4-400-C	400:5	Rectangular CT
3CT-	H1-100-C	100:5	Rectangular CT
	HH-150-C	150:5	Rectangular CT
	H2-200-C	200:5	Rectangular CT
	H3-300-C	300:5	Rectangular CT
	H4-400-C	400:5	Rectangular CT

How to Order

To order a 2CT:

2 C T – D 1 – 1 0 0 – C

❶

❶	**CT Current Transformer Ratio**	D1	100-C	Rectangular 2CT 100:5
		DH	150-C	Rectangular 2CT 150:5
		D2	200-C	Rectangular 2CT 200:5
		D3	300-C	Rectangular 2CT 300:5
		D4	400-C	Rectangular 2CT 400:5

To order a 3CT:

3 C T – H 1 – 1 0 0 – C

❶

❶	**CT Current Transformer Ratio**	H1	100-C	Rectangular 3CT 100:5
		HH	150-C	Rectangular 3CT 150:5
		H2	200-C	Rectangular 3CT 200:5
		H3	300-C	Rectangular 3CT 300:5
		H4	400-C	Rectangular 3CT 400:5

ZCT

For Zero Phase Current Detection

ZCT-35Ø

ZCT-80Ø

ZCT-120Ø

• **Applies to Earth Fault Protection Relay with Zero Phase Current Detection Method**

Specifications

Model Name		Hole Diameter
ZCT	35	35mm
	80	80mm
	120	120mm
Zero Phase Primary Current		200mA
Zero Phase Secondary Current		1.5mA
Error Tolerance		±5%
Burden		10VA
Rated Voltage		AC600V
Insulation Withstanding Voltage		2kV
Insulation Resistance		10MΩ (DC500V Megger)
Attachment		Panel

Dimensions Diagram

ZCT-∅35

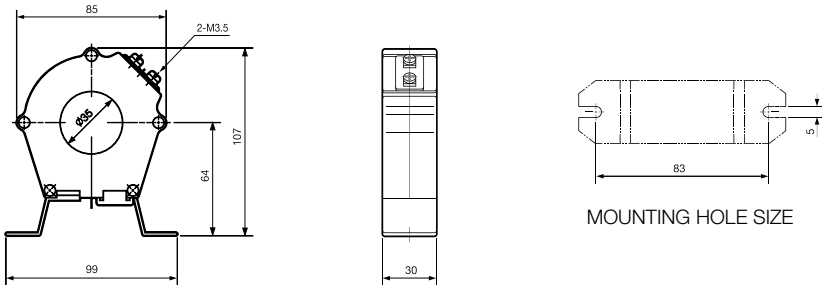

ZCT-∅80

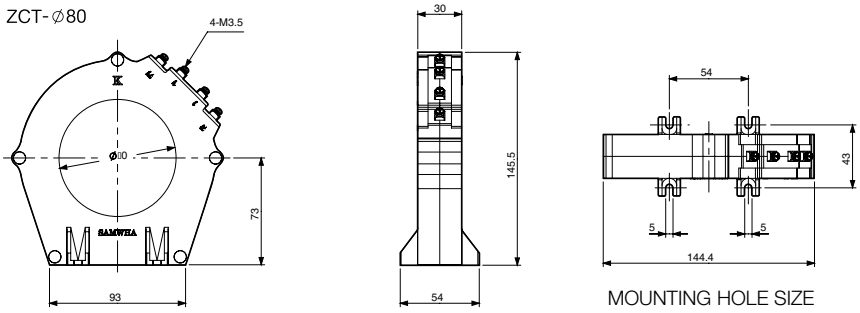

ZCT-∅120

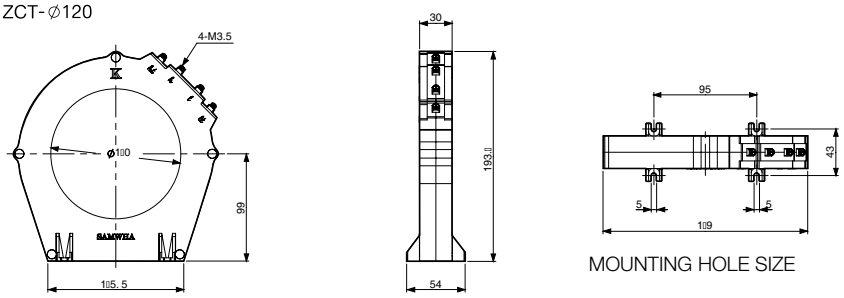

ZCT

For Zero Phase Current Detection

Ordering Specifications

	Reference	Hole Diameter (mm)	Notes
ZCT-	035	35	
	080	80	
	120	120	

How to Order

To order a ZCT:

Z C T – 0 3 5

❶

❶	**Hole Specifications**	035	35m/m
		080	80m/m
		120	120m/m

SR-CT

SR-CT

- Inverse Characteristic Applicable for EOCR Bulk Load Protection
- Over Current Integer: 10
- Specific to Electrical Over Current Relay

Specifications

Current Transformer Ratio	Type	Current Transformer Ratio
	SR-CT-100	100 : 5A
	SR-CT-150	150 : 5A
	SR-CT-200	200 : 5A
	SR-CT-300	300 : 5A
	SR-CT-400	400 : 5A
Error Tolerance (Rating)		±3% (10P 10)
Burden		1.25VA (5VA : Based on Metering Class)
Secondary Current		5A
Insulation Voltage		AC600V
Insulation Withstanding Voltage		3kV
Insulation Resistance		10MΩ (DC500V Megger)
Attachment		35mm DIN Rail / Panel

※ Error Tolerance (rating) IEC44-6 •10P - for protective relay, error factor ±3% •10 - over current integer

Dimensions Diagram

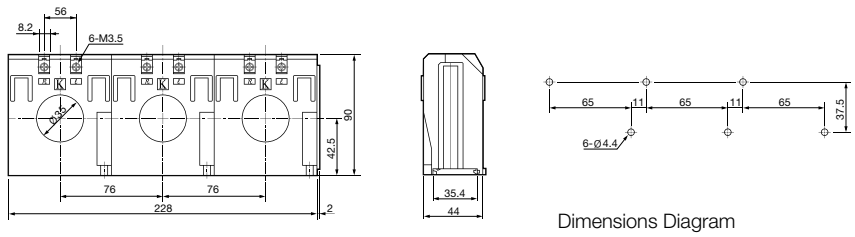

Dimensions Diagram

Ordering Specifications

CT			
Model	**Reference**	**Ratio**	**Notes**
SR-1CT-	100	100:05:00	
	150	150:05:00	
	200	200:05:00	
	300	300:05:00	
	400	400:05:00	
SR-2CT-	100	100:05:00	
	150	150:05:00	
	200	200:05:00	
	300	300:05:00	
	400	400:05:00	
SR-3CT-	100	100:05:00	
	150	150:05:00	
	200	200:05:00	
	300	300:05:00	
	400	400:05:00	

How to Order

To order an SR-CT:

S R – 3 C T – 1 0 0

❶

❶	**CT Current Transformer Ratio**	S1	100	100:05:00
		SH	150	150:05:00
		S2	200	200:05:00
		S3	300	300:05:00
		S4	400	400:05:00

Analog Relay for Motor Protection

Schneider Electric

TQCS Quality System

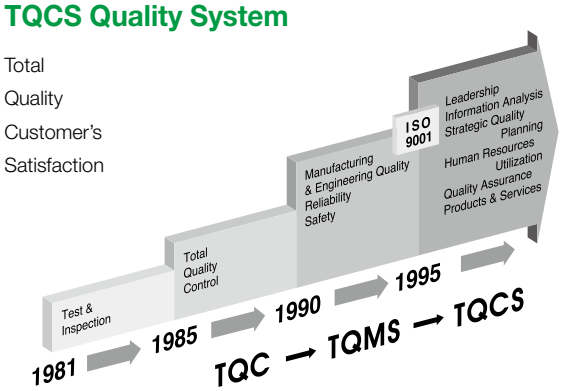

ISO 9001인증서

ISO 14001인증서

ISO 9001/ISO 14001인증

Intellectual Property

EOCR(전자식 과전류계전기)관련 지적재산권 보유 현황

구 분	국 내			해 외			총 계
	등 록	출 원	계	등 록	출 원	계	
특 허	5	0	5	0	0	0	5
실용신안	1	0	1	0	0	0	1
의 장	13	0	13	0	0	0	13
상 표	51	0	51	13	0	13	64
계	70	0	70	13	0	13	83

Schneider Electric Product Index

1.Current Protection Relay for Alternating Current (AC)

Model Name	Protection Function	Current Detection	Time Characteristic	Reset	Operation Display	Attachment	Other	Page
EOCR-SS	Over Current (Phase Loss/Locked Rotor)	2CT	Definite	Manual	LED	P/R		225
EOCR-AR	Over Current (Phase Loss/Locked Rotor)	2CT	Definite	Auto	LED	P/R		229
EOCR-SP (01.10,20)	Over Current (Phase Loss/Locked Rotor)	2CT	Definite	Manual	LED	MC		231
EOCR-SP (40)	Over Current/Phase Loss (Locked Rotor)	2CT	Definite	Manual	LED	MC		231
EOCR-SE2	Over Current (Phase Loss/Locked Rotor)	2CT	Definite	Manual	LED	P/R		233
EOCR-DS1 (T)	Over Current/Phase Loss (Locked Rotor)	3CT	Inverse	Manual	LED ⓒ	P/R (MC)	For 3 phases	236
EOCR-DS3 (T)	Over Current/Phase Loss/Reverse Phase/ Locked Rotor	3CT	Definite	Manual	LED ⓒ	P/R (MC)	For 3 phases	236
EUCR	Under Current (light-load)	2CT	Definite	Manual	LED	P/R		240
EOCR-DG (T)	Over Current/Phase Loss/Reverse Phase/ Earth Fault/Locked Rotor/Unbalance	3CT	Definite	Manual	LED ⓒ	P/R	Residual Current Detection	241
EOCR-DZ (T)	Over Current/Phase Loss/Reverse Phase/ Earth Fault/Locked Rotor/Unbalance	3CT	Definite	Manual	LED ⓒ	P/R	Zero Phase Current Detection	245
EOCR-4E	Over Current/Phase Loss/Earth Fault/Short-circuit	3CT	Inverse	Manual	LED ⓒ	P/R		249

2.Current Protection Relay for Direct Current (DC)

DCL	Over Current	Shunt	Definite	Manual/ Auto	LED	P/R		252
DUCR	Under Current (light-load)	Shunt	Definite	Manual/ Auto	LED	P/R		252
DOCR-S/H	Over Current (S: Shunt / H: Hall Element)	Shunt/Hall Sensor	Definite	Manual/ Auto	FND ⓒ	P/R		254
DUCR-S/H	Over Current (S: Shunt / H: Hall Element)	Shunt/Hall Sensor	Definite	Manual/ Auto	FND ⓒ	P/R		254

3.Voltage Protection Relay for Alternating Current (AC)

EOVR	Over Voltage	-	Definite	Manual/ Auto	LED	P/R	For a single phase	258
EUVR	Under Voltage	-	Definite	Manual/ Auto	LED	P/R	For a single phase	260
EVR-PD	Over Voltage/Under Voltage/Phase Loss/ Reverse Phase/Voltage Unbalance	-	Definite	Manual/ Auto	FND ⓒ	P/R	For 3-phase	262
EVR-FD	Over Voltage/Under Voltage/Phase Loss/ Reverse Phase/Voltage Unbalance	-	Definite	Manual/ Auto	FND ⓒ	P/R/F	For 3-phase	262

4. Voltage Relay for Direct Current (DC)

DOVR	Over Voltage		Definite	Manual/ Auto	LED	P		266
DUVR	Under Voltage	-	Definite	Manual/ Auto	LED	P		266
DVR	Over Voltage/Under Voltage	-	Definite	Manual/ Auto	FND ⓒ	P/R		269

5. Other Application Relays

ELR	Earth Fault Protection Relay	ZCT (CBCT)	Definite	Manual	LED	F	Zero Phase Current Detection	273
EFR	Earth Fault Protection Relay	Residual Current	Definite	Manual	LED	F	Residual Current Detection	275
EGR	Earth Fault Protection Relay	ZCT (CBCT)	Definite	Manual	LED	P/R	Zero Phase Current Detection	277
SDDR-C	Momentary Power Failure Restart Relay		Definite	Manual	LED	Socket	Delay-on Make Timer	279
PMR	Reverse Phase/Phase Loss/Voltage Unbalance (variable settings available)		Definite	Manual/ Auto	LED ⓒ	P/R		282
CT	Current Transformer for EOCR Combination							284
ZCT	Zero Phase Current Transformer							286
SR-CT	Current Transformer for EOCR Combination							288

(Phase Loss/Locked Rotor): Operates upon detection of over current /Locked Rotor: Stall and Jam functions / (T): Terminal type / FND: Digital Display Window / ⓒ: Trip Cause Check / Alert: Alert Setting and Alert Signal Output P: Panel Attachment / R: Rail (35mm DIN Rail) Attachment / MC: Electrical Contactor Direct Attachment / F: Display / Control Section Embedded Panel Attachment (Flush Mount)

Technical Information

EOCR-M Series/D Series/3E/4E/4F/SS Series/SP Series/DS Series

Option-1. Looping

(protects small loads below the setting range by increasing the number of holes)

Load (motors) with operating current below the current setting range of EOCR (05Type: below 0.5A) increases the number of penetrating holes for electric cables that go through EOCR's CT hole (Hole/Windows) for current detection in order to protect the motor with the amplified detection current.

	Current Setting Range (A)	CT Hole for Lead Wire Number of Holes (#)	Number of Loops (#)
05 Type	0.5~6	1	0…Fig 1
Current Setting Range after Adjusting the Number of Holes	0.25~3	2	1…Fig. 2
	0.17~2	3	2
	0.12~1.5	4	3
	0.10~1.2	5	4
	▼	▼	▼

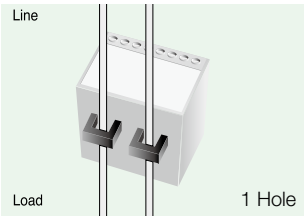

Fig 1

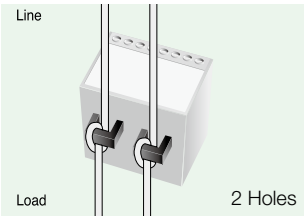

Fig 2

Option-2. External CT

(protects heavy load by combining an external CT)

For heavy loads (motor) exceeding the current setting range of 60 Type, use a model that can be combined with an external CT with a secondary current of 5A for protection.

	Type	Current Setting Range (A)	Combined CT Current Transformer Ratio
05 Type	05	0.5 ~ 6	No CT combination
With the use of an external CT	100	10 ~ 120	100:05:00
	150	15 ~ 180	150:05:00
	200	20 ~ 240	200:05:00
	300	30 ~ 360	300:05:00
	▼	▼	▼

SS+2CT combination

Select EOCR Type for Each 3-phase Motor Capacity

Current Setting (Continuous Variable Setting) (A)	Applied 3-phase Induction Motor Capacity (kW/HP)						TYPE	Applied Electric Cable Specifications		Other
	AC220 (V)			AC380/440 (V)				Thickness (㎟)	Allowed Current (A)	
	kW	HP	Current (A)	kW	HP	Current (A)				
0.5 ~ 6	0.75	1	4.8	1.5	2	4.2 / 3.6	5	3.5	28	Built-in CT (Standard)
* 3.0 ~ 30	2.2	3	11	11	15	25 / 21	30	5.5	38	
5.0 ~ 60	5.5	7.5	26	22	30	49 / 46	60	5.5~14	67	
10 ~ 120	22	30	93	37	50	84 / 73	100:05:00	38	130	For External CT Combination
20 ~ 240	37	50	160	75	100	163 / 141	200:05:00	100	240	
30 ~ 360	55	75	230	132	175	263 / 227	300:05:00	250	430	
40 ~ 480	95	125	360	190	250	376 / 325	400:05:00	325	495	
50 ~ 600	110	150	440	220	300	423 / 390	500:05:00	400	565	
60 ~ 720	150	200	570	300	400	602 / 520	600:05:00	500	625	

** No 30Type for digital types.*

Motor's Operating Current and EOCR Settings

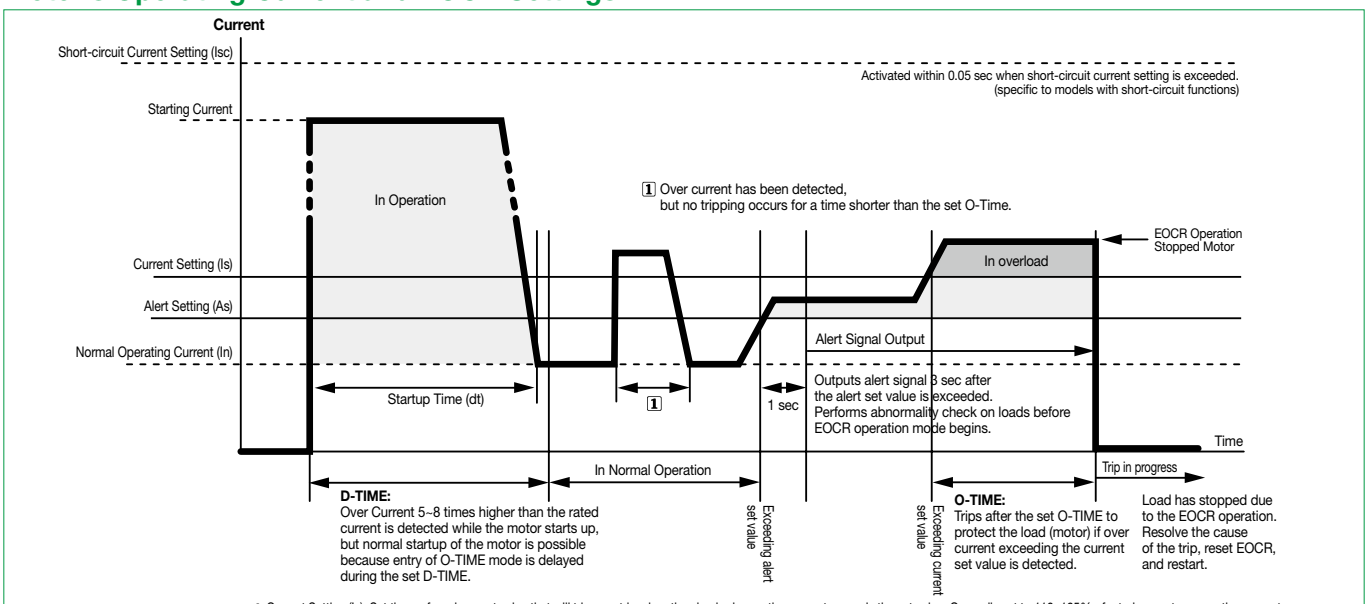

- Current Setting (Is): Set the preferred current value that will trigger a trip when the checked operating current exceeds the set value. Generally set to 110~125% of rated current or operating current.
- Alert Setting (As): Checks load factor of operating current and sets alert load factor. This can be set to within the 50~100% range of current set value.

Over current and time setting tips.

■ Setting tips in definite TCC mode

1. Over current threshold (OC)

Set the OC at the rating current of a motor. To protect machine together, it is recommended to set at 110~120% of the actual normal operating current.

2. Starting delay time (D-time)

Set an expected start-up time to reach the normal speed of load. If you do not know it, set to 15sec at first and start-up the motor to measure the time to reach the normal operation speed by monitoring the displayed current and then change the time into 2 sec longer than the time measured. For a Y-D start, it's better to set time longer than the preset time of the timer by 2sec minimum normally.

3. Operation time (O-time)

Set the trip delay time which activates and counts down under a fault condition.

■ Setting tips in inverse or thermal inverse TCC mode

1. Over current (OC) : Set the OC at the rating current of a motor.

2. Starting delay time (D-time)

Usually, set D-time to zero. With zero D-time, the cold curve is applied before the load current cross down the OC, and then the hot curve is applied.

If the start-up time is long and fast trip is required during motor running, set D-time to start-up time or longer. In this case, over current protection is blocked during the start-up, and the hot curve is applied when D-time expires.

Since thermal inverse has no relation with D-time, set D-time to zero when the thermal inverse is selected.

3. Operation time (O-time)

It has 30 curves of 1~30 which conforms to the IEC947-4-1 standard.

The class value approximately equals to the time to trip under 550% of overload by the cold curve characteristic.

General Precautions (For All)

- Operating power supply must be properly connected and supplied to the operating power supply terminal. You are recommended to check the wiring diagram specified in the instruction manual or catalog before performing the wiring operation, as EOCR burnout or a system short circuit may occur if it is incorrectly wired to the output terminal.
- Comply with the following when performing the wiring operation:
  - Refer to 3-wire diagram for accurate wiring, and connect terminals and electric cables properly so that full contact can be maintained.
  - When tightening bolts, use an electric screwdriver to maintain the rated torque. When using a regular screwdriver manually, prevent abrasion of the bolts by taking care not to apply excessive force at the last phase of the screw tightening, and use appropriate tools for the bolts.
- CT attached to EOCR is to detect current for the operation of EOCR, and should not be used for other purposes. Do not apply excessive force to the electric cables to penetrate them through holes, as this may lead to CT damage.
- The operator must press the test button periodically at the site to confirm that the protection relay is functioning correctly in order to ensure that the motor is well protected.
- While carrying or installing EOCR, avoid dropping it or subjecting it to severe shock. In such cases, use the test button to confirm that the product is intact or contact a Schneider Electric after sales service center for assistance.
- In power systems where frequency converters (e.g., inverters) are used, supply the power to operating power supply via double winding trance as shown in the sample wiring diagram, as EOCR may be affected by harmonic wave or other noises generated from those devices.
- For after-sales service related to the valid life cycle of EOCR, please refer to the instruction manual.
- For EOCR, please notice the difference between N Type and R Type products for analog circuit products of each model and select the most appropriate one to serve you best consideration the product characteristics. Although digital EOCR has the identical functions, NVR (No Volt Release) function should be selected using either the built-in DIP switch or Mode button depending on the model.
- The precautions pertaining to usage environment are as follows:
  - Temperature must be kept at -30~80℃ for storage and -20~60℃ for operation. Do not use products in any other temperature conditions.
  - The product can only be used if the humidity is 30~85%RH without any dew condensation.
  - In locations with high amounts of dust, the inner circuit may be interfered with by dust. Please make sure that no dust enters the product during installation and operation, and clean it periodically.
- When configuring sequence with this product, it is also recommended to install some varistors on both ends of the magnetic contactor coil for increased system stability.
- As a rule of thumb, fuse should be installed on both axes of the primary and secondary Tr. for operating power supply. However, when using one of the 3 phases and neutral line for the operating power supply, there is no need to install a fuse on the neutral line.

1. Current Relay for Alternating Current (AC)

- **EOCR-SS**
  (static & electronic over current relay developed to address the drawbacks of existing thermal/ induction relays)
- **EOCR-AR**
  (auto-resettable electronic over current relay)
- **EOCR-SP (01. 10. 20)**
  (micro electronic over current relay designed to be directly coupled with magnetic contactors)
- **EOCR-SP (40)**
  (micro electronic over current relay designed to be directly coupled with magnetic contactors)
- **EOCR-SE2**
  (economical electronic over current relay)
- **EOCR-DS1 (T)**
  (ultra-slim motor protection relay with 2 separate output terminals (1a1b) and 3CT)
- **EOCR-DS3 (T)**
  (ultra-slim motor protection relay with 2 separate output terminals (1a1b) and 3CT)
- **EUCR**
  (electronic under current (light-load) relay)
- **EOCR-DG (T)**
  (multi-functional relay which has earth fault protection function with residual current detection method)
- **EOCR-DZ (T)**
  (multi-functional relay which has earth fault protection function with zero phase current detection method)
- **EOCR-4E**
  (Multi-purpose current relay with short-circuit, earth fault functions)

EOCR-SS

Static & electronic over current relay developed to resolve the drawbacks of previous thermal/induction relays

Advanced

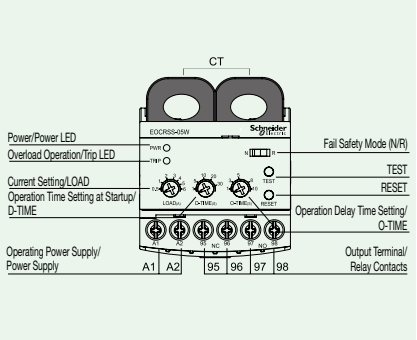

Standard

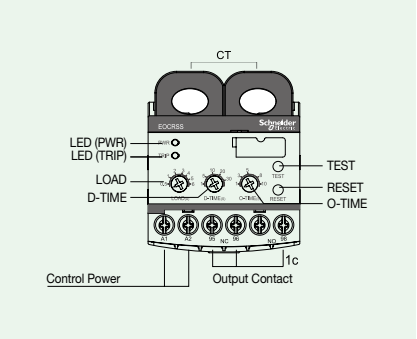

- Micro compact size
- Protection against over current/phase loss/locked rotor (phase loss/locked rotor operates by over current)
- Separate setting for startup delay/operation delay time
- Relay resistant to vibration and short-circuit applied (1a1b applied) * 1c for standard type
- Integrated AC/DC operating power supply (Free voltage) * AC 100~240V for standard type
- Operation display and active current check (LED)
- Manual (instant)/electrical reset
- Capable of protecting the motor with precisely applied MCU
- N Type, R Type integration (can select Dip switch) * R-type only for standard type
- NVR (No Volt Release) function / Fail Safe
- Super power-saver and strong environmental resistance

Usage

- Under voltage induction motor (600V)/High voltage motor(3.3kV) protective relay (uses high voltage CT)
- Shock relay by specialized machine
- Current relay for fault monitoring
- For replacement of thermal protective relay

Protection Function

Protected Items	Operation Time
Over Current	O-TIME
Phase Loss	O-TIME
Locked Rotor	O-TIME + D-TIME

LED

Current System Functions Detailed Setting	With current setting, the LED flickers when the current indicator of the setting knob is at 100% of the active load current. This means that it is possible to proceed with the setting after checking the active current, and a setting of up to 103% is possible.
Operation/Operation Display	Relay Operation: Red Power Supplied/Normal operation: Green

Manual (Instant) Reset/Electrical Reset

Press the RESET button or cut the power (L1, L2) - install SW. in remote locations, remote reset function available

Setting

Set as follows after completing the installation.

Category	Setting Knob	Method
Start Delay Time	D-TIME	Turn the D-TIME Knob to set it based on the startup time of the motor
Operation Time	O-TIME	Turn the O-TIME Knob to set at the desired operation time
Current	LOAD	1. After starting the motor, gradually turn the LOAD Knob counterclockwise from the max. value to find the spot at which the LED begins to flicker (active current point) 2. To set to 103%, turn the Knob clockwise to find a spot where the LED is turned off - If this method seems inconvenient, simply set it to 110%~125% of the active current value (item 1).

TEST Method

- After all wiring tasks are complete, if control power is supplied and the Test button is pressed and held, the red LED will illuminate. If the output contact operates when the set D-TIME and O-TIME elapse, it is working properly, and its operating status is normal.
- Press the Reset button or cut the control power to immediately reset.
- If the control power functions properly, but the green LED does not, repair service is required.

※ Test function is available only after the motor has stopped.

Operation Display

Condition	PWD LED		TRIP LED	
Power Supply	Flicker		Lights-out	
In Operation	Flicker		Flicker	
Normal operation	Lights-on		Lights-out	
In Overload	Lights-on		Lights-on	
Upon operation/trip	Lights-out		Lights-on	

EOCR-SS

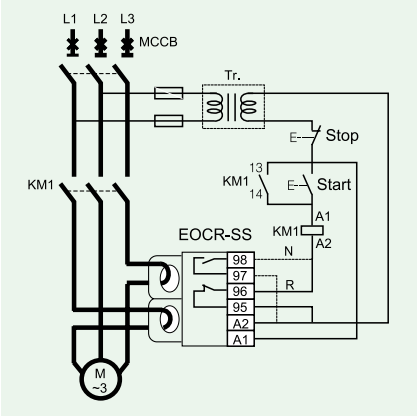

※ "N"(Fail safe)Type converts 95-/-96 to open and 95-|-98 to close when operating power is supplied to A1 and A2 (or L1 and L2).

Specifications

Current Setting		Type	Setting Range
		5	0.5 ~ 6A
		30	3.0 ~ 30A
		60	5.0 ~ 60A
		60 ~ 400	Used in combination of 05Type and an external CT (external CT current transformer ratio: 100/5A~400/5A)
Time Setting	Start Delay Time	D-TIME	0.5 ~ 30 sec
	Operation Time	O-TIME	0.5 ~ 10 sec
Re set			Manual (Instant)/Electrical (Remote) Reset
Operation Time Characteristic			Definite
Error Tolerance		Current	±10%
		Time	±15%
Operating Power Supply	Voltage	S (advanced)	24~240V AC/DC
		W (advanced)	380~480V AC
		U (standard)	100~240V AC/DC
	Frequency		50/60Hz
Auxiliary Contact	Format		Advanced: 2-SPST (1a1b), Standard: 1-SPDT (1c)
	State	R Type	Normally de-energized (regardless of power supply: 95-96 Close, 97-98 Open)
		N Type	Normally energized (after power is supplied: 95-96 Open, 97-98 Close)
	Rated		AC250V/3A resistive load
Insulation	Resistance	Between case and circuit	100㏁ or higher with a DC500V Megger
	Withstanding Voltage	Between case and circuit	2.0kV power frequency for 1 min
		Between contacts	1.0kV power frequency for 1 min
		Between circuits	2.0kV power frequency for 1 min
Usage Environment	Temperature	For storage	-30~80 ℃
		For operation	-20~60 ℃
	Humidity		30~85% RH with no dew condensation
Attachment			35mm DIN Rail/Panel

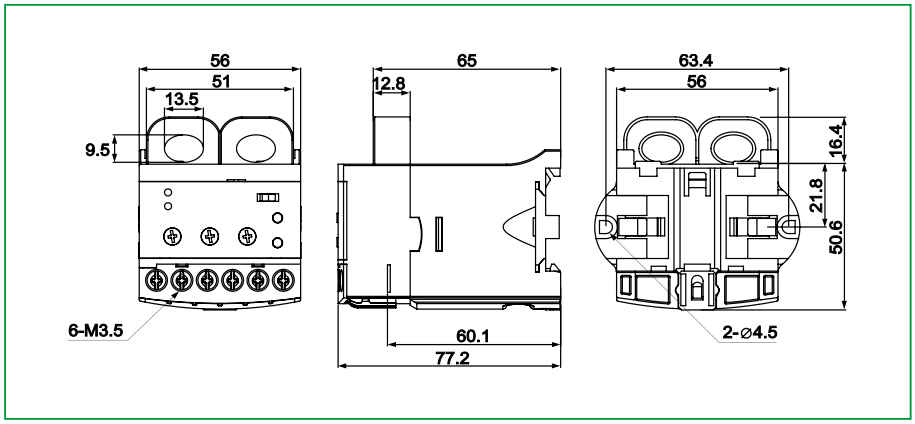

How to Order

Reference		Current Range [A]	CT	Output Contact	Operating Power Supply		Notes
					Voltage [V]	Frequency [Hz]	
EOCRSS Advanced	-05S	0.5~6	-	Select N/R, 2-SPST (1a1b)	AC/DC 24~240V	50/60	For both Panel/DIN rail
	-05W	0.5~6	-	Select N/R, 2-SPST (1a1b)	AC 380~440V	50/60	For both Panel/DIN rail
	-05SQ	0.5~6	-	Select N/R, 2-SPST (1a1b)	AC/DC 24~240V	50/60	For both Panel/DIN rail, product for CCC certification
	-D1S	100:5	100:5	Select N/R, 2-SPST (1a1b)	AC/DC 24~240V	50/60	Rectangular all-in-one 2CT combination
	-DHS	150:5	150:5	Select N/R, 2-SPST (1a1b)	AC/DC 24~240V	50/60	Rectangular all-in-one 2CT combination
	-D2S	200:5	200:5	Select N/R, 2-SPST (1a1b)	AC/DC 24~240V	50/60	Rectangular all-in-one 2CT combination
	-D3S	300:5	300:5	Select N/R, 2-SPST (1a1b)	AC/DC 24~240V	50/60	Rectangular all-in-one 2CT combination
	-D4S	400:5	400:5	Select N/R, 2-SPST (1a1b)	AC/DC 24~240V	50/60	Rectangular all-in-one 2CT combination
	-D1W	100:5	100:5	Select N/R, 2-SPST (1a1b)	AC 380~440V	50/60	Rectangular all-in-one 2CT combination
	-DHW	150:5	150:5	Select N/R, 2-SPST (1a1b)	AC 380~440V	50/60	Rectangular all-in-one 2CT combination
	-D2W	200:5	200:5	Select N/R, 2-SPST (1a1b)	AC 380~440V	50/60	Rectangular all-in-one 2CT combination
	-D3W	300:5	300:5	Select N/R, 2-SPST (1a1b)	AC 380~440V	50/60	Rectangular all-in-one 2CT combination
	-D4W	400:5	400:5	Select N/R, 2-SPST (1a1b)	AC 380~440V	50/60	Rectangular all-in-one 2CT combination
	-30S	3~30	-	Select N/R, 2-SPST (1a1b)	AC/DC 24~240V	50/60	For both Panel/DIN rail
	-30W	3~30		Select N/R, 2-SPST (1a1b)	AC 380~440V	50/60	For both Panel/DIN rail
	-30SQ	3~30		Select N/R, 2-SPST (1a1b)	AC/DC 24~240V	50/60	For both Panel/DIN rail, product for CCC certification
	-60S	5~60		Select N/R, 2-SPST (1a1b)	AC/DC 24~240V	50/60	For both Panel/DIN rail
	-60W	5~60		Select N/R, 2-SPST (1a1b)	AC 380~440V	50/60	For both Panel/DIN rail
	-60SQ	5~60		Select N/R, 2-SPST (1a1b)	AC/DC 24~240V	50/60	For both Panel/DIN rail, product for CCC certification
EOCRSS Standard	-05RU	0.5~6	-	R type, 1-SPDT (1c)	AC/DC 100~240V	50/60	For both Panel/DIN rail
	-30RU	3~30	-	R type, 1-SPDT (1c)	AC/DC 100~240V	50/60	For both Panel/DIN rail
	-60RU	5~60	-	R type, 1-SPDT (1c)	AC/DC 100~240V	50/60	For both Panel/DIN rail
	-D1RU	100:5	100:5	R type, 1-SPDT (1c)	AC/DC 100~240V	50/60	Rectangular all-in-one 2CT combination
	-DHRU	150:5	150:5	R type, 1-SPDT (1c)	AC/DC 100~240V	50/60	Rectangular all-in-one 2CT combination
	-D2RU	200:5	200:5	R type, 1-SPDT (1c)	AC/DC 100~240V	50/60	Rectangular all-in-one 2CT combination
	-D3RU	300:5	300:5	R type, 1-SPDT (1c)	AC/DC 100~240V	50/60	Rectangular all-in-one 2CT combination
	-D4RU	400:5	400:5	R type, 1-SPDT (1c)	AC/DC 100~240V	50/60	Rectangular all-in-one 2CT combination

•Accessory

Accessory1			
Model	**Reference**	**CT Current Transformer Ratio**	**Notes**
2CT	2CT-D1-100-C	100:5	Rectangular 2CT
	2CT-D2-200-C	200:5	Rectangular 2CT
	2CT-D3-300-C	300:5	Rectangular 2CT
	2CT-D4-400-C	400:5	Rectangular 2CT

Ordering Example

e.g., To order an EOCR-SS:

E O C R S S – 0 5 S Advanced

❶ ❷

❶	**Current Setting Range**	**5**	0.5-6A	For 60A or higher, combine 05Type and an external CT (secondary 5A) for use
		30	3.0-30A	
		60	5.0-60A	
❷	**Operating Power Supply**	**S**	24~240V AC/DC	
		W	380~440V AC	

※*For a CT combination type, please write an accessory code from the CT Order Codes separately.*

E O C R S S – 0 5 R U Standard

❶ ❷ ❸

❶	**Current Setting Range**	**5**	0.5-6A	For 60A or higher, combine 05Type and an external CT (secondary 5A) for use
		30	3.0-30A	
		60	5.0-60A	
❷	**Output Power**	**R**	R Type	
❸	**Operating Power Supply**	**U**	100~240V AC/DC	

※*Contacts are 2-SPST (1a1b) for advanced and 1-SPDT (1c) for standard.*

e.g., To order a 2CT:

2 C T – D 1 – 1 0 0 – C

❶

❶	**CT Current Transformer Ratio**	**D1**	100	Rectangular 2CT 100:5
		D2	200	Rectangular 2CT 200:5
		D3	300	Rectangular 2CT 300:5
		D4	400	Rectangular 2CT 400:5

EOCR-AR

Auto-resettable Electronic Over Current Relay

- Micro compact size
- Protection against over current/phase loss/locked rotor (phase loss/locked rotor operates by over current)
- Start delay/operation delay time integral type
- Wide setting range: Protects up to 0.1~400A with 3 types
- Operation display and active current check (red LED)
- Strong environmental resistance
- Super energy-saver
- Auto reset (reset time setting)/manual reset
- No volt release / Fail-safe Operation→ N type

※ Single-phase/3-phase available

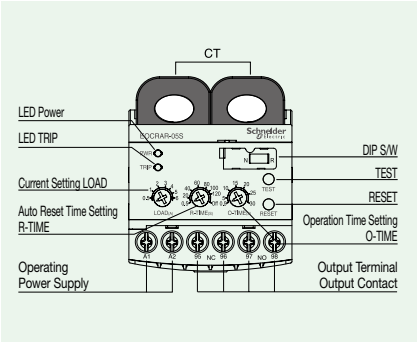

Usage

- Auto reset function appropriate for unmanned installations.

Protection Function

Protected Items	Operation Time
Over Current	O-TIME
Phase Loss	O-TIME
Locked Rotor	O-TIME

Specifications

Current Setting		Type	Setting Range
		5	0.5~6A
		30	3.0~30A
		60	5.0~60A
		60~400	Used by combining 05Type and an external CT (external CT current transformer ratio: 100/5A~400/5A)
Time Setting	Operation Time	O-TIME	0.5~30 sec
	Reset Time	R-TIME	0.5~120 sec
Reset			Auto reset / manual (instant) reset / electrical (remote) reset
Operation Time Characteristic			Definite
Operating Power Supply	Voltage	S	24~240V AC/DC
		W	380~440V AC
	Frequency		50/60Hz
Auxiliary Contact	Type		2-SPST (1a1b)
	State	R Type	Normally de-energized (regardless of power supply: 95-96 Close, 97-98 Open)
		N Type	Normally energized (after power is supplied: 95-98 Open, 97-98 Close)
	Rating		AC250V / 3A resistive load
Attachment			35mm DIN Rail / Panel

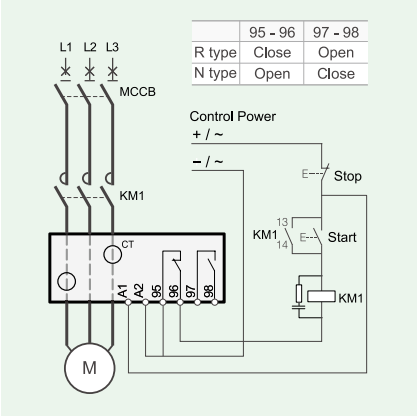

※ *"N"(Fail safe)Type converts 95-┤├-96 to open and 97-┤├-98 to close when operating power is supplied to A1 and A2 (or L1 and L2).*

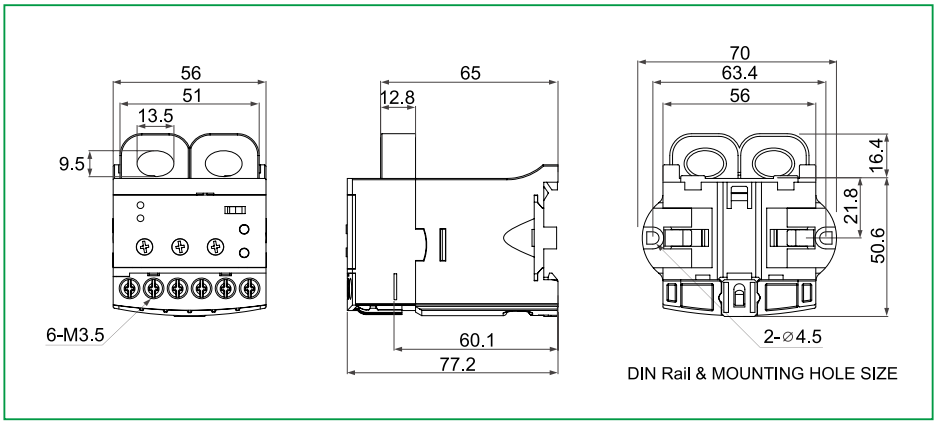

EOCR-AR

How to Order

Reference		Current Range [A]	CT	Operating Power Supply		Notes
				Voltage [V]	Frequency [Hz]	
EOCRAR	- 05S	5	-	AC/DC 24~240	DC, 50/60	-
	- 05W	5	-	AC 380~440	50/60	-
	- D1S	5	100:5	AC/DC 24~240	DC, 50/60	Rectangular all-in-one 2CT combination
	- DHS	5	150:5	AC/DC 24~240	DC, 50/60	Rectangular all-in-one 2CT combination
	- D2S	5	200:5	AC/DC 24~240	DC, 50/60	Rectangular all-in-one 2CT combination
	- D3S	5	300:5	AC/DC 24~240	DC, 50/60	Rectangular all-in-one 2CT combination
	- D4S	5	400:5	AC/DC 24~240	DC, 50/60	Rectangular all-in-one 2CT combination
	- D1W	5	100:5	AC 380~440	50/60	Rectangular all-in-one 2CT combination
	- DHW	5	150:5	AC 380~440	50/60	Rectangular all-in-one 2CT combination
	- D2W	5	200:5	AC 380~440	50/60	Rectangular all-in-one 2CT combination
	- D3W	5	300:5	AC 380~440	50/60	Rectangular all-in-one 2CT combination
	- D4W	5	400:5	AC 380~440	50/60	Rectangular all-in-one 2CT combination
	- 30S	30	-	AC/DC 24~240	DC, 50/60	-
	- 30W	30	-	AC 380~440	50/60	-
	- 60S	60	-	AC/DC 24~240	DC, 50/60	-
	- 60W	60	-	AC 380~440	50/60	-

• Accessory

Accessory1			
Model	Reference	CT Current Transformer Ratio	Notes
2CT	2CT-D1-100-C	100:5	Rectangular 2CT
	2CT-D2-200-C	200:5	Rectangular 2CT
	2CT-D3-300-C	300:5	Rectangular 2CT
	2CT-D4-400-C	400:5	Rectangular 2CT

Ordering Example

e.g., To order an EOCR-AR:

E O C R A R – 0 5 S

❶ ❷

❶	Current Range	5	0.5~6A	For 60A or higher, combine 05Type and an external CT (secondary 5A) for use
		30	3~30A	
		60	5~60A	
❷	Operating Power Supply	S	24~240V AC/DC	
		W	380~440V AC	

※*For a CT combination type, please write an accessory code from the CT Order Codes separately.*

e.g., To order a 2CT:

2 C T – D 1 – 1 0 0 – C

❶

❶	CT Current Transformer Ratio	D1	100	Rectangular 2CT 100:5
		D2	200	Rectangular 2CT 200:5
		D3	300	Rectangular 2CT 300:5
		D4	400	Rectangular 2CT 400:5

EOCR-SP

Micro electronic over current relay designed to be directly coupled with magnetic contactors

- Built-in MCU (Microprocessor Control Unit)
- Can be directly coupled with all domestic/imported magnetic contactors (MC)
- Various protection functions
- Operating current check: Red LED
- Operation display and trip cause check: Red/Green LED
- Manual (instant)/electrical (remote) reset
- Strong environmental resistance
- Super energy-saver
- No-voltage release/Fail-safe operation→ N type

※ SP is single-phase/3-phase compatible

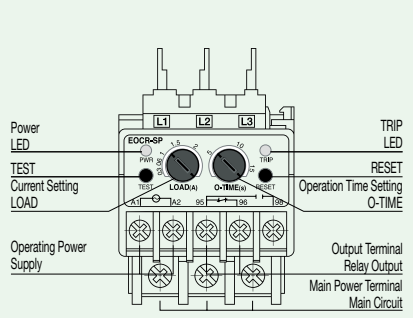

EOCR-SP

Protection Functions and Characteristics

Model	Type	Protection Function			Operation Characteristics	Time Setting	
		Over Current	Phase Loss	Locked Rotor		Start Delay	Operation Time
SP	01, 10, 20	○	△	△	Definite	×	0.5~15 sec
	40	○	○	△	Definite	0.5~30 sec	0.5~10 sec

- Phase loss and locked rotors protection for SP are operated by over current.
- 40Type phase loss of SP operates within 4 sec (only protects L1 and L3 phases)

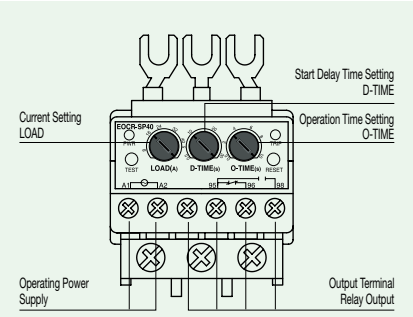

EOCR-SP40

Trip Cause Check (for SP40)

Condition			LED Signal (Pulse Chart)			
			Green LED		Red LED	
Power Supply			Flicker		Lights-out	
In Operation			Flicker		Flicker	
Normal operation			Lights-on		Lights-out	
In overload			Lights-on		Flicker	
Upon operation /trip	Over Current		Lights-out		Lights-on	
	Locked Rotor		Lights-out		Flicker	
	Phase Loss	L1	Lights-out		Repeats flickering once	
		L2	Lights-out		Repeats flickering 2 times	
		L3	Lights-out		Repeats flickering 3 times	

※ For the SP models, only the green LED flickers when it is supplied with power. When operated (tripped) by over current, the green LED is turned off and only the red LED is illuminated.

※ For the SP 40 model, the green LED flickers once at every interval when supplied with power. When operated (tripped) by over current, the green LED is turned off and only the red LED is illuminated.

High compatibility, can be directly coupled with all domestic/foreign magnetic contactors

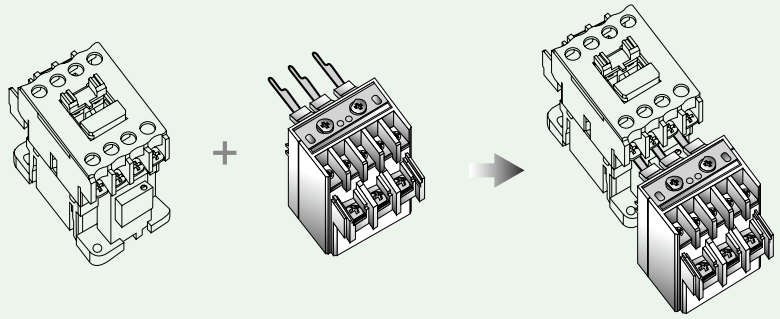

Magnetic Contactor (MC) + EOCR → Electronic Switch (EOCR+MC)

EOCR-SP

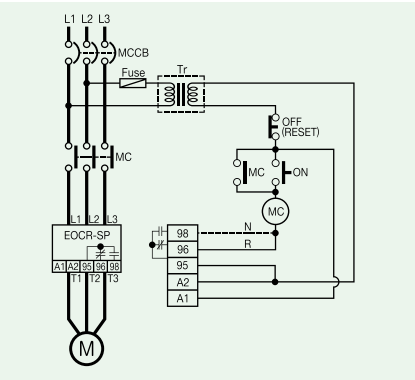

EOCR-SP

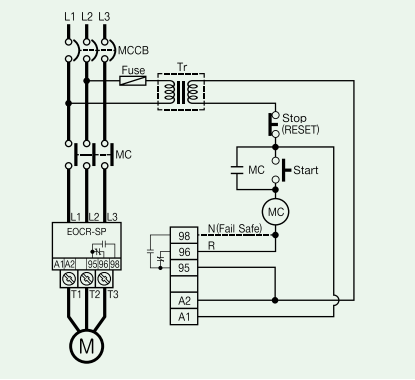

EOCR-SP(40Type)

※ *"N"(Fail safe) Type converts 95┤├96 to open and 97┤├98 to close when operating power is supplied to A1 and A2 (or L1 and L2).*

Specifications

Current Setting		Type	Setting Range		
		1	0.3~1.2A		SP
		10	1~12A		SP
		20	5~25A		SP
		40	8~40A		SP40
Time Setting	Start Delay Time	D-TIME	Protection Functions and Characteristics (see p.233)		
	Operation Time	O-TIME	Protection Functions and Characteristics (see p.233)		
Reset			Manual (instant)/electrical reset		
Operation Time Characteristic			Definite		
Operation Display			LED Lamp (trip cause check, see p.233)		
Operating Power Supply	Voltage	SP (01,10,20)	R Type : AC90~260V		Other AC/DC 24V
		SP (40)	N Type : AC110V	AC85~150V	
			N Type : AC220V	AC180~260V	
	Frequency		50/60Hz		
Auxiliary Contact	SP	SPDT (1c)	AC250V/3A resistive load		
Attachment			Electric Contactor (direct-coupled)		

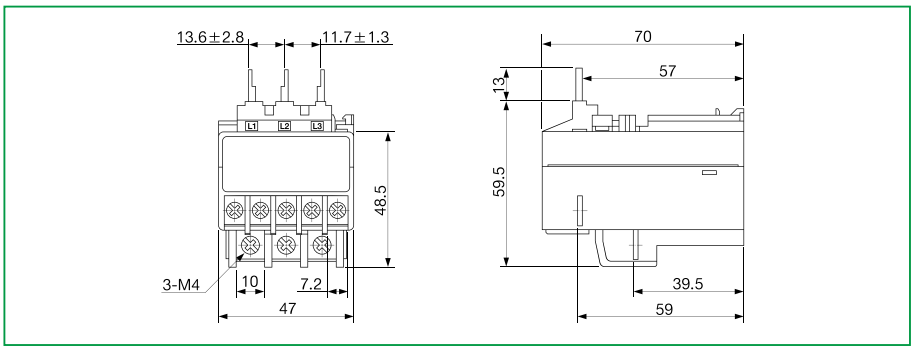

EOCR-SP

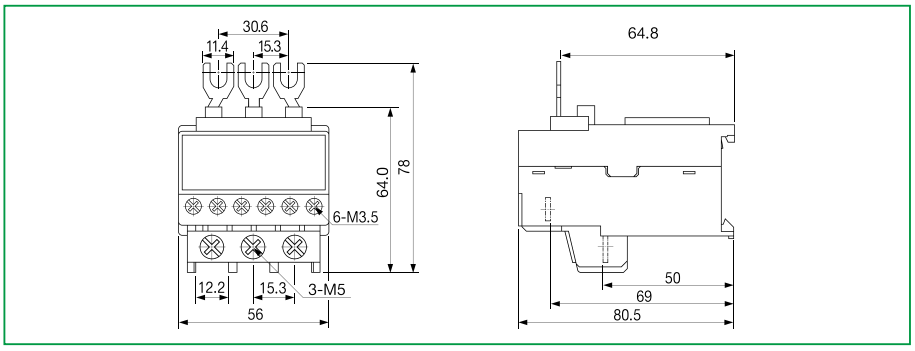

EOCR-SP(40Type)

How to Order

Reference		Current Range [A]	Contact Output	Operating Power Supply		Notes
				Voltage [V]	Frequency [Hz]	
EOCRSP	-01NF7	1	N	AC 110V	50/60	Direct-coupled, Definite
	-01NM7	1	N	AC 220V	50/60	Direct-coupled, Definite
	-01RY7	1	R	AC220V(90~260)	50/60	Direct-coupled, Definite
	-10NF7	10	N	AC 110V	50/60	Direct-coupled, Definite
	-10NM7	10	N	AC 220V	50/60	Direct-coupled, Definite
	-10RY7	10	R	AC220V(90~260)	50/60	Direct-coupled, Definite
	-20NF7	20	N	AC 110V	50/60	Direct-coupled, Definite
	-20NM7	20	N	AC 220V	50/60	Direct-coupled, Definite
	-20RY7	20	R	AC220V(90~260)	50/60	Direct-coupled, Definite
	-40RM7	40	R	AC 220V	50/60	Direct-coupled, Definite
	-40RF7	40	R	AC 110V	50/60	Direct-coupled, Definite
	-40RB	40	R	AC/DC 24V	50/60	Direct-coupled, Definite
	-40NM7	40	N	AC 220V	50/60	Direct-coupled, Definite
	-40NF7	40	N	AC 110V	50/60	Direct-coupled, Definite
	-40NB	40	N	AC/DC 24V	50/60	Direct-coupled, Definite

Ordering Example

e.g., To order an EOCR-SP:

E O C R S P – 0 1 N F 7

❶ ❷ ❸

❶	**Current Range**	**1**	0.3~1.2A
		10	1~12A
		20	5~25A
		40	8~40A
❷	**Output Contact State**	**N**	Normally Energized
		R	Normally De-energized
❸	**Operating Power Supply/ Frequency**	**B**	AC/DC24V Compatible
		Y7	AC90~260V, 50/60Hz (SP R Type)
		F7	AC110V, 50/60Hz (SP N Type)
		M7	AC220V, 50/60Hz (SP N Type)

EOCR-SE2

Economical Electronic Over Current Relay

EOCR-SE2

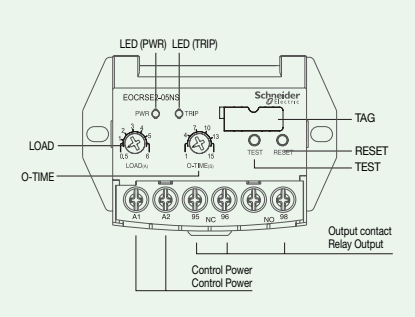

※ Micro compact size
- Over current/phase loss/locked rotor protection (phase loss/locked rotor is operated by over current)
- Start delay/operation delay all-in-one type
- Manual (reset)/electrical (remote) reset
- Super energy-saver
- No-voltage release/Fail-safe operation→ N type
- Appropriate for protection of direct on line/universal small-sized motor
- Easy wiring

Protection Function

Protected Items	Operation Time
Over Current	O-TIME
Phase Loss	O-TIME
Locked Rotor	O-TIME

Usage

- For protection of universal motors
- For protection of direct on line small-sized motors

Specifications

Current Setting		Type	Setting Range
		5	0.5~6A
		30	3.0~30A
		60	5.0~60A
Operation Time Setting		O-TIME	0.5~15 sec
Reset			Manual (instant)/electrical (remote) reset
Operation Time Characteristic			Definite
Operating Power Supply	Voltage		24~240V AC/DC
	Frequency		50/60Hz
Auxiliary Contact	Type		1-SPDT (1c)
	State	R	Normally de-energized
		N	Normally energized
	Rating		AC250V/3A resistive load
Attachment			For both Panel/35mm DIN Rail

EOCR-SE2

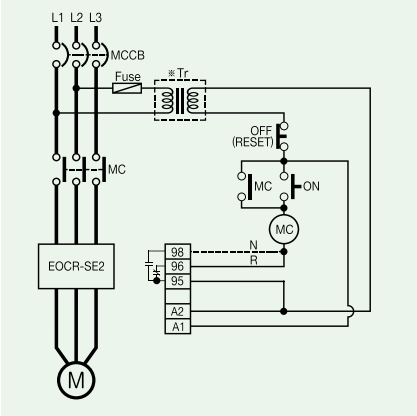

EOCR-SE2

※"N"(Fail safe)Type converts 95┤├96 to open and 95(97)┤├98 to close when operating power is supplied to A1 and A2 (or L1 and L2).

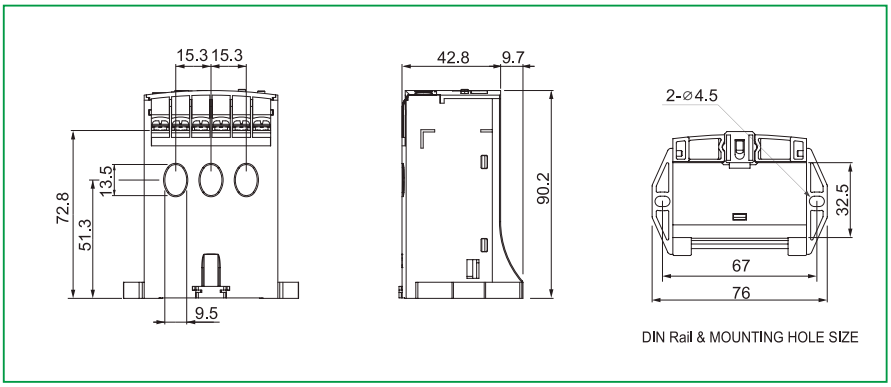

EOCR-SE2

How to Order

Reference		Current Range [A]	Output Contact	Operating Power Supply		Notes
				Voltage [V]	Frequency [Hz]	
EOCRSE2	-05NS	5	N	24~240V AC/DC	50/60	For both Panel/DIN Rail
	-05RS	5	R	24~240V AC/DC	50/60	For both Panel/DIN Rail
	-30NS	30	N	24~240V AC/DC	50/60	For both Panel/DIN Rail
	-30RS	30	R	24~240V AC/DC	50/60	For both Panel/DIN Rail
	-60NS	60	N	24~240V AC/DC	50/60	For both Panel/DIN Rail
	-60RS	60	R	24~240V AC/DC	50/60	For both Panel/DIN Rail

Ordering Example

e.g., To order a EOCR-SE2:

E O C R S E 2 – 0 5 N S

❶ ❷ ❸

❶	**Current Range**	**5**	0.5~6A
		30	3~30A
		60	5~60A
❷	**Output Contact State**	**N**	Normally Energized
		R	Normally De-energized
❸	**Operating Power Supply/Frequency**	**S**	24~240V AC/DC, 50/60Hz

EOCR-DS1 (T)/DS3 (T)

EOCR-DS1(T) / DS3(T)

- Built-in MCU (Microprocessor Control Unit)
- Micro Slim Design
- Various protection functions
- Separate settings for start delay time and operation time
- Operating current check: Red LED
- Operation display and trip cause check
- Manual (instant)/electrical reset
- Strong environmental resistance
- Super energy-saver
- No-voltage release/Fail-safe operation→ N type

※ (T): Terminal Type
※ AC/DC Operating Power Supply Integration (Free voltage)
※ DS1(T), DS3(T): for 3-phase
※ Can select N/R via frontal DIP SW, can set reverse phase to ON/OFF

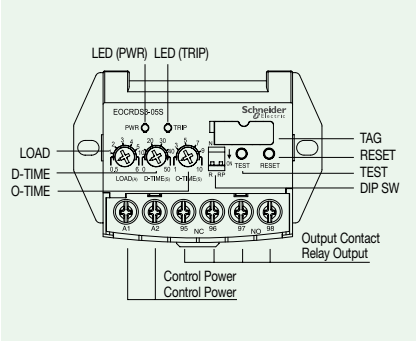

EOCR-DS

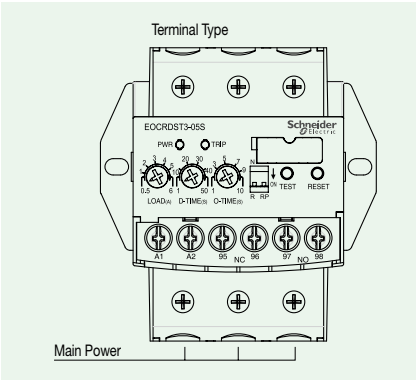

EOCR-DST

Protection Functions and Characteristics

Model	Protection Function				Operation Characteristics	Operation Time	
	Over Current	Phase Loss	Reverse Phase	Locked Rotor		Start Delay	Operation Time
DS1 (T)	○	○	○	○	Inverse	0~50 sec	1~10 sec
DS3 (T)	○	○	○	○	Definite	1~50 sec	1~10 sec

Protected Items	Operation Time
Over Current	Operates after the set O-Time
Phase Loss	Within 4 sec
Reverse Phase	Operates in 0.3 sec
Locked Rotor	Operates after the set D-Time

- Locked rotor protection operates instantly when current equal to 300% of the set current or higher flows after the set start delay time (D-TIME).
- Over Current operation time of DS1(T) depends on the Inverse characteristic curve.

Trip Cause Check

EOCR-DS1 [T]/DS3 [T]

Condition			LED Signal (Pulse Chart)			
			Green LED		Red LED	
Power Supply			Flicker		Lights-out	
In Operation			Flicker		Flicker	
Normal operation			Lights-on		Lights-out	
In overload			Lights-on		Flicker	
Upon operation /trip	Over Current		Lights-out		Lights-on	
	Locked Rotor		Lights-out		Flicker	
	Phase Loss	L1	Lights-out		Repeats flickering once	
		L2	Lights-out		Repeats flickering 2 times	
		L3	Lights-out		Repeats flickering 3 times	
	Reverse Phase		Repeats alternate flickering			

EOCR-DS1 (T)/DS3 (T)

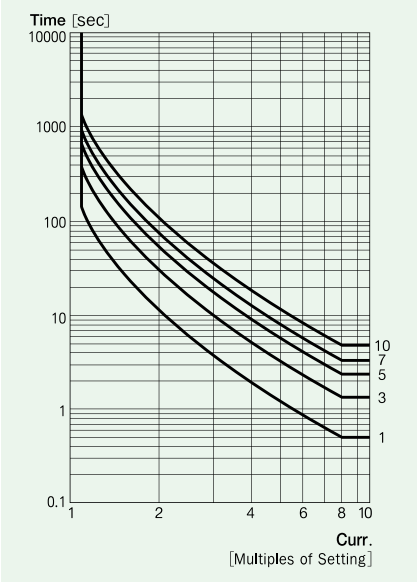

EOCR-DS1 (T)-05Type Inverse Characteristic Curve

Specifications

Current Setting		Type	Setting Range (DS1)	Setting Range (DS3)
		5	0.5~6A	0.5~6A
		30	3.0~30A	3.0~30A
		60	-	5.0~60A
Time Setting	Start Delay Time	D-TIME	0~50 sec	1~50 sec
	Operation Time	O-TIME	1~10 sec	1~10 sec
Reset			Manual (instant)/electrical (remote) reset	
Operation Time Characteristic			Inverse	Definite
Operating Power Supply	Voltage	S	24~240V AC/DC	
		W	380~480V AC	
	Frequency		50/60Hz	
Auxiliary Contact	Type		2-SPST (1a1b)	
	State	R Type	Normally de-energized (regardless of power supply: 95-96 Close, 97-98 Open)	
		N Type	Normally energized (after power is supplied: 95-98 Open, 97-98 Close)	
	Rating		AC250V/3A resistive load	
Attachment			35mm DIN Rail/Panel	

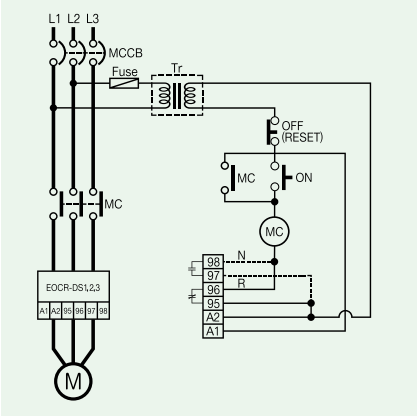

-DS1/DS3

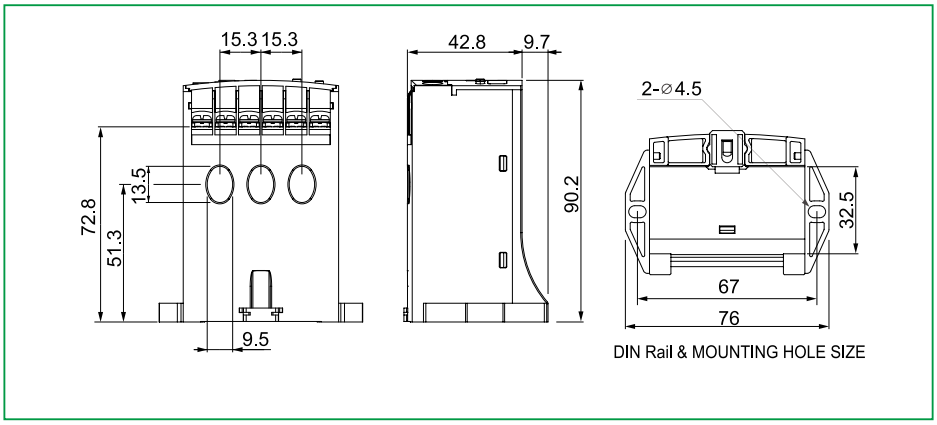

EOCR-DS1 / DS3

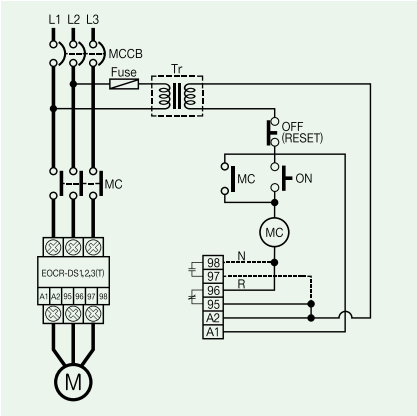

EOCR-DS1T/DS3T

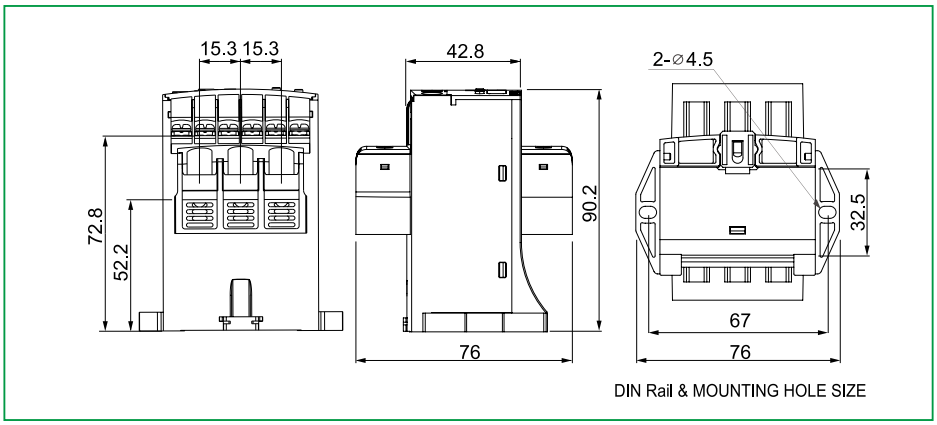

EOCR-DS1T / DS3T

※"N"(Fail safe)Type converts 95-/-96 to open and 97-|-98 to close when operating power is supplied to A1 and A2 (or L1 and L2).

EOCR-DS1 (T)/DS3 (T)

How to Order

Reference		Current Range [A]	CT	Output Contact	Operating Power Supply		Attachment
					Voltage [V]	Frequency [Hz]	
EOCRDS1	- 05S	5		Can select N/R	AC/DC 24~240V	DC or AC 50/60	For both Panel/DIN Rail
	- 05W	5		Can select N/R	AC 380~440V	50/60	For both Panel/DIN Rail
	- 30S	30		Can select N/R	AC/DC 24~240V	DC or AC 50/60	For both Panel/DIN Rail
	- 30W	30		Can select N/R	AC 380~440V	50/60	For both Panel/DIN Rail
	- H1S	5	100	Can select N/R	AC/DC 24~240V	DC or AC 50/60	For both Panel/DIN-rail, 3CT combination
	- HHS	5	150	Can select N/R	AC/DC 24~240V	DC or AC 50/60	For both Panel/DIN-rail, 3CT combination
	- H2S	5	200	Can select N/R	AC/DC 24~240V	DC or AC 50/60	For both Panel/DIN-rail, 3CT combination
	- H3S	5	300	Can select N/R	AC/DC 24~240V	DC or AC 50/60	For both Panel/DIN-rail, 3CT combination
EOCRDS1T	- 05S	5		Can select N/R	AC/DC 24~240V	DC or AC 50/60	DIN-rail
	- 05W	5		Can select N/R	AC 380~440V	50/60	DIN-rail
	- 30S	30		Can select N/R	AC/DC 24~240V	DC or AC 50/60	DIN-rail
	- 30W	30		Can select N/R	AC 380~440V	50/60	DIN-rail
EOCRDS3	- 05S	5		Can select N/R	AC/DC 24~240V	DC or AC 50/60	For both Panel/DIN Rail
	- 05W	5		Can select N/R	AC 380~440V	50/60	For both Panel/DIN Rail
	- 30S	30		Can select N/R	AC/DC 24~240V	DC or AC 50/60	For both Panel/DIN Rail
	- 30W	30		Can select N/R	AC 380~440V	50/60	For both Panel/DIN Rail
	- 60S	60		Can select N/R	AC/DC 24~240V	DC or AC 50/60	For both Panel/DIN Rail
	- 60W	60		Can select N/R	AC 380~440V	50/60	For both Panel/DIN Rail
	- H1S	5	100	Can select N/R	AC/DC 24~240V	DC or AC 50/60	For both Panel/DIN-rail, 3CT combination
	- HHS	5	150	Can select N/R	AC/DC 24~240V	DC or AC 50/60	For both Panel/DIN-rail, 3CT combination
	- H2S	5	200	Can select N/R	AC/DC 24~240V	DC or AC 50/60	For both Panel/DIN-rail, 3CT combination
	- H3S	5	300	Can select N/R	AC/DC 24~240V	DC or AC 50/60	For both Panel/DIN-rail, 3CT combination
	- H4S	5	400	Can select N/R	AC/DC 24~240V	DC or AC 50/60	For both Panel/DIN-rail, 3CT combination
EOCRDS3T	- 05S	5		Can select N/R	AC/DC 24~240V	DC or AC 50/60	For both Panel/DIN Rail
	- 05W	5		Can select N/R	AC 380~440V	50/60	For both Panel/DIN Rail
	- 30S	30		Can select N/R	AC/DC 24~240V	DC or AC 50/60	For both Panel/DIN Rail
	- 30W	30		Can select N/R	AC 380~440V	50/60	For both Panel/DIN Rail
	- 60S	60		Can select N/R	AC/DC 24~240V	DC or AC 50/60	For both Panel/DIN Rail
	- 60W	60		Can select N/R	AC 380~440V	50/60	For both Panel/DIN Rail

Ordering Example

e.g., To order an EOCR-DS1, DS3/DS1T, and DS3T:

E O C R D S 1 – 0 5 S
E O C R D S 3 – 0 5 S
E O C R D S 1 T – 0 5 S
E O C R D S 3 T – 0 5 S

❶ ❷ ❸

❶	**Current Range**	**05**	0.5~6A
		30	3~30A
		60	5~60A
❷	**Operating Power Supply/Frequency**	**S**	AC/DC 24~240V
		W	AC 380~440V

EUCR

Electronic Under Current (light-load) Relay

- Under current protection
- Wide current setting range
- Operating current check
- Definite operation time characteristics
- Manual (instant)/electrical (remote) reset
- Strong environmental resistance
- Super energy-saver
- Only R-Type products are manufactured (Non-fail-safe mode)
- Operates by under current if there is no current flow on the line (when the frontal No Load Trip switch is set to On)

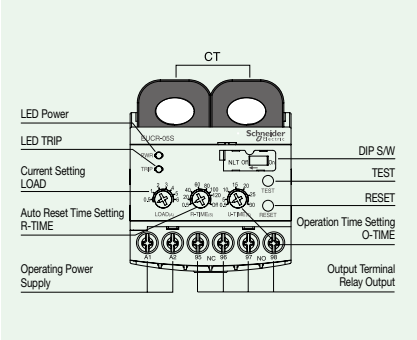

Protection Function

Protected Items	Operation Time
Under Current (light-load)	O-TIME

Specifications

Current Setting		Type	Setting Range
		5	0.5~6A
		30	3.0~30A
		60	5.0~60A
		60~400	Used by combining 05 and an external CT (external CT current transformer ratio: 100/5A~400/5A)
Time Setting	Operation Time	O-TIME	0.5~30 sec
		R-TIME	0.5~120 sec, oFF
Reset			Manual/auto electrical reset
Operation Time Characteristic			Definite
Operating Power Supply	Voltage	S	24~240V AC/DC
		W	380~440V AC
	Frequency		50/60Hz
Auxiliary Contact	Format		2-SPST (1a1b)
	State		Normally de-energized (R type)
	Rating		AC250V/3A resistive load
Attachment			35mm DIN Rail/Panel

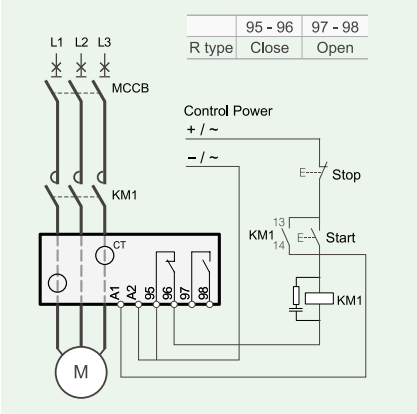

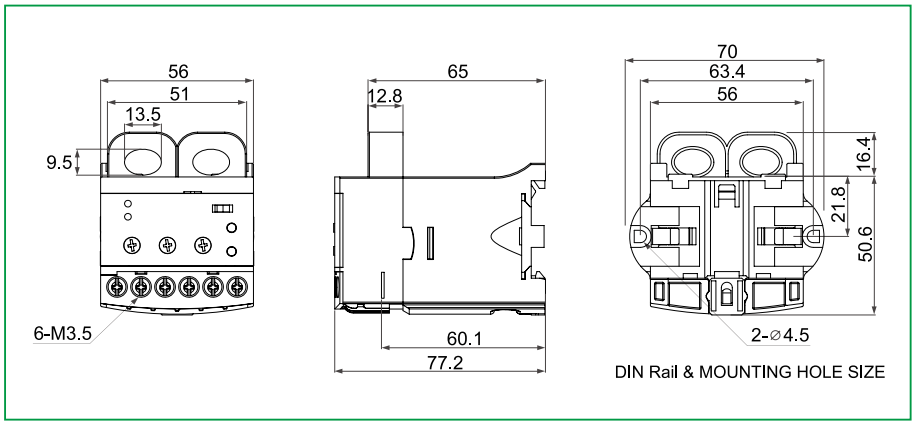

EUCR

How to Order

Reference		Current Range [A]	CT	Operating Power Supply		Notes
				Voltage [V]	Frequency [Hz]	
EUCR	- 05S	5	-	AC/DC 24~240	DC, 50/60	-
	- 05W	5	-	AC 380~440	50/60	-
	- D1S	5	100:05:00	AC/DC 24~240	DC, 50/60	Rectangular all-in-one 2CT combination
	- DHS	5	150:05:00	AC/DC 24~240	DC, 50/60	Rectangular all-in-one 2CT combination
	- D2S	5	200:05:00	AC/DC 24~240	DC, 50/60	Rectangular all-in-one 2CT combination
	- D3S	5	300:05:00	AC/DC 24~240	DC, 50/60	Rectangular all-in-one 2CT combination
	- D4S	5	400:05:00	AC/DC 24~240	DC, 50/60	Rectangular all-in-one 2CT combination
	- D1W	5	100:05:00	AC 380~440	50/60	Rectangular all-in-one 2CT combination
	- DHW	5	150:05:00	AC 380~440	50/60	Rectangular all-in-one 2CT combination
	- D2W	5	200:05:00	AC 380~440	50/60	Rectangular all-in-one 2CT combination
	- D3W	5	300:05:00	AC 380~440	50/60	Rectangular all-in-one 2CT combination
	- D4W	5	400:05:00	AC 380~440	50/60	Rectangular all-in-one 2CT combination
	- 30S	30	-	AC/DC 24~240	DC, 50/60	-
	- 30W	30	-	AC 380~440	50/60	-
	- 60S	60	-	AC/DC 24~240	DC, 50/60	-
	- 60W	60	-	AC 380~440	50/60	-

• Accessory

Accessory1			
Model	Reference	CT Current Transformer Ratio	Notes
2CT	2CT-D1-100-C	100:5	Rectangular 2CT
	2CT-DH-150-C	150:5	Rectangular 2CT
	2CT-D2-200-C	200:5	Rectangular 2CT
	2CT-D3-300-C	300:5	Rectangular 2CT
	2CT-D4-400-C	400:5	Rectangular 2CT

Ordering Example

e.g., To order an EUCR:

E U C R – 0 5 S

❶ ❷

❶	Current Range	5	0.5~6A	For 60A or higher, Combine 05Type and an external CT (secondary 5A) for use
		30	3~30A	
		60	5~60A	
❷	Operating Power Supply	S	24~240V AC/DC	
		W	380~440V AC	

※ *For a CT combination type, please write an accessory code from the CT Order Codes separately.*

e.g., To order a 2CT:

2 C T – D 1 – 1 0 0 – C

❶

❶	CT Current Transformer Ratio	D1	100	Rectangular 2CT 100:5
		DH	150	Rectangular 2CT 150:5
		D2	200	Rectangular 2CT 200:5
		D3	300	Rectangular 2CT 300:5
		D4	400	Rectangular 2CT 400:5

EOCR-DG[T]

Multi-functional relay that has earth fault protection function with residual current detection method

- Built-in MCU (Microprocessor Control Unit)
- Over current/phase loss/reverse phase/unbalance/locked rotor/earth fault protection
- Earth fault protection with residual current detection method
- Wide current setting range
- Automatic calculation of start delay time
- Operation and trip cause display
- Definite operation characteristics
- Manual (reset)/electrical (remote) reset
- Strong environmental resistance
- Super energy-saver
- No-voltage release/Fail-safe operation→ N type
- DG: Hole type, DGT: Terminal type

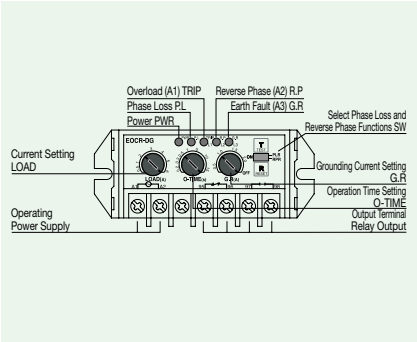

EOCR-DG

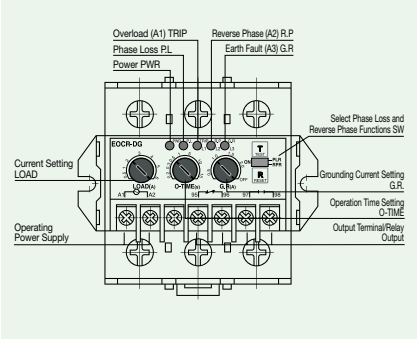

EOCR-DGT

Protection Function

Protected Items	Operation Time
Over Current	O-TIME
Phase Loss	Within 4 sec
Reverse Phase	0.1 sec
Unbalance	8 sec
Locked Rotor	After D-TIME when I > Is × 3
Earth fault	0.5 sec

Trip cause check - 5LED

		PWR	PL	OL	RP	GR
Power supply (during operation)		●	○	○	○	○
Over Current		○	○	●	○	○
Earth Fault		○	○	○	○	●
Reverse Phase		○	○	○	●	○
Phase Loss	L1 Phase Loss	○	●	●	○	○
	L2 Phase Loss	○	●	○	●	○
	L3 Phase Loss	○	●	○	○	●
Unbalance		○	● - ○	○	○	●
Locked Rotor		○	○	○ - ●	○	○

※ LED Display: ON(●), OFF(○), ON-OFF(● - ○)

Specifications

Model			EOCR-DG (T)	
Current Setting		Type	Current Setting Range	Earth Fault Current Setting Range
		5	0.5~6A	0.5~2A
		30	3.0~30A	1~5A
		30~600	Combine 05 Type and an external CT for use	0.5~2A
Time Setting	Start Delay Time	D-TIME	Automatic Calculation (up to 60 sec)	
	Operation Time	O-TIME	0.2~15 sec	
Reset			Manual (instant)/electrical (remote) reset	
Operation Time Characteristic			Definite	
Operation Display			5LED	
Error Tolerance		Current	±10%	
		Time	±10%	
Operating Power Supply	Voltage	110	AC85~150V, 50/60Hz	Other AC/DC 24V
		220	AC180~260V, 50/60Hz	
Auxiliary Contact	Capacity	2-SPST (1a1b)	AC250V/3A resistive load	
	State	R	Normally de-energized (regardless of power supply: 95-96 Close, 97-98 Open)	
		N	Normally energized (after power is supplied: 95-96 Open, 97-98 Close)	
Insulation	Resistance	Between case and circuit	10MΩ or higher with a DC500V Megger	
	Withstanding Voltage	Between case and circuit	2.0kV power frequency for 1 min	
		Between contacts	1.0kV power frequency for 1 min	
		Between circuits	2.0kV power frequency for 1 min	
Usage Environment	Temperature	For operation	-20~60℃	
		For storage	-30~80℃	
	Humidity		30~85% RH with no dew condensation	
Power Consumption			Below 2.0W	
Attachment		EOCR-DG	Panel	
		EOCR-DGT	35mm DIN Rail/Panel	

EOCR-DG[T]

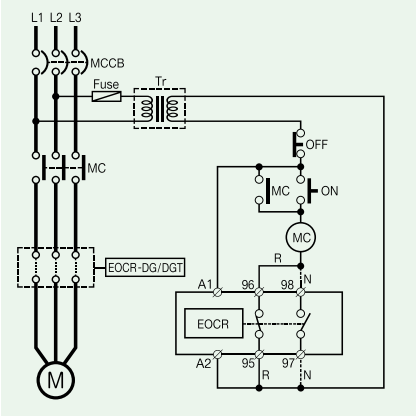

※"N"(Fail safe)Type converts 95┤├96 to open and 97┤├98 to close when operating power is supplied to A1 and A2 (or L1 and L2).

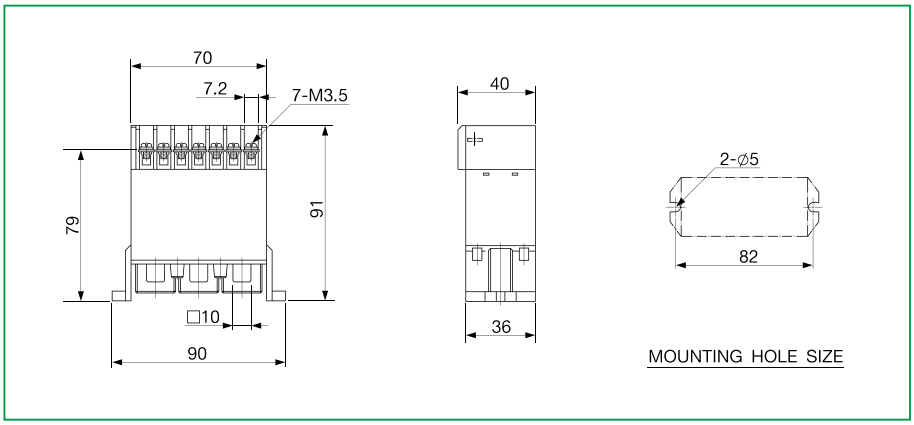

EOCR-DG (Hole Type)

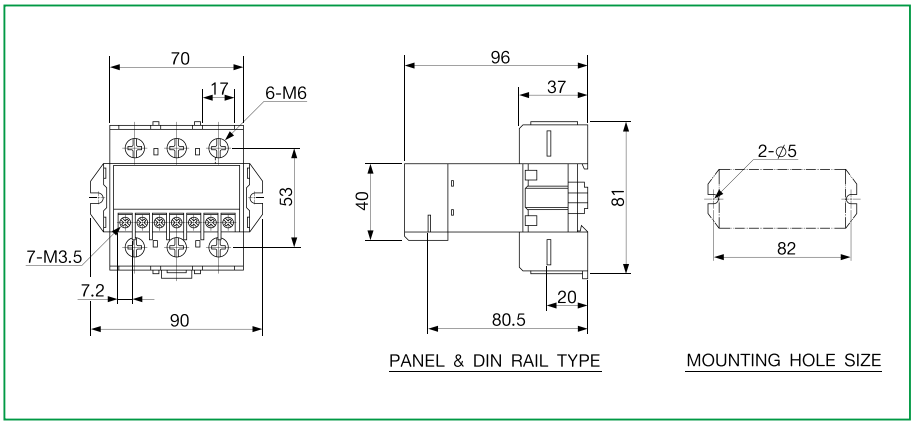

EOCR-DGT (Terminal Type)

How to Order

Reference		Current Range [A]	CT	Output Contact	Operating Power Supply		Notes
					Voltage [V]	Frequency [Hz]	
EOCRDG	-05RB	5	-	R	AC/DC24V	-	For Panel Mounting
	-H1RB	5	100:05:00	R	AC/DC24V	-	For Panel Mounting
	-HHRB	5	150:05:00	R	AC/DC24V	-	For Panel Mounting
	-H2RB	5	200:05:00	R	AC/DC24V	-	For Panel Mounting
	-H3RB	5	300:05:00	R	AC/DC24V	-	For Panel Mounting
	-H4RB	5	400:05:00	R	AC/DC24V	-	For Panel Mounting
	-05NB	5	-	N	AC/DC24V	-	For Panel Mounting
	-H1NB	5	100:05:00	N	AC/DC24V	-	For Panel Mounting
	-HHNB	5	150:05:00	N	AC/DC24V	-	For Panel Mounting
	-H2NB	5	200:05:00	N	AC/DC24V	-	For Panel Mounting
	-H3NB	5	300:05:00	N	AC/DC24V	-	For Panel Mounting
	-H4NB	5	400:05:00	N	AC/DC24V	-	For Panel Mounting
	-05RF7	5	-	R	AC 110V	50/60	For Panel Mounting
	-H1RF7	5	100:05:00	R	AC 110V	50/60	For Panel Mounting
	-HHRF7	5	150:05:00	R	AC 110V	50/60	For Panel Mounting
	-H2RF7	5	200:05:00	R	AC 110V	50/60	For Panel Mounting
	-H3RF7	5	300:05:00	R	AC 110V	50/60	For Panel Mounting
	-H4RF7	5	400:05:00	R	AC 110V	50/60	For Panel Mounting
	-05NF7	5	-	N	AC 110V	50/60	For Panel Mounting
	-H1NF7	5	100:05:00	N	AC 110V	50/60	For Panel Mounting
	-HHNF7	5	150:05:00	N	AC 110V	50/60	For Panel Mounting
	-H2NF7	5	200:05:00	N	AC 110V	50/60	For Panel Mounting
	-H3NF7	5	300:05:00	N	AC 110V	50/60	For Panel Mounting
	-H4NF7	5	400:05:00	N	AC 110V	50/60	For Panel Mounting
	-05RM7	5	-	R	AC 220V	50/60	For Panel Mounting
	-H1RM7	5	100:05:00	R	AC 220V	50/60	For Panel Mounting
	-HHRM7	5	150:05:00	R	AC 220V	50/60	For Panel Mounting
	-H2RM7	5	200:05:00	R	AC 220V	50/60	For Panel Mounting
	-H3RM7	5	300:05:00	R	AC 220V	50/60	For Panel Mounting
	-H4RM7	5	400:05:00	R	AC 220V	50/60	For Panel Mounting
	-05NM7	5	-	N	AC 220V	50/60	For Panel Mounting
	-H1NM7	5	100:05:00	N	AC 220V	50/60	For Panel Mounting
	-HHNM7	5	150:05:00	N	AC 220V	50/60	For Panel Mounting
	-H2NM7	5	200:05:00	N	AC 220V	50/60	For Panel Mounting
	-H3NM7	5	300:05:00	N	AC 220V	50/60	For Panel Mounting
	-H4NM7	5	400:05:00	N	AC 220V	50/60	For Panel Mounting
	-30RB	30	-	R	AC/DC24V	-	For Panel Mounting
	-30NB	30	-	N	AC/DC24V	-	For Panel Mounting
	-30RF7	30	-	R	AC 110V	50/60	For Panel Mounting
	-30NF7	30	-	N	AC 110V	50/60	For Panel Mounting
	-30RM7	30	-	R	AC 220V	50/60	For Panel Mounting
	-30NM7	30	-	N	AC 220V	50/60	For Panel Mounting
EOCRDGT	-05RB	5	-	R	AC/DC24V	-	For both Panel/DIN Rail
	-05NB	5	-	N	AC/DC24V	-	For both Panel/DIN Rail
	-05RF7	5	-	R	AC 110V	50/60	For both Panel/DIN Rail
	-05NF7	5	-	N	AC 110V	50/60	For both Panel/DIN Rail
	-05RM7	5	-	R	AC 220V	50/60	For both Panel/DIN Rail
	-05NM7	5	-	N	AC 220V	50/60	For both Panel/DIN Rail
	-30RB	30	-	R	AC/DC24V	-	For both Panel/DIN Rail
	-30NB	30	-	N	AC/DC24V	-	For both Panel/DIN Rail
	-30RF7	30	-	R	AC 110V	50/60	For both Panel/DIN Rail
	-30NF7	30	-	N	AC 110V	50/60	For both Panel/DIN Rail
	-30RM7	30	-	R	AC 220V	50/60	For both Panel/DIN Rail
	-30NM7	30	-	N	AC 220V	50/60	For both Panel/DIN Rail

• Accessory

Accessory1		
Model	Reference	CT Current Transformer Ratio
3CT	3CT-H1-100-C	100:5
	3CT-HH-150-C	150:5
	3CT-H2-200-C	200:5
	3CT-H3-300-C	300:5
	3CT-H4-400-C	400:5

Ordering Example

e.g., To order an EOCR-DG:

E O C R D G – 0 5 R F 7

❶ ❷ ❸

❶	Current Range	5	0.5~6A
		30	3~30A
		H1	100:5 3CT Combination Type
		HH	150:5 3CT Combination Type
		H2	200:5 3CT Combination Type
		H3	300:5 3CT Combination Type
		H4	400:5 3CT Combination Type
❷	Output Contact State	R	Normally De-energized
		N	Normally Energized
❸	Operating Power Supply/Frequency	B	AC/DC24V Compatible
		F7	AC110V, 50/60Hz
		M7	AC220V, 50/60Hz

※ *For a CT combination type, please write an accessory code from the CT Order Codes separately.*

e.g., To order an EOCR-DGT:

E O C R D G T – 0 5 R F 7

❶ ❷ ❸

❶	Current Setting	5	0.5~6A
		30	3~30A
❷	Output Contact State	R	Normally De-energized
		N	Normally Energized
❸	Operating Power Supply/Frequency	B	AC/DC24V Compatible
		F7	AC110V, 50/60Hz
		M7	AC220V, 50/60Hz

e.g., To order a 3CT:

3 C T – H 1 – 1 0 0 – C

❶

❶	CT Current Transformer Ratio	H1	100	Rectangular 3CT 100:5
		HH	150	Rectangular 3CT 150:5
		H2	200	Rectangular 3CT 200:5
		H3	300	Rectangular 3CT 300:5
		H4	400	Rectangular 3CT 400:5

EOCR-DZ [T]

Multi-functional relay that has an earth fault protection function with the zero phase current detection method

- Built-in MCU (Microprocessor Control Unit)
- Over current/phase loss/reverse phase/unbalance/locked rotor/earth fault protection
- Earth fault protection with zero phase current detection method
- Wide current setting range
- Automatic calculation of start delay time
- Operation and trip cause display
- Definite operation characteristics
- Manual (instant)/electrical (remote) reset
- Strong environmental resistance
- Super energy-saver
- No-voltage release/Fail-safe operation→ N type
- DZ: Hole type, DZT: Terminal type

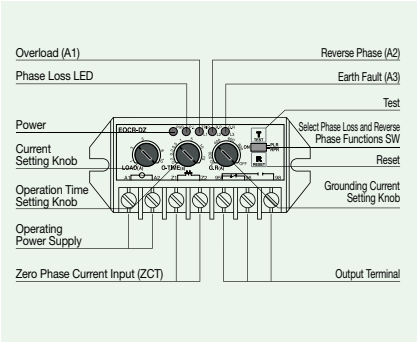

EOCR-DZ

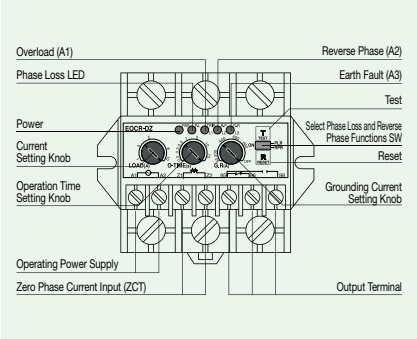

EOCR-DZT

Protection Function

Protected Items	Operation Time
Over Current	O-TIME
Phase Loss	Within 4 sec
Reverse Phase	0.1 sec
Unbalance	8 sec
Locked Rotor	After D-TIME when I > Is × 3
Earth Fault	0.5 sec

Trip cause check - 5LED

		PWR	PL	OL	RP	GR
Power supply (during operation)		●	○	○	○	○
Over Current		○	○	●	○	○
Earth Fault		○	○	○	○	●
Reverse Phase		○	○	○	●	○
Phase Loss	L1 Phase Loss	○	●	●	○	○
	L2 Phase Loss	○	●	○	●	○
	L3 Phase Loss	○	●	○	○	●
Unbalance		○	● - ○	○	○	●
Locked Rotor		○	○	○ - ●	○	○

※ LED Display: ON(●), OFF(○), ON-OFF(● - ○)

Specifications

Model			EOCR-DZ (T)	
Current Setting		Type	Current Setting Range	Earth Fault Current Setting Range
		5	0.5~6A	0.05~0.8A
		10	1.0~10A	0.05~0.8A
		60	5.0~60A	0.05~0.8A
		60~600	Combine 05Type and an external CT for use	0.05~0.8A
Time Setting	Start Delay	D-TIME	Automatic Calculation (up to 60 sec)	
	Operation Time	O-TIME	0.2~15 sec	
Reset			Manual (instant)/electrical (remote) reset	
Operation Time Characteristic			Definite	
Operation Display			5LED	
Error Tolerance		Current	±10%	
		Time	±10%	
Operating Power Supply	Voltage	110	AC85~150V, 50/60Hz	Other AC/DC 24V
		220	AC180~260V, 50/60Hz	
Auxiliary Contact	Capacity	1-SPDT	AC250V/3A resistive load	
	State	R	Normally de-energized (regardless of power supply: 95-96 Close, 95-98 Open)	
		N	Normally energized (after power is supplied: 95-96 Open, 95-98 Close)	
Insulation	Resistance	Between case and circuit	10MΩ or higher with a DC500V Megger	
	Withstanding Voltage	Between case and circuit	2.0kV power frequency for 1 min	
		Between contacts	1.0kV power frequency for 1 min	
		Between circuits	2.0kV power frequency for 1 min	
Usage Environment	Temperature	For operation	-20~60℃	
		For storage	-30~80℃	
	Humidity		30~85% RH with no dew condensation	
Attachment		EOCR-DZ	Panel	
		EOCR-DZT	35mm DIN Rail/Panel	

EOCR-DZ[T]

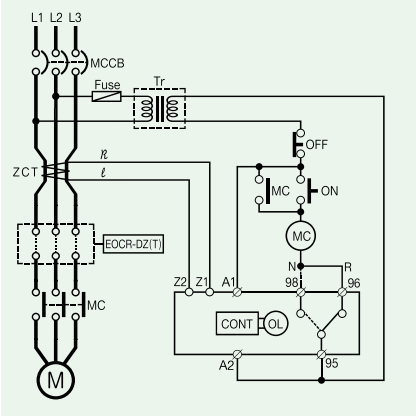

※"N"(Fail safe)Type converts 95┤├96 to open and 95┤├98 to close when operating power is supplied to A1 and A2 (or L1 and L2).
※For ZCT terminal, it must be used without ground connection.

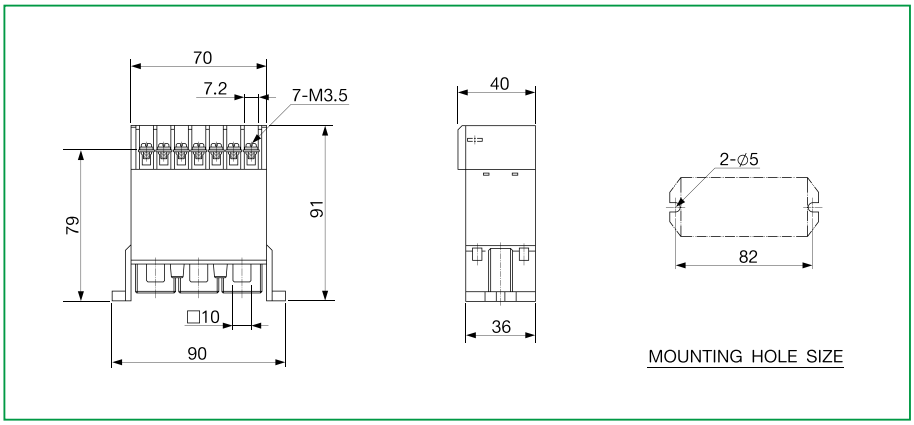

EOCR-DZ (Hole Type)

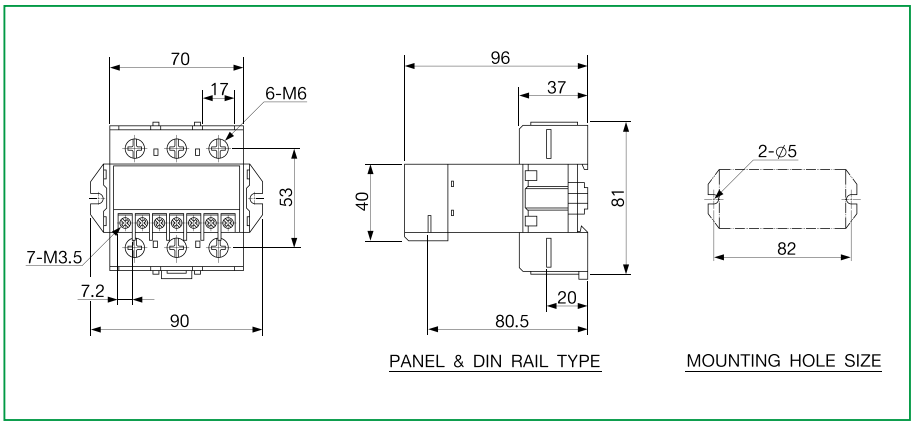

EOCR-DZT (Terminal Type)

How to Order

Reference		Current Range [A]	CT	Output Contact	Operating Power Supply		Installation Method
					Voltage [V]	Frequency [Hz]	
EOCRDZ	-05RB	5	-	R	AC/DC24V	-	Panel Mounting
	-H1RB	5	100:5	R	AC/DC24V	-	Panel Mounting
	-HHRB	5	150:5	R	AC/DC24V	-	Panel Mounting
	-H2RB	5	200:5	R	AC/DC24V	-	Panel Mounting
	-H3RB	5	300:5	R	AC/DC24V	-	Panel Mounting
	-H4RB	5	400:5	R	AC/DC24V	-	Panel Mounting
	-05NB	5	-	N	AC/DC24V	-	Panel Mounting
	-H1NB	5	100:5	N	AC/DC24V	-	Panel Mounting
	-HHNB	5	150:5	N	AC/DC24V	-	Panel Mounting
	-H2NB	5	200:5	N	AC/DC24V	-	Panel Mounting
	-H3NB	5	300:5	N	AC/DC24V	-	Panel Mounting
	-H4NB	5	400:5	N	AC/DC24V	-	Panel Mounting
	-05RF7	5	-	R	AC 110V	50/60	Panel Mounting
	-H1RF7	5	100:5	R	AC 110V	50/60	Panel Mounting
	-HHRF7	5	150:5	R	AC 110V	50/60	Panel Mounting
	-H2RF7	5	200:5	R	AC 110V	50/60	Panel Mounting
	-H3RF7	5	300:5	R	AC 110V	50/60	Panel Mounting
	-H4RF7	5	400:5	R	AC 110V	50/60	Panel Mounting
	-05NF7	5	-	N	AC 110V	50/60	Panel Mounting
	-H1NF7	5	100:5	N	AC 110V	50/60	Panel Mounting
	-HHNF7	5	150:5	N	AC 110V	50/60	Panel Mounting
	-H2NF7	5	200:5	N	AC 110V	50/60	Panel Mounting
	-H3NF7	5	300:5	N	AC 110V	50/60	Panel Mounting
	-H4NF7	5	400:5	N	AC 110V	50/60	Panel Mounting
	-05RM7	5	-	R	AC 220V	50/60	Panel Mounting
	-H1RM7	5	100:5	R	AC 220V	50/60	Panel Mounting
	-HHRM7	5	150:5	R	AC 220V	50/60	Panel Mounting
	-H2RM7	5	200:5	R	AC 220V	50/60	Panel Mounting
	-H3RM7	5	300:5	R	AC 220V	50/60	Panel Mounting
	-H4RM7	5	400:5	R	AC 220V	50/60	Panel Mounting
	-05NM7	5	-	N	AC 220V	50/60	Panel Mounting
	-H1NM7	5	100:5	N	AC 220V	50/60	Panel Mounting
	-HHNM7	5	150:5	N	AC 220V	50/60	Panel Mounting
	-H2NM7	5	200:5	N	AC 220V	50/60	Panel Mounting
	-H3NM7	5	300:5	N	AC 220V	50/60	Panel Mounting
	-H4NM7	5	400:5	N	AC 220V	50/60	Panel Mounting
	-10RB	10	-	R	AC/DC24V	-	Panel Mounting
	-10NB	10	-	N	AC/DC24V	-	Panel Mounting
	-10RF7	10	-	R	AC 110V	50/60	Panel Mounting
	-10NF7	10	-	N	AC 110V	50/60	Panel Mounting
	-10RM7	10	-	R	AC 220V	50/60	Panel Mounting
	-10NM7	10	-	N	AC 220V	50/60	Panel Mounting
	-60RB	60	-	R	AC/DC24V	-	Panel Mounting
	-60NB	60	-	N	AC/DC24V	-	Panel Mounting
	-60RF7	60	-	R	AC 110V	50/60	Panel Mounting
	-60NF7	60	-	N	AC 110V	50/60	Panel Mounting
	-60RM7	60	-	R	AC 220V	50/60	Panel Mounting
	-60NM7	60	-	N	AC 220V	50/60	Panel Mounting
EOCRDZT	-05RB	5	-	R	AC/DC24V	-	Panel/DIN Rail
	-05NB	5	-	N	AC/DC24V	-	Panel/DIN Rail
	-05RF7	5	-	R	AC 110V	50/60	Panel/DIN Rail
	-05NF7	5	-	N	AC 110V	50/60	Panel/DIN Rail
	-05RM7	5	-	R	AC 220V	50/60	Panel/DIN Rail
	-05NM7	5	-	N	AC 220V	50/60	Panel/DIN Rail
	-10RB	10	-	R	AC/DC24V	-	Panel/DIN Rail
	-10NB	10	-	N	AC/DC24V	-	Panel/DIN Rail
	-10RF7	10	-	R	AC 110V	50/60	Panel/DIN Rail
	-10NF7	10	-	N	AC 110V	50/60	Panel/DIN Rail
	-10RM7	10	-	R	AC 220V	50/60	Panel/DIN Rail
	-10NM7	10	-	N	AC 220V	50/60	Panel/DIN Rail
	-60RB	60	-	R	AC/DC24V	-	Panel/DIN Rail
	-60NB	60	-	N	AC/DC24V	-	Panel/DIN Rail
	-60RF7	60	-	R	AC 110V	50/60	Panel/DIN Rail
	-60NF7	60	-	N	AC 110V	50/60	Panel/DIN Rail
	-60RM7	60	-	R	AC 220V	50/60	Panel/DIN Rail
	-60NM7	60	-	N	AC 220V	50/60	Panel/DIN Rail

• Accessory

Accessory1		
Model	Reference	CT Current Transformer Ratio
3CT	3CT-H1-100-C	100:5
	3CT-HH-150-C	150:5
	3CT-H2-200-C	200:5
	3CT-H3-300-C	300:5
	3CT-H4-400-C	400:5

Accessory2		
Model	Reference	Hole Diameter (m/m)
ZCT	ZCT-035	35
	ZCT-080	80
	ZCT-120	120

Ordering Example

e.g., To order an EOCR-DZ:

E O C R D Z – 0 5 R F 7

❶ ❷ ❸

❶	Current Range	5	0.5~6A
		10	1~10A
		60	5~60A
		H1	100:5 3CT Combination Type
		HH	150:5 3CT Combination Type
		H2	200:5 3CT Combination Type
		H3	300:5 3CT Combination Type
		H4	400:5 3CT Combination Type
❷	Output Contact State	R	Normally De-energized
		N	Normally Energized
❸	Operating Power Supply/Frequency	B	AC/DC24V Compatible
		F7	AC110V, 50/60Hz
		M7	AC220V, 50/60Hz

※ *For a CT combination type, please write an accessory code from the CT Order Codes separately.*

e.g., To order an EOCR-DZT:

E O C R D Z T – 0 5 R F 7

❶ ❷ ❸

❶	Current Range	05	0.5~6A
		10	1~10A
		60	5~60A
❷	Output Contact State	R	Normally De-energized
		N	Normally Energized
❸	Operating Power Supply/Frequency	B	AC/DC24V Compatible
		F7	AC110V, 50/60Hz
		M7	AC220V, 50/60Hz

e.g., To order a 3CT:

3 C T – H 1 – 1 0 0 – C

❶

❶	CT Current Transformer Ratio	H1	100	Rectangular 3CT 100:5
		HH	150	Rectangular 3CT 150:5
		H2	200	Rectangular 3CT 200:5
		H3	300	Rectangular 3CT 300:5
		H4	400	Rectangular 3CT 400:5

e.g., To order a ZCT:

Z C T – 0 3 5

❶

❶	Hole Diameter	35	35mm
		80	80mm
		120	120mm

EOCR-4E

Multi-purpose current relay with short-circuit, earth fault functions

- Micro compact size
- Over current/phase loss/short-circuit/earth fault protection
- Inverse operation characteristics
- Actual current check/Trip cause display (5 LEDs)

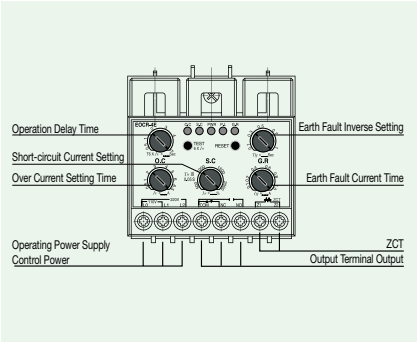

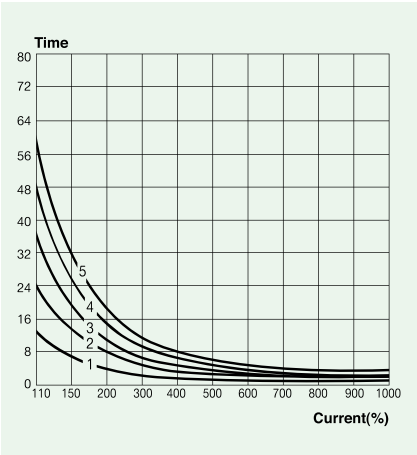

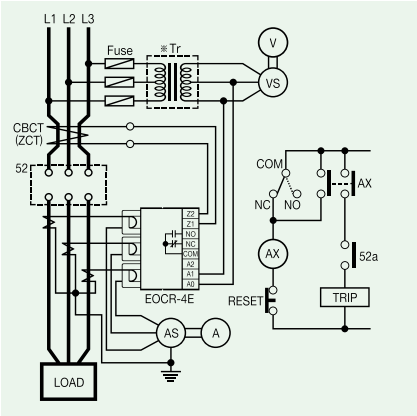

※For ZCT terminal, it must be used without ground connection.

Protection Function

Protected Items	Operation Time
Over Current	O-TIME
Phase Loss	4 sec (Definite)
Short-circuit	0.05 sec (Instantaneous)
Earth Fault (Grounding)	0.3~1.0 sec (Zero phase current detection method)

Specifications

Current Setting		Type	Setting Range	
		Over Current	1~6A	
		Short-circuit current	500~2000%	
		Earth Fault Current	0.1~1A	
Operation Time Setting		Over Current	1~5	Inverse
		Short-circuit	0.05 sec	Instantaneous
		Earth Fault	0.3~1 sec	Definite
Reset			Manual (instant)/electrical (remote) reset	
Operation Display			LED LAMP (5 LEDs)	
Operating Power Supply		Voltage	AC110(A0, A1)/220(A0, A2)V	
		Frequency	50/60Hz	
Auxiliary Contact		Capacity	1-SPDT (1C), AC250V/5A resistive load	
		State	COM ┤├ No (closed after operating voltage is supplied)	
			COM ┤├ NC (opened after operating voltage is supplied)	
Error Tolerance	Current		±10%	
	Time		±10%	
Insulation	Resistance	Between case and circuit	10MΩ or higher with a DC500V Megger	
	Withstanding Voltage	Between case and circuit	2.0kV power frequency for 1 min	
		Between contacts	1.0kV power frequency for 1 min	
		Between circuits	2.0kV power frequency for 1 min	
Usage Environment	Temperature	For operation	-20~60℃	
		For storage	-30~80℃	
	Humidity		30~85% RH with no dew condensation	
Power Consumption			Below 2W	
Attachment			35mm DIN Rail/Panel	

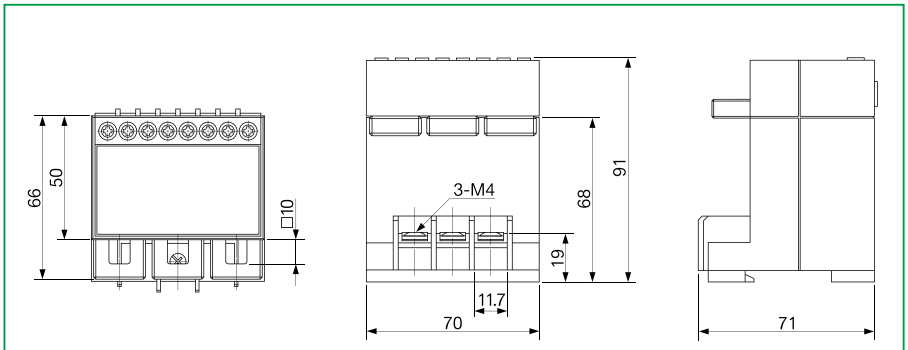

DIN RAIL TYPE

EOCR-4E

How to Order

Reference		Current Range [A]	Output Contact	Operating Power Supply		Mounting
				Voltage [V]	Frequency [Hz]	
EOCR4E	-05NY7	5	N	AC 110/220V	50/60	For both Panel/DIN Rail
	KI05NY7	5	N	AC 110/220V	50/60	KERI

• Accessory

Accessory1		
Model	Reference	Hole Diameter (m/m)
ZCT	ZCT-035	35
	ZCT-080	80
	ZCT-120	120

Ordering Example

e.g., To order an EOCR-4E:

E O C R 4 E – 0 5 N Y 7

❶ ❷ ❸ ❹

❶	**Certification**	**-**	No Official Test Required
		KI	KERI Test
❷	**Current Range**	**5**	1~6A
❸	**Output Contact State**	**N**	Normally Energized
❹	**Operating Power Supply/ Frequency**	**Y7**	AC110/220V, 50/60Hz

e.g., To order a ZCT

Z C T – 0 3 5

❶

❶	**Hole Diameter**	**35**	35mm
		80	80mm
		120	120mm

2. Current Protection Relay for Direct Current (DC)

- **DCL**
  (electronic direct current (DC) over current relay)
- **DUCR**
  (electronic direct current (DC) under current relay)
- **DOCR-S/H**
  (current system type digital overload, light-load, motor protection relay)
- **DUCR-S/H**
  (current system type digital light-load, motor protection relay)

DCL/DUCR

Electronic direct current (DC) over current relay/electronic direct current (DC) under current relay

- Load Protection for Direct Current Motor and Direct Current Devices
- An easy-to-operate direct over current/under current relay, for which the switch is operated by the auxiliary contact of the built-in auxiliary relay based on the values set by the operation time setting knob and current setting knob when the received micro-voltage that appears on both ends of the operating power supply and shunt is amplified and discriminated in the control section.
- Can apply from 1A or less to several hundreds of A loads depending on the type of the shunt
- Direct current ammeter can be used instead of the shunt.
  (inner shunt is built in the direct current ammeter to retain 50mV at max. current.)

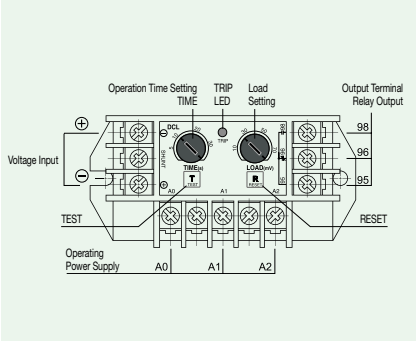

DCL

Protection Function

Protected Items	Operation Time	
	DCL	DUCR
Over Current	O-TIME	-
Under Current	-	O-TIME

Specifications

Current Setting		Type	Setting Range (DCL)	Setting Range (DUCR)
			Direct Current Over Current Relay	Direct Current Under Current Relay
		70	10~70mVDC (Shunt secondary voltage)	
Time Setting	Operation Time	O-TIME	0.2~30 sec	
Reset		M	Manual (instant)/electrical reset	
		A	Auto (instant) reset (produced on demand)	
Operation Display			LED	
Operating Power Supply	Voltage	220	AC 110/220V	Other voltage produced on demand
		440	AC 380/440V	
	Frequency		50/60Hz	
Auxiliary Contact		R	Normally de-energized	
		N	Normally energized	
Attachment			Panel	

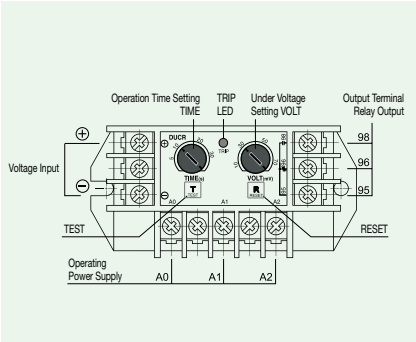

DUCR

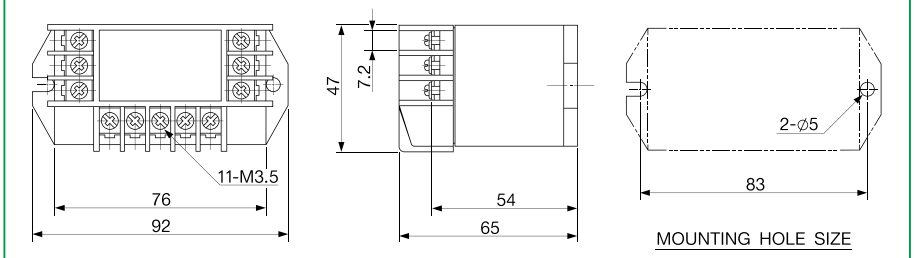

DCL/DUCR

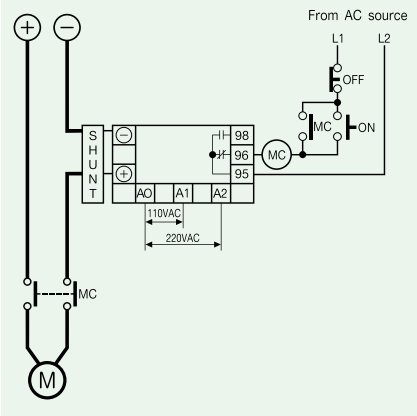

※ *"N"(Fail safe)Type converts 95 96 to open and 95 98 to close when operating power is supplied to A1 and A2 (or L1 and L2).*

How to Order

Reference		Input Voltage[mV]	Output Contact	Operating Power Supply		Reset	Notes
				Voltage [V]	Frequency [Hz]		
DCL	-70RY7R	70	R	AC 110/220V	50/60	Auto	Panel Mounted
	-70RV7R	70	R	AC 380/440V	50/60	Auto	Panel Mounted
	-70NY7R	70	N	AC 110/220V	50/60	Auto	Panel Mounted
	-70NV7R	70	N	AC 380/440V	50/60	Auto	Panel Mounted
	-70RY7M	70	R	AC 110/220V	50/60	Manual	Panel Mounted
	-70RV7M	70	R	AC 380/440V	50/60	Manual	Panel Mounted
	-70NY7M	70	N	AC 110/220V	50/60	Manual	Panel Mounted
	-70NV7M	70	N	AC 380/440V	50/60	Manual	Panel Mounted
DUCR	-70RY7R	70	R	AC 110/220V	50/60	Auto	Panel Mounted
	-70RV7R	70	R	AC 380/440V	50/60	Auto	Panel Mounted
	-70NY7R	70	N	AC 110/220V	50/60	Auto	Panel Mounted
	-70NV7R	70	N	AC 380/440V	50/60	Auto	Panel Mounted
	-70RY7M	70	R	AC 110/220V	50/60	Manual	Panel Mounted
	-70RV7M	70	R	AC 380/440V	50/60	Manual	Panel Mounted
	-70NY7M	70	N	AC 110/220V	50/60	Manual	Panel Mounted
	-70NV7M	70	N	AC 380/440V	50/60	Manual	Panel Mounted

Ordering Example

e.g., To order a DCL:

D C L – 7 0 R Y 7 M

❶ ❷ ❸ ❹

❶	**Input Voltage**	**70**	70mV
❷	**Output Contact State**	**R**	Normally De-energized
		N	Normally Energized
❸	**Operating Power Supply/ Frequency**	**Y7**	AC110/220V, 50/60Hz
		V7	AC380/440V, 50/60Hz
❹	**Reset**	**M**	Manual
		R	Auto

e.g., To order a DUCR:

D U C R – 7 0 R Y 7 M

❶ ❷ ❸ ❹

❶	**Input Voltage**	**70**	70mV
❷	**Output Contact State**	**R**	Normally De-energized
		N	Normally Energized
❸	**Operating Power Supply/ Frequency**	**Y7**	AC110/220V, 50/60Hz
		V7	AC380/440V, 50/60Hz
❹	**Reset**	**M**	Manual
		R	Auto

DOCR-S/H (Digital)/DUCR-S/H (Digital)

Current system type digital overload, light-load, motor protection relay

- Built-in MCU (Microprocessor Control Unit)
- Real-time processing/higher precision
- DC motor/DC device protection
- Current detection using a shunt
  (→ DOCR-S, DUCR-S)/Current detection using a hall sensor (→ DOCR-H, DUCR-H)
- Display of primary active current after the shunt/hall sensor rating is set (display window)
- Digital setting/operating current DATA Digital display (display window)
- Auto reset/reset delay time setting
- Each set value check/TEST function
- No-voltage release/Fail-safe operation setting (→ NVR setting)
- Secondary shunt output: Voltage DC 50mV output
- Hall Sensor input DC 12V (VCC-GND), output DC 4V (OUT-GND)
- Stores the last 3 trip causes

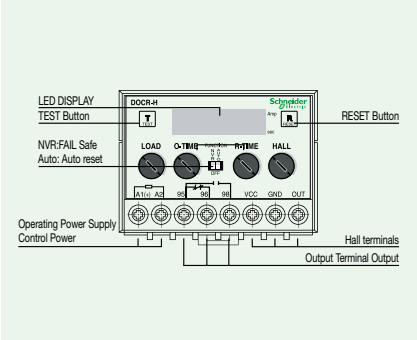

DOCR-H / DUCR-H

Protection Function

Protected Items	Operation Time
Over Current (DOCR-S/H)	O-TIME
Under Current (DUCR-S/H)	O-TIME

Protection Function and Display

Protected Items	LED Display	Trip Cause
Over Current	o 110	Operates after detecting over current.
Under Current	u 70	Operates after detecting under current.

DOCR-S / DUCR-S

Specifications

Current Setting			Setting Range (DOCR-S/ DUCR-S)	Setting Range (DOCR-H/ DUCR-H)	
			0.1~240A	5~360A	
Operation Time			0.5~25 sec	0.5~25 sec	
Reset Time			0.5~25 sec	0.5~25 sec	
SHUNT rating			1a 0.1~1.3A	-	
			2A 0.2~2.6A	-	
			5A 0.5~6.6A	-	
			10A 1~13.2A	-	
			20A 2~26.4A	-	
			50A 5~66.2A	-	
			100A 10~132A	-	
			200A 20~264A	-	
HALL SENSOR rating			-	50A	5~64A
			-	100A	10~128A
			-	200A	20~256A
			-	300A	30~385A
			-	400A	40~513A
Operating Power Supply	Voltage	24	AC/DC24V	AC/DC24V	
		220	AC/DC85~250V	AC/DC85~250V	
	Frequency		50/60Hz	50/60Hz	
Reset			Manual/electrical/auto reset	Manual/electrical/auto reset	
Output contact		Format	1-SPDT (1c)	1-SPDT (1c)	
		Rating	AC250V/3A resistive load	AC250V/3A resistive load	
Operation Display			FND	FND	
Attachment			35mm DIN Rail/Panel	35mm DIN Rail/Panel	

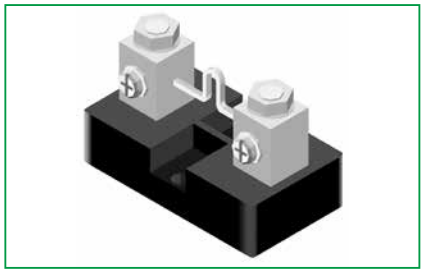

Shunt

Hall Sensor

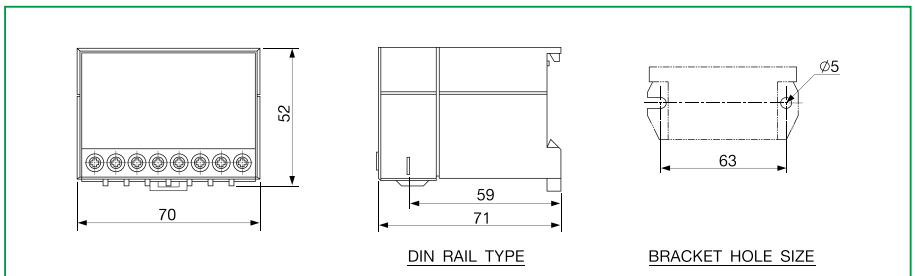

DOCR-S/H(Digital) / DUCR-S/H(Digital)

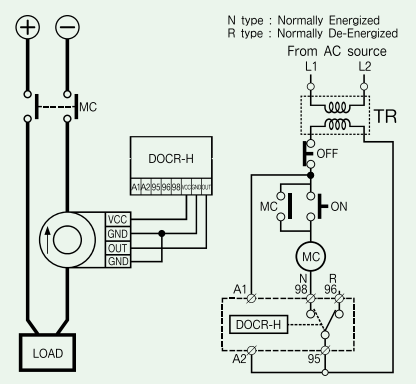

※Wiring for DOCR-H's Fail Safe(N Type): 95-98 is normally energized (Close) when applied.

※FS→OFF

Contact	Operating Power Supply OFF	Operating Power Supply ON	Trip
95-96	Close	Close	Open
95-98	Open	Open	Close

※FS→ON

Contact	Operating Power Supply OFF	Operating Power Supply ON	Trip
95-96	Close	Open	Close
95-98	Open	Close	Open

DOCR-H

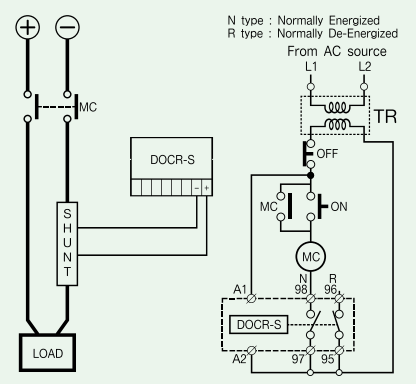

※The DC input terminal of DOCR-S is in fact non-polar, so switching +, - when connecting does not cause any problems.
※Wiring for DOCR-S's Fail Safe(N Type): 97-98 is normally energized (Close) when applied.

※FS→OFF

Contact	Operating Power Supply OFF	Operating Power Supply ON	Trip
95-96	Close	Close	Open
95-98	Open	Open	Close

※FS→ON

Contact	Operating Power Supply OFF	Operating Power Supply ON	Trip
95-96	Close	Open	Close
95-98	Open	Close	Open

DOCR-S

Setting Method

1. Mode	DN ▼ / ▲ UP	Press the Up/Down mode switches to find the Mode to set.
2.Set	SET Store	After pressing the Set/Store button once, the setting must be performed while the mode and value are flickering.
3.Adjust	DN ▼ / ▲ UP	Press the Up/Down mode switches to select the required value or characters.
4.Store	SET Store	When the SET/Store button is pressed once, the selected value or characters will be stored and the flickering will stop.
5.Reset	RESET	Once the setting is finished, press the Reset button or leave it untouched for 30 sec to complete the setting.

※ Trip Cause Check
Press the Up/Down buttons to enter "Trip" mode, and press the Set/Store button to display the last trip cause. Each time you press Up/Down once, you can see the next trip cause, up to the last 3.

Setting Sequence

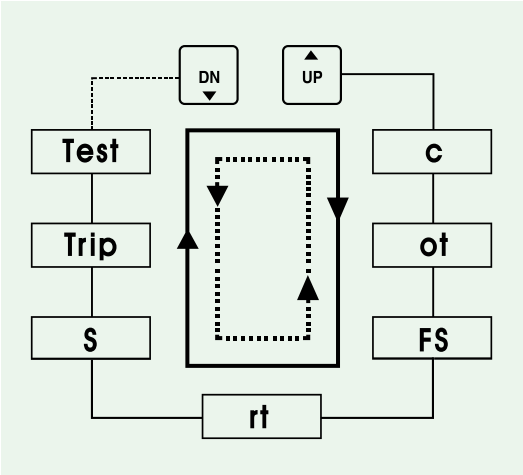

Functions for Each Mode and Setting Method

Sequence	Items	Setting Range (display)	FND Display Window	Notes
1	Over Current Setting	10A~120 (100A reference)	c 100°	Over Current 100A Setting
2	Over Current Operation Time Setting	0.5~25 sec	ot 5.	Definite Operation
3	Fail Safe (NVR) Setting	ON (FSon), OFF (FS--)	FSon	Cannot be set while operating.
4	Reset Method	Auto Reset: 05~25 sec OFF (rt--)	rt--.	Auto resets after the set time when tripped
5	SHUNT Rating	1A, 2A, 5A, 10A, 20A, 50A, 100A, 200A	S 100	Cannot be set while operating.
6	HALL Rating	50A, 100A, 200A, 300A, 400A	H 100	Cannot be set while operating.
7	Trip Cause Display	From the 1st to the 3rd	tr 1P	The most recent trip cause will be displayed first. Up to the 3 last trip causes can be checked.
8	TEST Function	End is displayed after the ot value is counted down after 3 sec.	TEST → 3 sec. 10. → 0-Time End Cannot be tested while operating.	

DOCR-S/H (Digital)/DUCR-S/H (Digital)

How to Order

Reference		Input Sensor	Operating Power Supply		Notes
			Voltage [V]	Frequency [Hz]	
DOCRD	-HALLB	HALL	AC/DC24V		DIN Rail Compatible
	-HALLZ7	HALL	AC/DC85~250V	50/60	DIN Rail Compatible
	-SHUNTB	SHUNT	AC/DC24V		DIN Rail Compatible
	-SHUNTZ7	SHUNT	AC/DC85~250V	50/60	DIN Rail Compatible
DUCRD	-HALLB	HALL	AC/DC24V		DIN Rail Compatible
	-HALLZ7	HALL	AC/DC85~250V	50/60	DIN Rail Compatible
	-SHUNTB	SHUNT	AC/DC24V		DIN Rail Compatible
	-SHUNTZ7	SHUNT	AC/DC85~250V	50/60	DIN Rail Compatible
	-Hall Sensor				

Ordering Example

e.g., To order a DOCR:

D O C R D – H A L L B

❶ ❷

❶	**Sensor**	**HALL**	
		SHUNT	
❷	**Operating Power Supply/Frequency**	**B**	AC/DC24V Compatible
		Z7	AC85~250V, 50/60Hz, DC compatible

※The D at the end of the Model Name indicates Digital Type.

e.g., To order a DUCR:

D U C R D – H A L L B

❶ ❷

❶	**Sensor**	**HALL**	
		SHUNT	
❷	**Operating Power Supply/Frequency**	**B**	AC/DC24V Compatible
		Z7	AC85~250V, 50/60Hz, DC compatible

※The D at the end of the Model Name indicates Digital Type.

Static AC Undervoltage Relay

3. Voltage Protection Relay for Alternating Current (AC)

● EOVR
(Static AC Over Voltage Relay)

● EUVR
(Static AC Under Voltage (Low Voltage) Relay)

● EVR-PD
(Digital Voltage Relay)

● EVR-FD
(Digital Voltage Relay)

EOVR

Static AC Undervoltage Relay

- Micro-compact design
- Over Voltage protection
- Single-phase
- A wide range of voltage settings are available for a continuously variable setting
- LED for operating voltage check and operation status display
- Stable operation even with intermittent voltage fluctuation thanks to the signal accumulation prevention circuit
- Strong environmental resistance
- Only R TYPE available

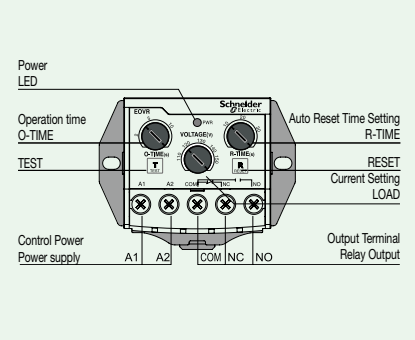

Protection Function

List	Operation Time
Over Voltage	O-TIME

Specifications

Voltage Settings		Type	Settings range
		110	AC110V - 150V
		220	AC220V - 300V
		380	AC380V - 460V
Time Settings	Operation Time	O-TIME	0.2 - 10 seconds
	Reset Time	R-TIME	0.5 - 30 seconds
Reset			Manual/Auto reset
Operation Status Display			LED
Tolerance		Voltage	±5%
		Time	±5%
Insulation	Voltage	Between case and circuit	10㏁ or over with a DC500V Megger
	Withstanding Voltage	Between case and circuit	2.0kV power frequency for 1 minute
		Between contacts	1.0kV power frequency for 1 minute
		Between circuits	2.0kV power frequency for 1 minute
Auxiliary Contact		1-SPDT (1C)	AC250V/3A Resistive load
Auxiliary Contact Condition		R TYPE	Normally de-energized (COM-NC : Close)
Environment	Temperature	Storage	-30 - 80℃
		Operation	-20 - 60℃
	Humidity		30% - 85% RH at non-condensing state
Installation			35mm DIN-Rail/Panel

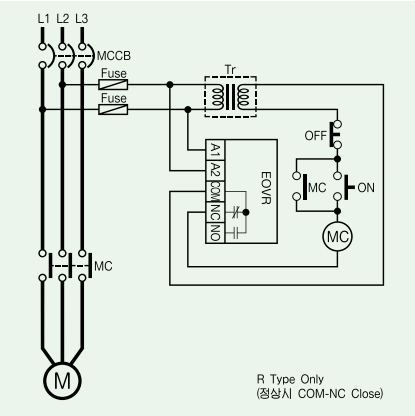

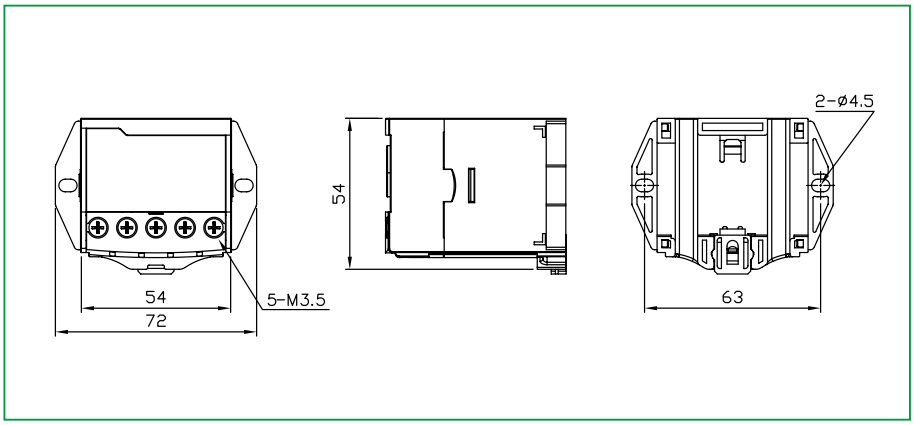

EOVR

How to Order

Reference		Input Voltage [V]	Output Contact	Frequency
EOVR	-110R7	AC110V	R	50/60
	-220R7	AC220V	R	50/60
	-380R7	AC380V	R	50/60

Ordering Example

To order an EOVR:

E O V R – 1 1 0 R 7

❶ ❷ ❸

❶	**Input Voltage**	**110**	AC110V - 150V
		220	AC220V - 300V
		380	AC380V - 460V
❷	**Output Contact Condition**	**R**	Normally De-energized
❸	**Frequency**	**7**	50/60Hz

EUVR

Static AC Undervoltage Relay

- Micro-compact design
- Under voltage protection
- Single-phase
- A wide range of voltage settings, including continuously variable settings
- LED for operating voltage check and operation status display
- No intermittent voltage fluctuation and malfunction thanks to the signal accumulation prevention circuit
- Strong environmental resistance
- Only N TYPE available

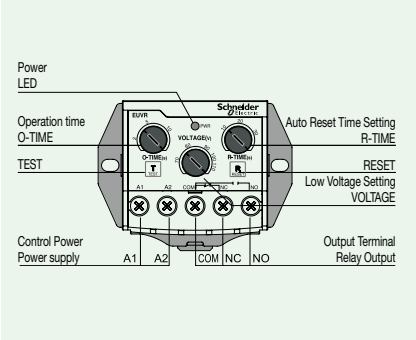

Protection Function

List	Operation Time
Over Voltage	O-TIME

Specifications

Voltage Settings		Type	Settings range (EUVR)
		110	AC70V - 110V
		220	AC160V - 220V
		380	AC300V - 380V
Time Settings	Operation Time	O-TIME	0.2 - 10 seconds
	Reset Delay	R-TIME	0.5 - 30 seconds
Reset			Manual/Auto reset
Operation Status Display			LED
Tolerance		Voltage	±5%
		Time	±5%
Insulation	Voltage	Between case and circuit	10㏁ or over with a DC500V Megger
	Withstanding Voltage	Between case and circuit	2.0kV power frequency for 1 minute
		Between contacts	1.0kV power frequency for 1 minute
		Between circuits	2.0kV power frequency for 1 minute
Auxiliary Contact		1-SPDT (1C)	AC250V/3A Resistive load
Auxiliary Contact Condition		N TYPE	Normally energized (When input voltage is normal: COM-NO: Close)
Environment	Temperature	Storage	-30 - 80℃
		Operation	-20 - 60℃
	Humidity		30% - 85% RH at non-condensing state
Installation			35mm DIN-Rail/Panel

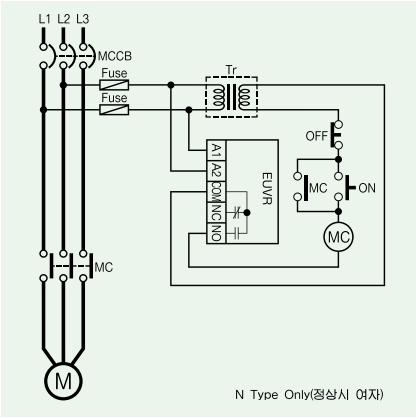

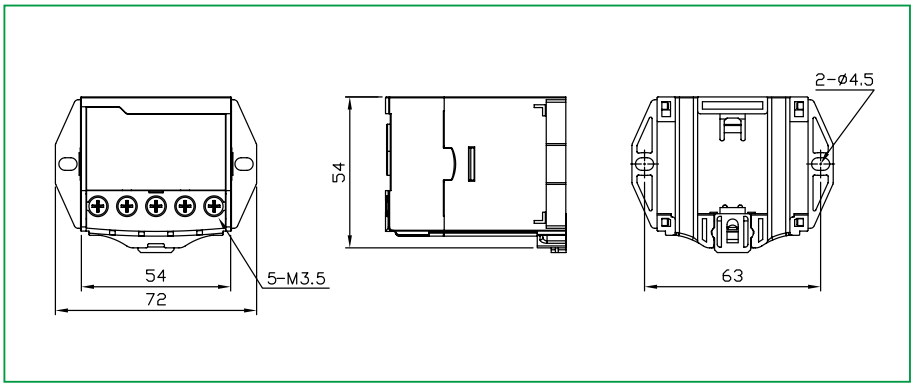

EUVR

How to Order

Reference		Input Voltage [V]	Output Contact	Frequency
EUVR	-110N7	AC110V	N	50/60
	-220N7	AC220V	N	50/60
	-380N7	AC380V	N	50/60

Ordering Example

To order an EUVR:

E U V R – 1 1 0 N 7

❶ ❷ ❸

❶	**Input Voltage**	**110**	AC70V - 110V
		220	AC160V - 220V
		380	AC300V - 380V
❷	**Output Contact Condition**	**R**	Normally Energized
❸	**Frequency**	**7**	50/60Hz

EVR-PD/FD

Digital Three Phase Voltage Relay

- Built-in MCU/Panel Mounting Type
- Over voltage/Under voltage/Reverse phase/Phase loss/Voltage unbalance protection
- Display with automatic circulation of three phase line voltages at intervals of 5 seconds
- Enables intensive control of only one phase
- Individual settings for over voltage operation time and under voltage operation time
- Manual reset/Auto reset selectively applicable
- Auto reset time: Selection of 1 - 10 seconds available
- Reverse phase/Unbalance/Phase loss protection: OFF (Disable) available
- Able to check the causes of trip and operating voltage at trip
- Able to remember the last three trip causes
- Self-test function

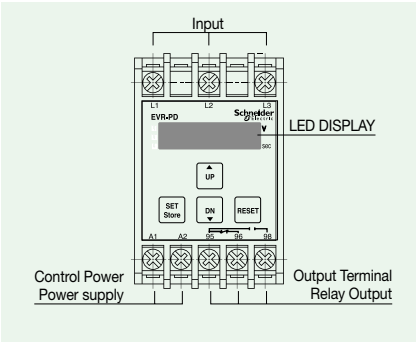

EVR-PD (Built-in panel)

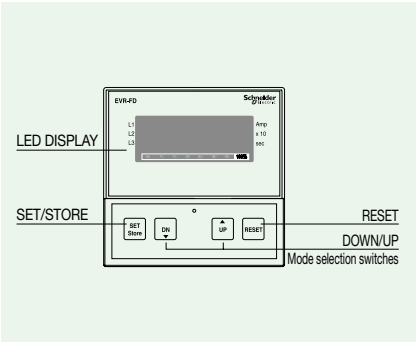

EVR-FD(Built-in panel)

Protection Function

List	Operation Time
Over Voltage	OVR-TIME
Under Voltage	UVR-TIME
Phase Loss	Within 0.5 seconds
Unbalance	0.5 - 10 seconds
Reverse phase	0.1 seconds

Protection Function and Display

Function	LED Display	Trip Causes	Remark
Over Voltage	L1 L2 L3 :o460 A sec	Operates when over voltage is detected at L1 and L3 Phases	DN UP Trip cause and voltage check You can check the causes of trip and voltage of three phases with the Up/Down buttons.
Under Voltage	L1 L2 L3 :u310 A sec	Operates when under voltage is detected at L1 and L2 Phases	
Phase Loss	L1 L2 L3 -PL- A sec	Operates in the event of phase loss at L3 Phase	
Reverse Phase	L1 L2 L3 -AP- A sec	Trips upon reverse phase	
Unbalance	L1 L2 L3 :U420 A sec	Operates in the event of an unbalance at L2 and L3 Phases	

- In the event of an unbalance, the minimum line voltage is displayed. (Similarly to the case of over voltage and under voltage, two operation status display lamps will be illuminated.)

Display

- Three phase line voltages are displayed (Display each line voltage at 5-second intervals during operation.)

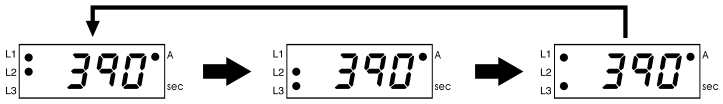

EVR-PD/FD

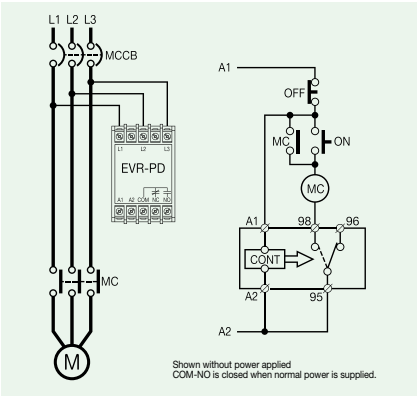

EVR-PD

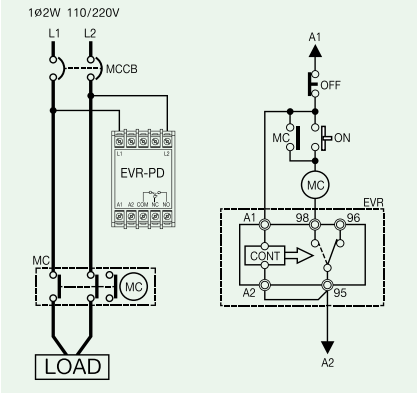

EVR-PD (for 1 Ø 220V)

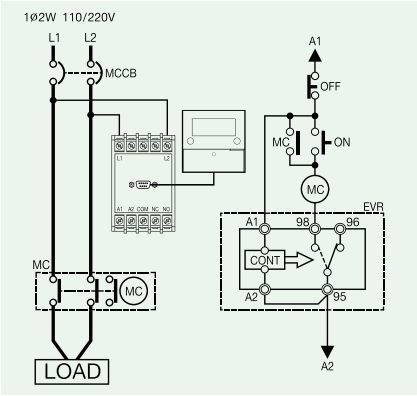

EVR-FD

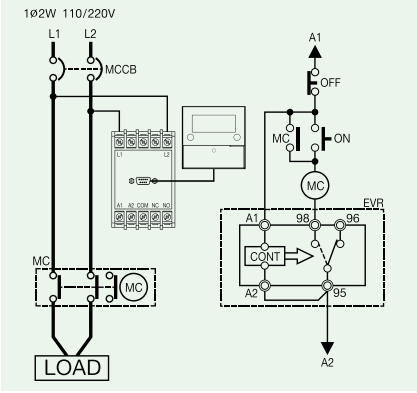

EVR-FD (for 1 Ø 220V)

Specifications

Voltage Settings		Type	1Ø, 3Ø 110	1Ø, 3Ø 220	3Ø 440
		Over Voltage	110V - 150V	220V - 300V	380V - 500V
		Under Voltage	80V - 120V	160V - 240V	300V - 440V
Operation Time		OVR	0.2 - 10 seconds		
		UVR	0.2 - 10 seconds		
Unbalance			Ub--(OFF), 5 - 30%		
Unbalance Operation Time			0.5 - 10 seconds		
Phase Loss			Operates within 0.5 seconds, PL--(OFF), line voltage difference of 45% or above between the maximum phase and minimum phase		
Reverse Phase			0.1 seconds, RP--(OFF)		
Reset			Manual (instant) Reset/Electrical reset		
			Auto reset	1 - 10 seconds	
Tolerance		Voltage	±5V		
		Time (Definite time)	t ≤ 3s: ±0.2s, t 〉 3s: ±5		
Environment	Temperature	Operation	-20℃ - 60℃		
		Storage	-30℃ - 80℃		
	Humidity		30 - 85% RH at non-condensing state		
Control Voltage		220V	AC/DC85V - 250V, 50Hz or 60Hz		
Output Contact			1C, AC250V/3A Resistive load		
Insulation Resistance		Between case and circuit	10MΩ or above at 500VDC		
Insulation Voltage		Between case and circuit	2.0KV, 60Hz for 1 minute		
		Between contacts	1.0KV, 60Hz for 1 minute		
		Between circuits	2.0KV, 60Hz for 1 minute		
Installation	PD	Integral	35mm DIN-Rail/Panel		
	FD	Control/Display part	Panel mounted (Flush Mounting)		
		Power/Output part	35mm DIN-Rail/Panel		

※ Common: 440Type does not recognize voltage of 250V or lower (220Type: 110V or lower, 110Type: 70V or lower).

How to Set

1.Mode	DN ▼ UP ▲	Find a mode to set using the Up/Down buttons.
2.Set	SET Store	If you press the Set/Store button once, the selected mode and value will blink. Finish the setup while they are blinking.
3.Adjust	DN ▼ UP ▲	Select the value or character you want with the Up/Down buttons.
4.Store	SET Store	If you press the Set/Store again, the selected value or character will be saved and blinking will stop.
5.Reset	RESET	To complete the setting, press the Reset button or leave it for 30 seconds.

※ Trip Cause Check
Press the Up/Down buttons to select the "Trip" mode, and press the Set/Store button to check the last trip cause. In this state, whenever you press the Up/Down buttons, each line voltage at the time of the trip is displayed, and the second trip cause will be shown. You can also check the failure causes and current during the trip in the same way that you check the last trip cause.

※ Display through Manual Circulation
You can switch to L1-L2, L2-L3, and L3-L1 phases by pressing the Set (Store) button. (i.e., you are now entering Manual Display Mode.) You can switch back to Auto Display Mode by pressing the Reset button. You can switch to each of the settings modes by pressing the Up/Down buttons in Manual Display Mode.

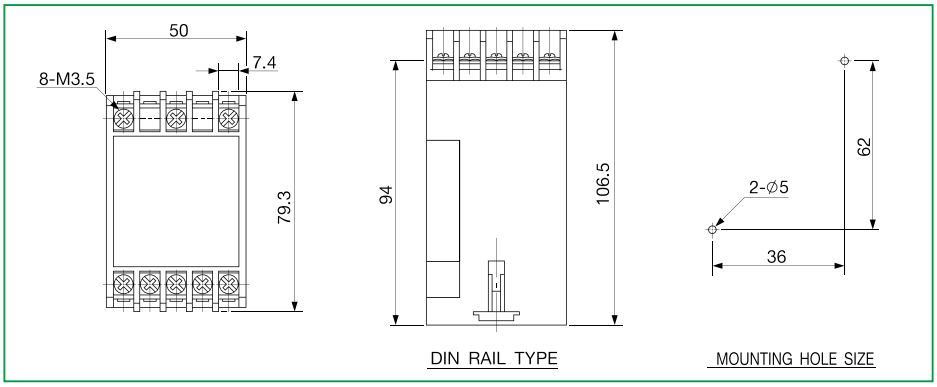

EVR-PD

The Sequence of Mode Settings and Description

* The sequence of function settings
- Find the desired mode using the Up/Down buttons.
- To find "ot" in the picture to the right, press the UP SW button 3 times (moving through the mode settings in a clockwise direction).

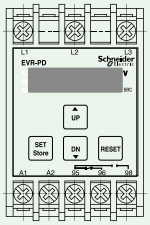

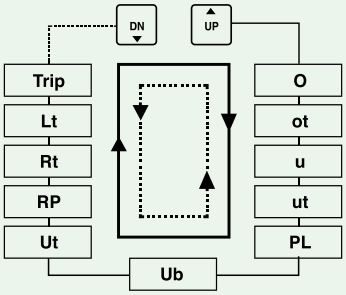

■ Set each mode function as shown below according to the function setting sequence.

No.	List	Setting range (Display)	FND Display	Remark
1	Over Voltage	110: 100V - 150V 220: 220V - 300V 440: 380V - 500V	o456°	Over voltage is set at 456V. Cannot set voltage at the set under voltage value or less
2	Over Voltage Operation Time Setting	0.2 - 10 seconds	ot 5.	Trips at definite time
3	Under Voltage Setting	110: 80V - 120V 220: 160V - 240V 440: 300V - 440V	u340°	Under voltage is set at 340V. Cannot set voltage at the set over voltage value or higher
4	Under Voltage Operation Time Setting	0.2 - 10 seconds	ut 5.	Trips at definite time
5	Phase Loss	ON (PLon), OFF (PL--)	PLon	Trips when the line voltage difference between the maximum phase and minimum phase is 45% or more
6	Unbalance Trip Selection	5% - 30% OFF (Ub--)	Ub 5	Trips when the line voltage difference between the maximum phase and minimum phase is the set % or more
7	Unbalance Operation Time Setting	0.5 - 10 seconds	Ut 4.	Trips at definite time
8	RPR (Reverse phase) Function	ON (Rpon), OFF (RP--)	RPon	Trips for 0.1 seconds
9	Auto Reset Time Setting	Auto reset: 1 - 10 seconds, OFF (--)	rt 10.	Auto resets at 98% of the over voltage set value or less and 102% of the under voltage set value or more
10	Three Phase Voltage Power Outage Time Setting	0.5 - 10 seconds, Instant protection (--)	Lt 3.	Time for trip to be triggered by power outage when no three-phase voltages are available
11	Trip Cause Display	From the 1st to the 3rd cause	tr 1P	The latest trip cause is displayed first. Trip causes and voltage of each phase can be checked.

※ The lamp display on the FIND Display Window should be exactly the same as the display shown on page 63.

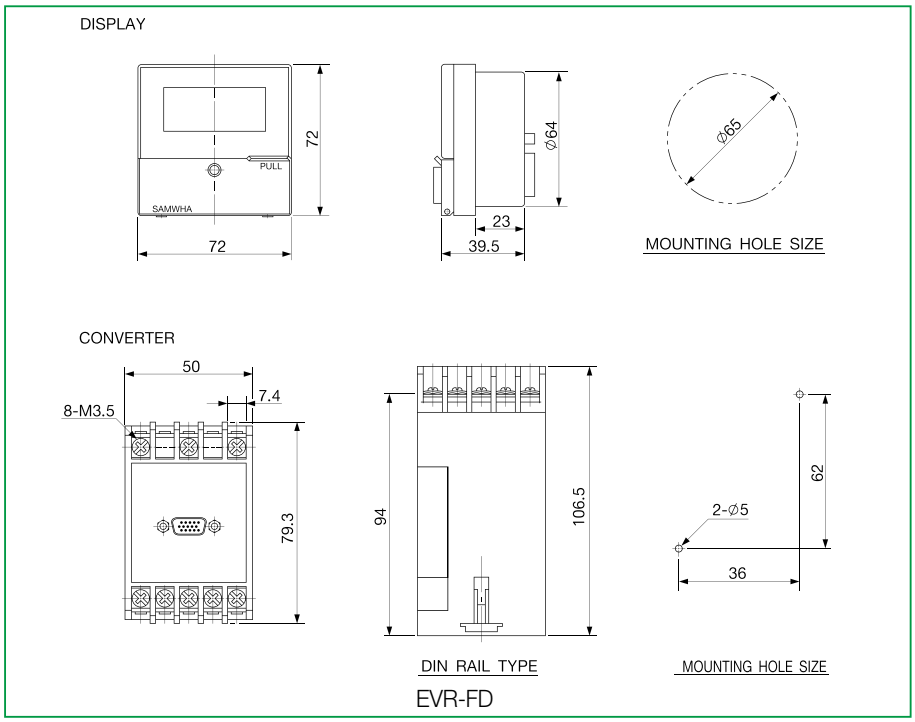

Description of trip
- When control power (the voltages entering into A1 and A2) and normal three-phase voltages are entered, 95 and 98 will close.
- Normal three-phase voltages refer to three-phase voltages that lie between the under voltage and over voltage set values.
- If the voltage is out of the set value range, or if phase loss or reverse phase is entered, 95 and 98 will not close.

EVR-PD/FD

How to Order

Reference		Contact Output	Input Voltage [V]	Control Power		Installation
				Voltage [V]	Frequency [Hz]	
EVRPD	-220NZ6M	N	AC220V	AC/DC85V - 250V	60	Panel/DIN Rail
	-440NZ6M	N	AC440V	AC/DC85V - 250V	60	Panel/DIN Rail
	-110NZ6SM	N	AC110V	AC/DC85V - 250V	60	Single-phase
	-220NZ6SM	N	AC220V	AC/DC85V - 250V	60	Single-phase
	-220NZ5M	N	AC220V	AC/DC85V - 250V	50	Panel/DIN Rail
	-440NZ5M	N	AC440V	AC/DC85V - 250V	50	Panel/DIN Rail
EVRFD	-220NZ6M	N	AC220V	AC/DC85V - 250V	60	Panel/DIN Rail
	-440NZ6M	N	AC440V	AC/DC85V - 250V	60	Panel/DIN Rail
	-110NZ6SM	N	AC110V	AC/DC85V - 250V	60	Single-phase
	-220NZ6SM	N	AC220V	AC/DC85V - 250V	60	Single-phase
	-220NZ5M	N	AC220V	AC/DC85V - 250V	50	Panel/DIN Rail
	-440NZ5M	N	AC440V	AC/DC85V - 250V	50	Panel/DIN Rail

• Accessory

Accessory1			
Model	Reference	PIN Type	Length (M)
Cable	CABLE-15-00H	15PIN	0.5
	CABLE-15-001	15PIN	1
	CABLE-15-01H	15PIN	1.5
	CABLE-15-002	15PIN	2
	CABLE-15-003	15PIN	3
	⋮	⋮	⋮
	CABLE-15-010	15PIN	10

Ordering Example

To order an EVR-PD:

E V R P D – 2 2 0 N Z 6 M

❶ ❷ ❸ ❹

❶	Input Voltage	OVR	110	3P, AC110V - 150V
			220	3P, AC220V - 300V
			440	3P, AC380V - 500V
		UVR	110	3P, AC80V - 120V
			220	3P, AC160V - 240V
			440	3P, AC300V - 440V
❷	Output Contact Condition	N	Normally Energized	
❸	Control Power/ Frequency	Z6	AC/DC85V - 250V, 60Hz	
		Z5	AC/DC85V - 250V, 50Hz	
❹	Mode	M	Mode Type	

To order an EVR-FD:

E V R F D – 2 2 0 N Z 6 M

❶ ❷ ❸ ❹

❶	Input Voltage	OVR	110	3P, AC110V - 150V
			220	3P, AC220V - 300V
			440	3P, AC380V - 500V
		UVR	110	3P, AC80V - 120V
			220	3P, AC160V - 240V
			440	3P, AC300V - 440V
❷	Output Contact Condition	N	Normally Energized	
❸	Control Power/ Frequency	Z6	AC/DC85V - 250V, 60Hz	
		Z5	AC/DC85V - 250V, 50Hz	
❹	Mode	M	Mode Type	

※Please write the appropriate cable code for the length required.

To order a cable:

C A B L E – 1 5 – 0 0 H

❶ ❷

❶	Cable Connection	15PIN	
❷	Cable Length	00H	0.5M
		1	1M
		01H	1.5M
		2	2M
		...	...
		10	10M

4. DC Voltage Protection Relay

●DOVR
(Electronic DC Over Voltage Relay)

●DUVR
(Electronic DC Under Voltage Relay)

●DVR
(Digital DC Voltage Relay)

DOVR/DUVR

Electronic DC Overvoltage Relay/Electronic DC Undervoltage Relay

- Micro-compact design
- Definite time-based
- Trip status check (LED)
- Operating voltage check and detailed settings are possible thanks to the voltmeter feature
- Static DC Over Voltage/Under Voltage Relay to prevent any disasters related to abnormal over voltage or voltage drop in general industrial equipment

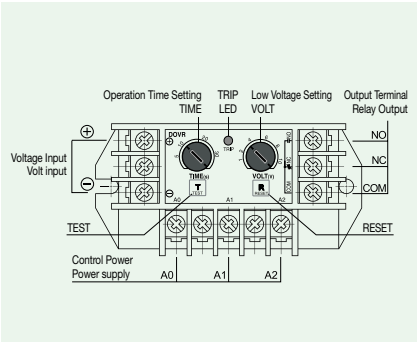

DOVR

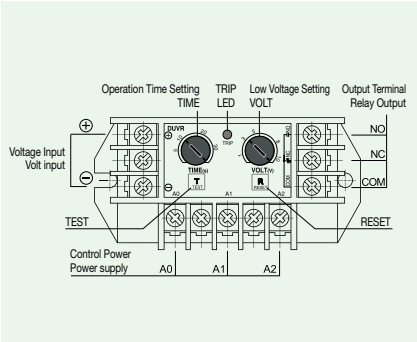

DUVR

Protection Function

List	Operation Time	
	DOVR	DUVR
Over Voltage	O-TIME	-
Under Voltage	-	O-TIME

Specifications

Model			DC Over Voltage Relay (DOVR)	DC Under Voltage Relay (DUVR)
Voltage Settings		Type	Voltage adjust range	
		10	1V - 10V	-
		30	3V - 30V	3V - 30V
		110	10V - 110V	20V - 110V
		220	20V - 220V	30V - 220V
		Others	Produced on demand	
Time Setting	Operation Time	O-TIME	0.2 - 30 seconds	
Reset		M	Manual (Instant)/Electrical reset	
		A	※Auto (Instant) Reset (Option)	
Control Power		220	AC110/220V, 50/60Hz	
		Others	Produced on demand	
Auxiliary Contact	Format/Rating	1-SPDT(1C)	AC250V/3A Resistive load	
	State	R TYPE	Normally de-energized	
Installation			Panel	

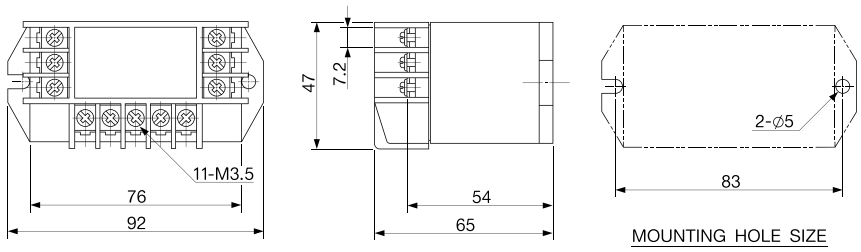

DOVR/DUVR

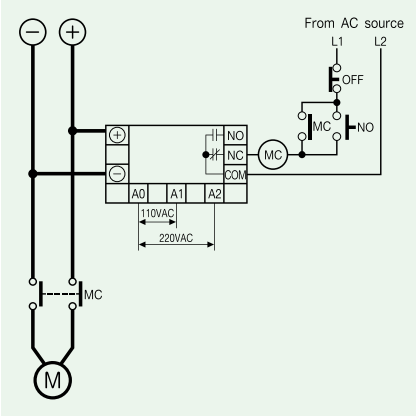

How to Order

Reference		Direct Input Voltage [V]	Contact Output	Control Power		Reset	Remark
				Voltage [V]	Frequency [Hz]		
DOVR	-10RY7R	1 - 10	R	AC110/220V	50/60	Auto	For panels only
	-10RY7M	1 - 10	R	AC110/220V	50/60	Manual	For panels only
	-30RY7R	3 - 30	R	AC110/220V	50/60	Auto	For panels only
	-30RY7M	3 - 30	R	AC110/220V	50/60	Manual	For panels only
	-110RY7R	10 - 110	R	AC110/220V	50/60	Auto	For panels only
	-110RY7M	10 - 110	R	AC110/220V	50/60	Manual	For panels only
	-220RY7R	20 - 220	R	AC110/220V	50/60	Auto	For panels only
	-220RY7M	20 - 220	R	AC110/220V	50/60	Manual	For panels only
DUVR	-30RY7R	3 - 30	R	AC110/220V	50/60	Auto	For panels only
	-30RY7M	3 - 30	R	AC110/220V	50/60	Manual	For panels only
	-110RY7R	10 - 110	R	AC110/220V	50/60	Auto	For panels only
	-110RY7M	10 - 110	R	AC110/220V	50/60	Manual	For panels only
	-220RY7R	20 - 220	R	AC110/220V	50/60	Auto	For panels only
	-220RY7M	20 - 220	R	AC110/220V	50/60	Manual	For panels only
	-220RY7R	20 - 220	R	AC110/220V	50/60	Auto	For panels only
	-220RY7M	20 - 220	R	AC110/220V	50/60	Manual	For panels only

Ordering Example

To order a DOVR:

D O V R – 1 1 0 R Y 7 M

❶ ❷ ❸ ❹

❶	**Input Voltage**	**10**	DC1V - 10V
		30	DC3V - 30V
		110	DC10V - 110V
		220	DC20V - 220V
❷	**Output Contact Condition**	**R**	Normally De-energized
❸	**Control Power**	**Y7**	AC110/220V (50/60Hz)
❹	**Reset**	**M**	Manual
		R	Auto

To order a DUVR:

D U V R – 1 1 0 R Y 7 M

❶ ❷ ❸ ❹

❶	**Input Voltage**	**30**	DC3V - 30V
		110	DC10V - 110V
		220	DC20V - 220V
❷	**Output Contact Condition**	**R**	Normally De-energized
❸	**Control Power**	**Y7**	AC110/220V(50/60Hz)
❹	**Reset**	**M**	Manual
		R	Auto

DVR

Digital DC Voltage Relay

- Built-in MCU (Microprocessor Control Unit)
- Real Time Processing/Higher Precision
- DC motor/DC device protection
- Separate settings for over voltage/under voltage
- Line voltage display function (Display window)
- Digital settings/Digital display of trip cause data (Display window)
- Causes of the last three trips saved
- Auto Reset/Reset delay time settings
- Each set value check/TEST FUNCTION
- De-energization release function (No Voltage Release/Fail-safe Operation) settings (→ NVR Settings)

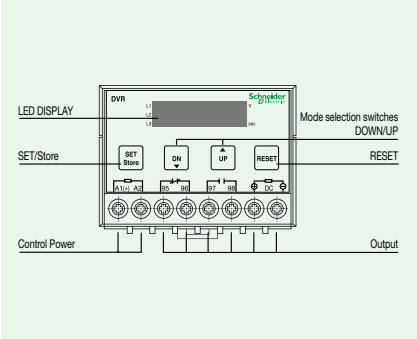

DVR

Protection Function

List	Operation Time
Over Voltage	O-TIME
Under Voltage	O-TIME

Protection Function and Display

List	LED Display	Trip cause
Over Current	o 110°	Trips when over voltage detected
Under Voltage	u 70°	Trips when under voltage detected

Specifications

Over Voltage Settings	OVR	110VDC	110V - 160V
		220VDC	220V - 320V
Under Voltage Settings	UVR	110VDC	OFF, 60V - 110V
		220VDC	OFF, 160V - 240V
Over Voltage Operation Time			0.5 - 25 seconds
Under Voltage Operation Time			0.5 - 25 seconds
Reset			Manual (immediate) Reset/ Electrical reset
			Auto reset: 0.5 - 25 seconds
Tolerance		Current	±5%
		Time	±5%
Environment	Temperature	Operation	-10℃ - 60℃
		Storage	-20℃ - 80℃
	Humidity		30 - 85%RH at non-condensing state
Control Power			220V : AC/DC 85V - 250V
Output Contact			1a1b, AC250V/3A Resistive load
Insulation	Resistance	Between case and circuit	10MΩ or over with a DC500V Megger
	Withstanding Voltage	Between case and circuit	2.0kV power frequency for 1 minute
		Between contacts	1.0kV power frequency for 1 minute
		Between circuits	2.0kV power frequency for 1 minute
Power Consumption			Less than 3W
Installation			35mm DIN-Rail/Panel

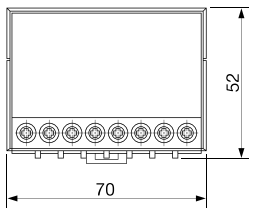

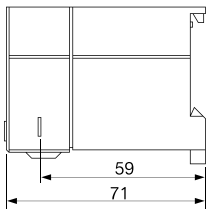

DIN RAIL TYPE

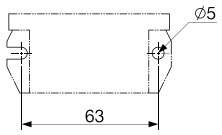

BRACKET HOLE SIZE

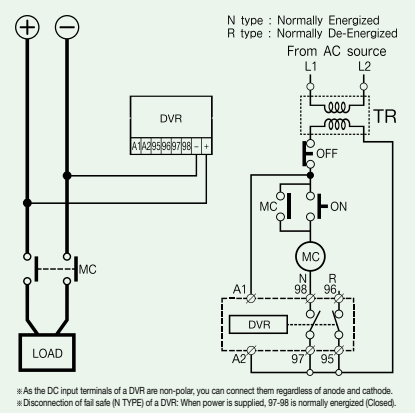

※As the DC input terminals of a DVR are non-polar, you can connect them regardless of anode and cathode.
※Disconnection of fail safe (N TYPE) of a DVR: When power is supplied, 97-98 is normally energized (Closed).

※FS→OFF

Contact	Control Power OFF	Control Power ON	Trip
95-96	Close	Close	Open
95-98	Open	Open	Close

※FS→ON

Contact	Control Power OFF	Control Power ON	Trip
95-96	Close	Open	Close
95-98	Open	Close	Open

How to Set

1.Mode	DN UP	Select the mode to set using the Up/Down buttons.
2.Set	SET Store	If you press the Set/Store button once, the selected mode and value will blink. Finish the setup while it is blinking.
3.Adjust	DN UP	Select the value or character you want using the Up/Down buttons.
4.Store	SET Store	If you press Set/Store again, the selected value or character will be saved and blinking will stop.
5.Reset	RESET	To complete the setting, press the Reset button or leave it for 30 seconds.

※ Trip Cause Check
Press the Up/Down buttons to select "Trip" mode and then press the Set/Store button to check the last trip cause. In this state, whenever you press the Up/Down buttons, you can check up to the last three trip causes.

Setting Sequence

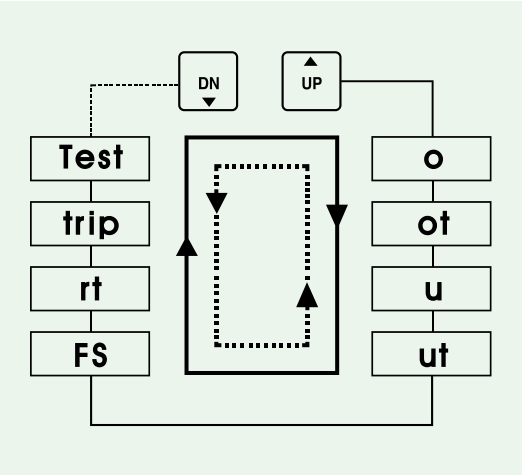

Function of Each Mode and How to Set

No.	List		Setting range (Display)	FND Display	Remark
1	Over Voltage Setting	110VDC	100V - 160V	c 100°	Over Voltage is set at 100A. Cannot set voltage at set under voltage value or less
		220VDC	220V - 320V		
2	Over Voltage Operation Time Setting		0.5 - 25 seconds	ot 5.	Trips at definite time
3	Under Voltage Setting	110VDC	OFF, 60V - 110V	u 80°	Under voltage is set at 80V Cannot set voltage higher than the over voltage set value
		220VDC	OFF, 160V - 240V		
4	Under Voltage Operation Time Setting		0.5 - 25 seconds	ut 5.	Trips at definite time
5	Fail Safe (NVR) Function		ON(Fson), OFF (FS--)	FSon	Cannot set while operating
6	How to Reset		Auto reset: 0.5 - 25 seconds OFF (rt--)	rt--.	For an Auto reset trip, Reset after the set time has passed
7	Trip Cause Display		From the 1st to 3rd cause	trIP	The latest trip cause is displayed first. Up to the last three trip causes can be checked.
8	TEST Function		END will be displayed after the ot value is counted after 3 seconds.	TEST → 3 sec. 10. → 0-Time End Test not available during operation	

DVR

How to Order

Reference		DC INPUT Voltage [V]	Control Power		Remark
			Voltage [V]	Frequency [Hz]	
DVR	-110B	110	AC/DC24V		Only for DIN Rail
	-110Z7	110	AC/DC85V - 250V	50/60	Only for DIN Rail
	-220B	220	AC/DC24V		Only for DIN Rail
	-220Z7	220	AC/DC85V - 250V	50/60	Only for DIN Rail

Ordering Example

To order a DVR:

D V R – 1 1 0 B

❶ ❷

❶	**Input Voltage**	**OVR**	110: DC110V - 160V
			220: DC220V - 320V
		UVR	110: DC60V - 110V
			220: DC160V - 240V
❷	**Power Supply/ Frequency**	**B**	AC/DC24V
		Z7	AC/DC85V - 250V, 50/60Hz

5. Other Applied Relays

● ELR
(Earth fault over current relay (Zero phase current detection type))

● EFR-2.5
(Earth fault over current relay (Residual current detection type))

● EGR
(Electronic earth fault protection relay (Zero phase current detection type))

● SDDR-C
(Shut Down Delay Relay)

● PMR
(Electronic reverse phase/phase loss relay)

● CT
(EOCR combination transformer)

● ZCT
(Zero phase current detection)

● SR-CT
(EOCR combination transformer)

ELR

Ground Overcurrent Relay (Zero Current Detection)

- Built-in MCU
- Precise earth fault protection function
- Earth fault protection of power systems and motors
- Earth fault current detection by zero phase current transformer
- Separate settings for current and trip delay time
- LED input power and operation status display
- Flush mounting

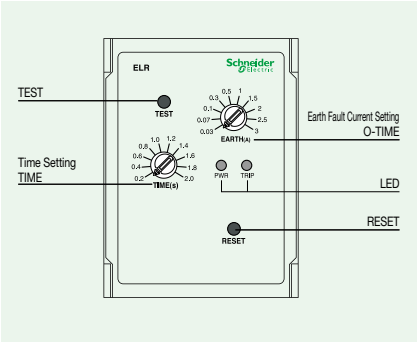

Application

- Earth fault protection for distribution lines
- Earth fault protection for high-resistance grounded lines
- Earth fault protection for general load
- Earth fault protection for reactor grounded lines

Protection Function

List	Operation Time
Earth Fault	O-TIME

Specifications

Current Setting		Settings range
		0.03A - 3A
Time Setting		0.2 - 2 seconds
Trip Property		At definite time
Control Power		AC220V, ± 15%
		AC110V, ± 15%
		AC/DC 110V - 240V, -15%, +10%
Auxiliary Contact	Format	1-SPDT (1c), R TYPE (Normally de-energized)
	Rating	AC250V/5A
Frequency		50/60Hz
Installation		Flush mounting

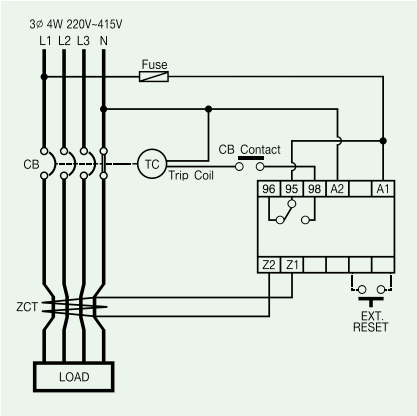

DIMENSIONS(mm)

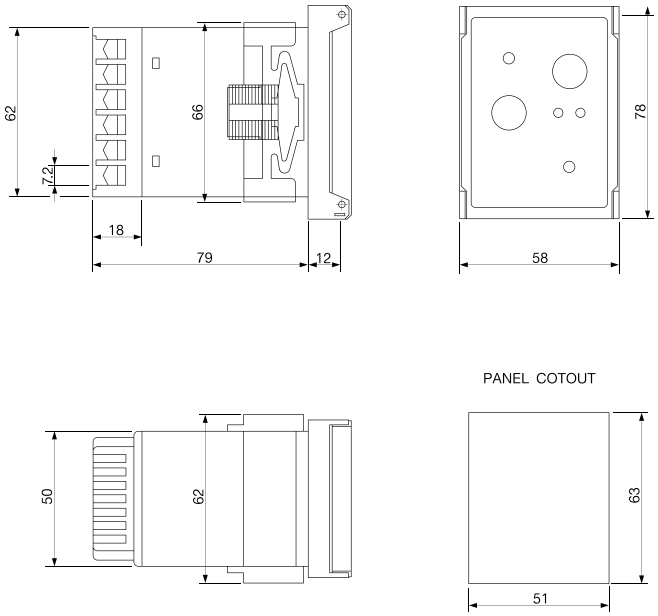

How to Order

Reference		Earth Fault Current Range [A]	Contact Output	Control Power		Remark
				Voltage [V]	Frequency [Hz]	
ELR	-30RM7	0.03A - 3A	R	AC220V	50/60	Flush Mounting
	-30RF7	0.03A - 3A	R	AC110V	50/60	Flush Mounting
	-30RU	0.03A - 3A	R	AC/DC110V - 240V	50/60	Flush Mounting

• Accessory

Accessory4		
Model	Reference	Diameter (mm)
ZCT	ZCT-035	35
	ZCT-080	80
	ZCT-120	120

Ordering Example

To order an ELR:

E L R – 3 0 R U

❶ ❷ ❸

❶	Current Range	30	0.03A - 3A
❷	Output Contact Condition	R	Normally De-energized
❸	Control Power/ Frequency	F7	AC110V, 50/60Hz
		M7	AC220V, 50/60Hz
		U	AC/DC100 - 240V, 50/60Hz

To order a ZCT:

Z C T – 0 3 5

❶

❶	Diameter	35	35mm
		80	80mm
		120	120mm

EFR-2.5

Ground overcurrent relay (Residual current detection type)

- Built-in MCU
- Precise earth fault protection function
- Earth fault protection for power systems and motors
- Residual current detection
- Separate settings for current and trip delay time
- LED input power and operation status display
- Grounded system protection
- Flush mounting

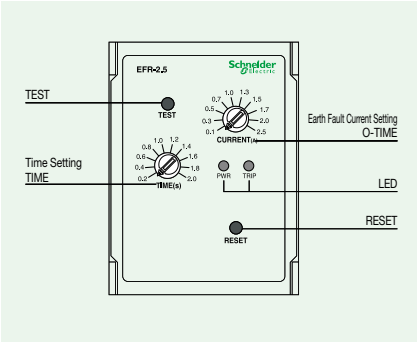

Application

- Earth fault protection for distribution lines
- Earth fault protection for direct grounding lines
- Earth fault protection for reactor grounded lines
- Earth fault protection for general load
- Earth fault protection for high-resistance grounded lines

Protection Function

List	Operation Time
Earth fault	O-TIME

Specifications

Current Setting		Setting range
		0.1A - 2.5A
Time Setting		0.2 - 2.0 seconds
Trip Property		At definite time
Control Power		AC220V ± 15%
		AC110V ± 15%
Auxiliary Contact	Format	1-SPDT (1c), R TYPE (Normally de-energized)
	Rating	AC250V/5A
Frequency		50/60Hz
Installation		Flush mounting

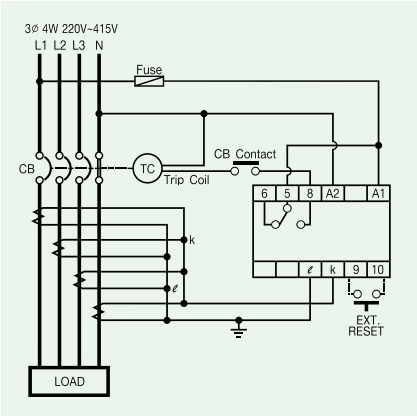

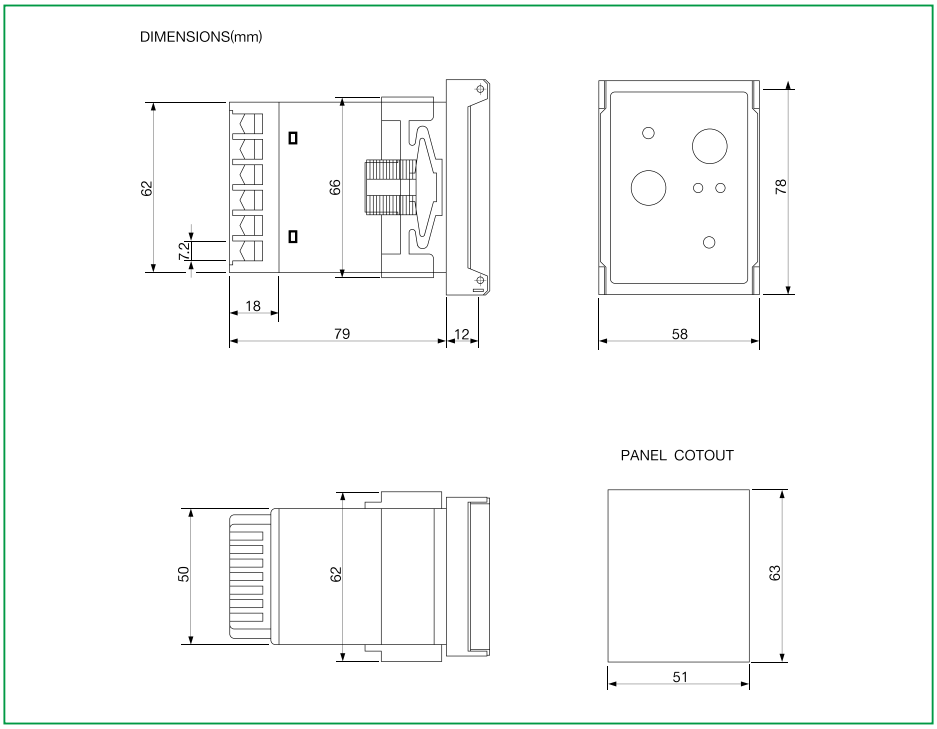

How to Order

Reference		Earth Fault Current Range [A]	Contact Output	Control Power		Remark
				Voltage [V]	Frequency [Hz]	
EFR	-25RM7	0.1A - 2.5A	R	AC220V	50/60	Flush Mounting
	-25RF7	0.1A - 2.5A	R	AC110V	50/60	Flush Mounting

Ordering Example

To order an EFR:

E F R – 2 5 R M 7

❶ ❷ ❸

❶	**Current Range**	**25**	0.1A - 2.5A
❷	**Output Contact Condition**	**R**	Normally De-energized
❸	**Control Power/ Frequency**	**F7**	AC110V, 50/60Hz
		M7	AC220V, 50/60Hz

EFR-2.5

Ground overcurrent relay (Residual current detection type)

EGR (패널매입형)

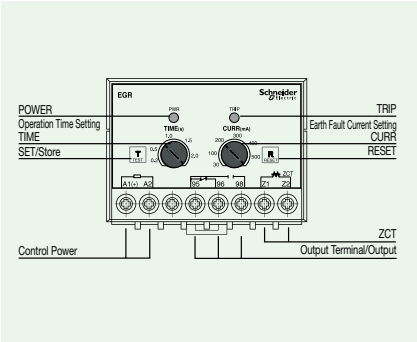

- Micro-compact design
- Earth fault protection function with the zero phase current detection method
- Definite time-based
- Trip status check (2-LED)
- Internal circuit inspection function with the TEST button
- Manual (Instant)/Electrical Reset/Auto Reset (0.3 sec)
- De-energization release function: Output relay normally energized at normal

Protection Function

List	Operation Time
Earth Fault	O-TIME

Specifications

Current Settings		Type	Setting range
		5	30 - 500mA
		10	100 - 1000mA
		20	500 - 2500mA
Time Setting	Operation Time	O-TIME	0.2 - 2.0 seconds
Reset			Manual (Instant)/Electrical Reset (Push the Reset button or block L1 and L2.)
			Auto reset: 0.3 second
Tolerance		Current	±10%
		Time	±15%
Control Power			AC/DC 85V - 250V, 50/60Hz
			AC/DC 24V
LED Display		POWER (Green)	Operation display
		OVER (Red)	Trip display
Auxiliary Contact		SPDT	AC250V/3A Resistive load
		Status	Normally de-energized(95 ⊣⊢ 98 Open, 95 ⊣⊢ 96 Close) R TYPE
Environment	**Temperature**	Operation	-20 - 60℃
		Storage	-30 - 80℃
	Humidity		30% - 85% RH at non-condensing state
Installation			35mm DIN-Rail/Panel

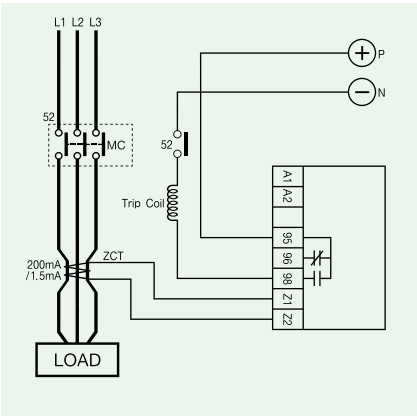

※ DO NOT GROUND THE ZCT TERMINAL.

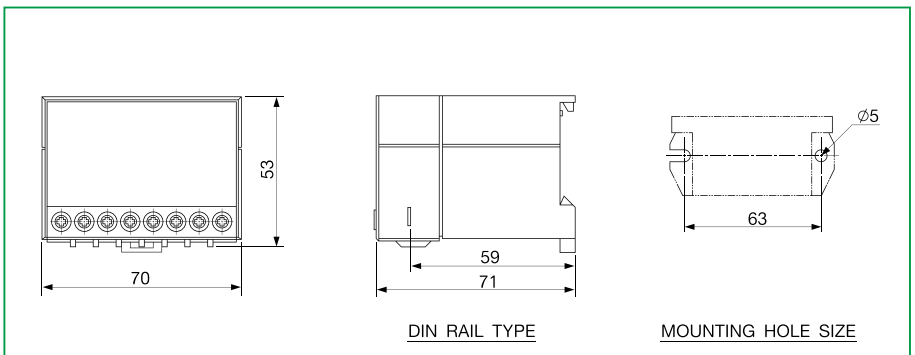

How to Order

Reference		Earth Fault Current Range [A]	Contact Output	Control Power		Reset
				Voltage [V]	Frequency [Hz]	
EGR	-05NZ7R	5	N	AC110/220V	50/60	Auto
	-05RZ7R	5	R	AC110/220V	50/60	Auto
	-05NZ7M	5	N	AC110/220V	50/60	Manual
	-05RZ7M	5	R	AC110/220V	50/60	Manual
	-10NZ7R	10	N	AC110/220V	50/60	Auto
	-10RZ7R	10	R	AC110/220V	50/60	Auto
	-10NZ7M	10	N	AC110/220V	50/60	Manual
	-10RZ7M	10	R	AC110/220V	50/60	Manual
	-20NZ7R	20	N	AC110/220V	50/60	Auto
	-20RZ7R	20	R	AC110/220V	50/60	Auto
	-20NZ7M	20	N	AC110/220V	50/60	Manual
	-20RZ7M	20	R	AC110/220V	50/60	Manual

• Accessory

Accessory4		
Model	Reference	Diameter (mm)
ZCT	ZCT-035	35
	ZCT-080	80
	ZCT-120	120

Ordering Example

To order an EGR

E G R – 0 5 R B M

❶ ❷ ❸ ❹

❶	Current Range	5	30 - 500mA
		10	100 - 1000mA
		20	500 - 2500mA
❷	Output Contact Condition	R	Normal De-energized
		N	Normal Energized
❸	Control Power/ Frequency	B	AC/DC24V
		Z7	AC/DC85V - 250V, 50/60Hz
❹	Reset	M	Manual
		R	Auto (0.3 sec)

To order a ZCT:

Z C T – 0 3 5

❶

❶	Diameter	35	35mm
		80	80mm
		120	120mm

SDDR-C

Shut Down Delay Relay

- Plug-in type, with built-in MCU
- Settings for shutdown delay time up to 5 seconds
- Settings for delay on make time up to 30 seconds
- Operation Status Display: 2-LED
- Type A/B available

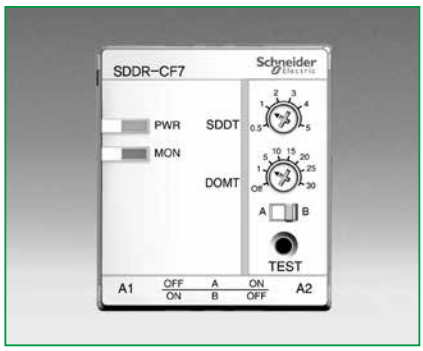

Features

- Resolves the problem of having to restart all related motors when a process is stopped due to a sudden voltage drop.
- In the settings, the maximum shutdown delay time is 5 seconds, and the maximum delay on make time is 30 seconds.

Application

- Continuously running conveyor system and batch-processing chemical plants
- Steel mill transfer equipment and textile factories
- Other magnetic contactors for special load

How to Use

1) Shut Down Delay Time (SDDT)
   Power should be restored within the specified SDDT when momentary power failure occurs for the auto restart function to be triggered by SDDT. If a power failure lasts longer than the specified SDDT, the auto restart function of SDDT will not work, and the user should restart the power manually.
2) Delay on Make Time (DOMT)
   If power fails when a motor is operating normally and it is restored within the specified SDDT, the internal contacts will be kept open at that point for the duration of the set DOMT, and then closed to enable the auto restart.
3) A/B Selection Switch
   After selecting appropriately according to the wiring conditions on the external sequence drawing, press the TEST button to apply immediately.

Cautions for Use

- SDDR operates normally when its internal condenser is charged five seconds after the power is supplied.
- Press the TEST button on a regular basis to perform preventive maintenance checks. It operates in the same way as when a power outage has actually occurred as long as the TEST button is being pressed.
- The voltage level recognized as a power outage varies according to the conditions shown in the table below.

Frequency	Rated Voltage	Power Failure Recognition Voltage	Time of Duration
50Hz	110/115/120VAC	77V - 83V	85ms or over
	220/230/240VAC	154V - 165V	
60Hz	110/115/120VAC	66V - 72V	
	220/230/240VAC	132V - 143V	

- As the power outage recognition voltage may increase if there are many harmonic waves in the control power, a preventive measure such as the use of a harmonic filter will need to be taken in an environment with heavy harmonic waves.
- Cautions for A/B Selection
  The A/B selection button and the wiring conditions on the external sequence drawing should be appropriately set. If the wiring shape and the A/B selection switch do not match, it will not operate.

Operation Status Display

List	LED		Internal Relay Status
	PWR (Green)	MON (Red)	
Power supply			Open
On switch input			Closed
Momentary power outage			Open
Power outage is longer than SDDT			Open
DOMT timer operating			Open
Back to normal operation			Closed

Specifications

Time Setting	SDDT	0.5 - 5 seconds
	DOMT	Off, 1 - 30 seconds
Control Power	110	AC85V - 150V
	220	AC180V - 260V
Frequency	50/60Hz	
Operation Status Display	2×5 Rectangular LED, Green, Red	
Auxiliary Contact	3A/250VAC Resistive load	
Installation	Installation on 8-pin socket	
Temperature	Operation	-20 - 60℃
	Storage	-30 - 80℃
Humidity	30% - 85% RH at non-condensing state	
Insulation Resistance	Between case and circuit	10MΩ or over @500VDC
Insulation Withstanding Voltage	Between case and circuit	2kV50/60Hz, 1 min
Electrostatic Discharge	IEC61000-4-2	Level 3 Air Discharge: ±8kV Contact Discharge: ±6kV
Radiated Disturbance	IEC61000-4-3	Level 3: 10V/m, 80MHz - 1GHz, 1.4GHz - 2.7GHz
EFT/Burst	IEC61000-4-4	Level 3: ±2kV, 1 min
Surge	IEC61000-4-5	Level 3: 1.2×50μs, ±2kV (0°, 90°, 180°, 270°)
Conducted Disturbance	IEC61000-4-6	Level 3: 10V, 0.15 - 80MHz
Emission	CISPR11	Class A (conducted and radiated)
Dimensions	50.0 (W) × 56.6 (H) × 75.0 (D)	
Weight	102.5g	
Life expectancy	6 years	

Applicable Socket Models

Manufacturer	Model
Kun Hung Electric Co., Ltd. (KOINO)	KH-KTS-8
Korea Automatic Control Co., Inc. (KACON)	K2CF08
MENICS	PS-08

Note: Sockets are not provided by Schneider Electric.

Wiring Diagram

Connect the wires as shown below for auto and manual operation.

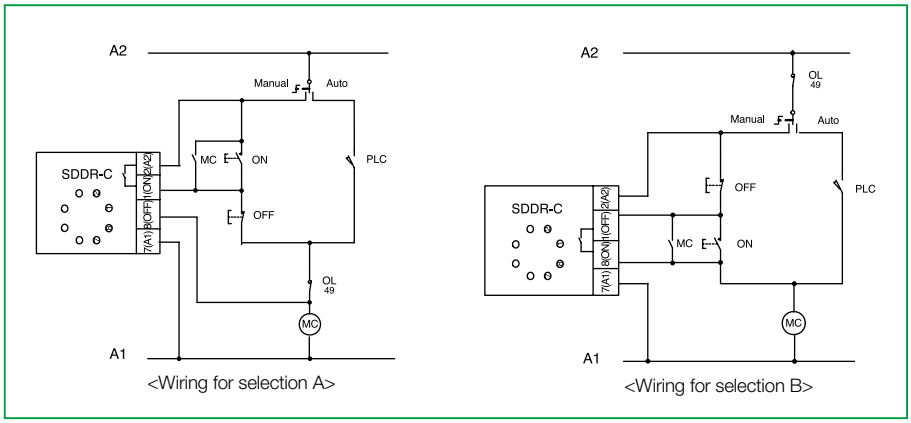

Cautions : In selection A, a short-circuit problem will occur via the internal relay of SDDR-C if A1 and A2 are incorrectly wired. Selection B will operate without any problems even if A1 and A2 are switched.

Dimensions

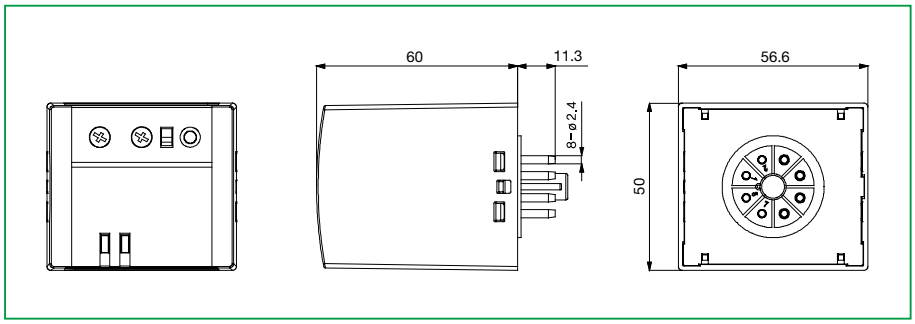

How to Order

Reference		Control Power	
		Voltage [V]	Frequency [Hz]
SDDR	-CF7	AC 110/115/120V	50/60
	-CM7	AC 220/230/240V	50/60

Ordering Example

S D D R – C F 7

❶

❶	Control Power	F7	110/115/120VAC, 50/60Hz
		M7	220/230/240VAC, 50/60Hz

PMR

Electronic reverse phase/phase loss relay

- Phase Monitoring Relay with built-in MCU
- Reverse phase/Phase loss/Voltage unbalance protection
- Voltage unbalance factor: 2 - 15%
- Trip cause check function: 2-LED
- Strong environmental resistance
- Fail-safe Operation

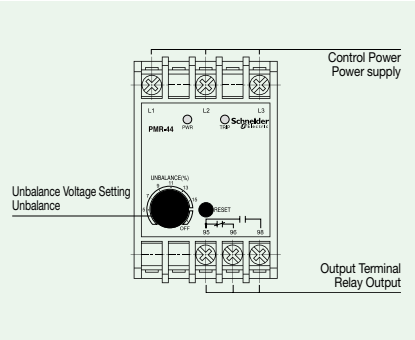

Protection Function

List	Operation Time
Reverse phase	0.1 seconds
Phase loss	1 second
Voltage unbalance	5 seconds [(Three phase arithmetical average voltage - Minimum line voltage) ÷ Three phase arithmetical average voltage] × 100% 2 - 15%
Fail-safe	No relay will be energized if the input power is abnormal.

Specifications

Input Voltage	Type	Setting range
	22	3 Φ 160 - 300V, 50/60Hz
	44	3 Φ 340 - 480V, 50/60Hz
Reset		Manual (Instant)/Electrical (distant) reset ※ If it is tripped due to abnormal input power, it will auto-reset 5 seconds after the input power returns to normal
Auxiliary Contact	Format	1 - SPDT (1C)
	Rating	AC250V/5A Resistive load
	Status	Normally energized (If input power is normal, 95 - 96 open and 95 - 98 close.)
Installation		35mm DIN-rail/Rail

Trip Cause Check

Condition			LED Signal (Pulse Chart)			
			Green LED		Red LED	
Normal operation			On		Off	
Unbalance			On		On	
Trip	Unbalance		Off		On	
	Phase Loss	R	Off		Blinks once	
		S	Off		Blinks 2 times	
		T	Off		Blinks 3 times,	
Reverse phase trip					Alternate blinking	

※ If the cause of a trip occurs during the first time the power is supplied, the relay will not be energized and the cause will be displayed as shown in the table above.

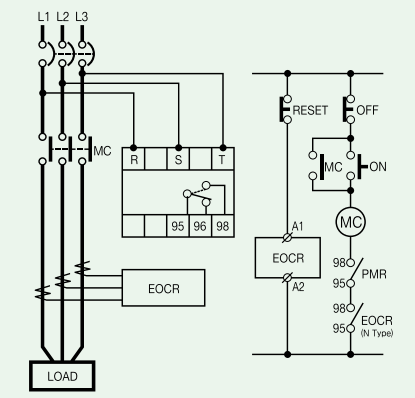

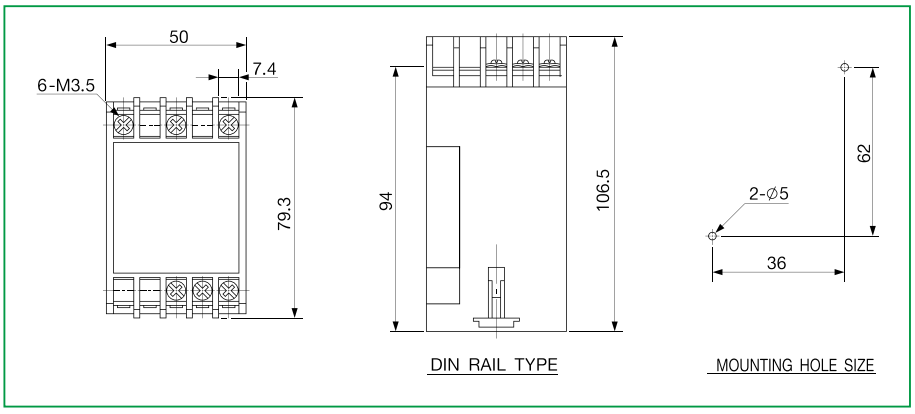

PMR

How to Order

Reference		Input Voltage [V]	Frequency [Hz]	Remark
PMR	-220N7	AC220V	50/60	Panel/DIN Rail
	-440N7	AC440V	50/60	Panel/DIN Rail

Ordering Example

To order a PMR:

P M R – 2 2 0 N 7

❶ ❷ ❸

❶	**Input Voltage**	**220**	AC220V
		440	AC440V
❷	**Output Contact Condition**	**N**	Normally Energized
❸	**Frequency**	**7**	50/60Hz

CT (new model)

Current Transformer for EOCR Combination

EOCR-2CT

EOCR-3CT

• **Combined Use for Bulk Load Protection of EOCR (Definite)**

Specifications

Model Name		2CT	3CT
Current Transformer Ratio	100	100 : 5A	100 : 5A
	150	150 : 5A	150 : 5A
	200	200 : 5A	200 : 5A
	300	300 : 5A	300 : 5A
	400	400 : 5A	400 : 5A
Rating		3.0	3.0
Burden		1.25 VA	1.25 VA
Insulation Voltage		AC600V	AC600V
Insulation Withstanding Voltage		2kV	2kV
Insulation Resistance		10MΩ (DC500V Megger)	10MΩ (DC500V Megger)
Attachment		Panel	Panel

※Burden is based on the Metering Class.
※Do not use these CTs for non-EOCR-related purposes.

Dimensions Diagram

■ **2CT**

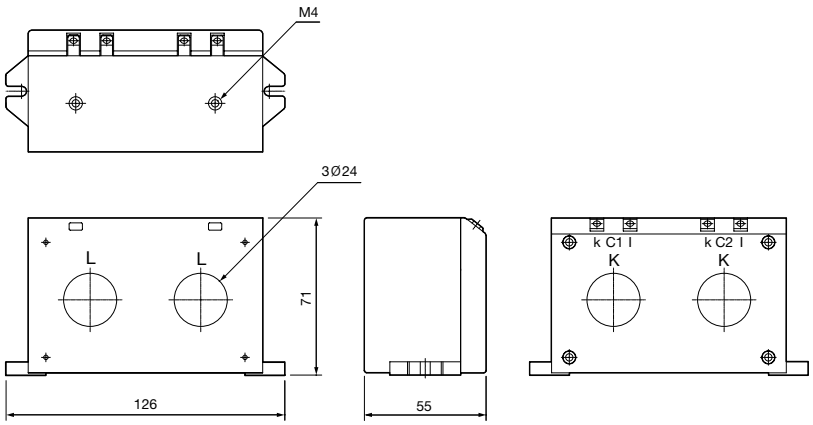

■ **3CT**

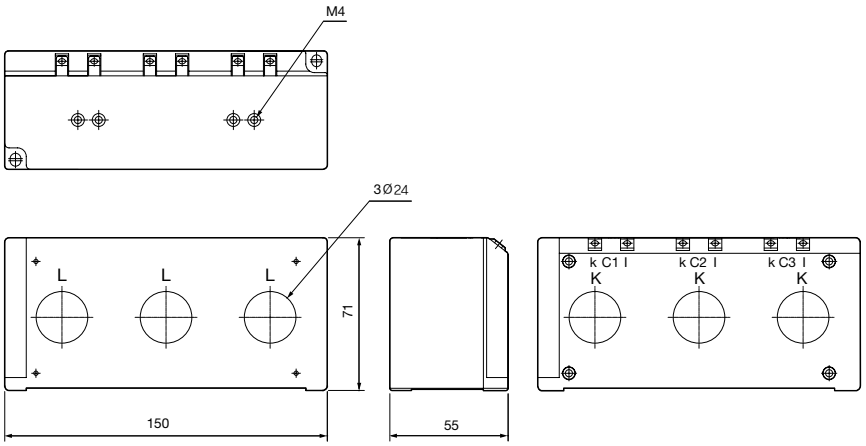

CT (new model)

Current Transformer for EOCR Combination

Ordering Specifications

Reference		CT Current Transformer Ratio	Notes
2CT-	D1-100-C	100:5	Rectangular CT
	DH-150-C	150:5	Rectangular CT
	D2-200-C	200:5	Rectangular CT
	D3-300-C	300:5	Rectangular CT
	D4-400-C	400:5	Rectangular CT
3CT-	H1-100-C	100:5	Rectangular CT
	HH-150-C	150:5	Rectangular CT
	H2-200-C	200:5	Rectangular CT
	H3-300-C	300:5	Rectangular CT
	H4-400-C	400:5	Rectangular CT

How to Order

To order a 2CT:

2 C T – D 1 – 1 0 0 – C

❶

❶	**CT Current Transformer Ratio**	D1	100-C	Rectangular 2CT 100:5
		DH	150-C	Rectangular 2CT 150:5
		D2	200-C	Rectangular 2CT 200:5
		D3	300-C	Rectangular 2CT 300:5
		D4	400-C	Rectangular 2CT 400:5

To order a 3CT:

3 C T – H 1 – 1 0 0 – C

❶

❶	**CT Current Transformer Ratio**	H1	100-C	Rectangular 3CT 100:5
		HH	150-C	Rectangular 3CT 150:5
		H2	200-C	Rectangular 3CT 200:5
		H3	300-C	Rectangular 3CT 300:5
		H4	400-C	Rectangular 3CT 400:5

ZCT

For Zero Phase Current Detection

ZCT-35Ø

ZCT-80Ø

ZCT-120Ø

- **Applies to Earth Fault Protection Relay with Zero Phase Current Detection Method**

Specifications

Model Name		Hole Diameter
ZCT	35	35mm
	80	80mm
	120	120mm
Zero Phase Primary Current		200mA
Zero Phase Secondary Current		1.5mA
Error Tolerance		±5%
Burden		10VA
Rated Voltage		AC600V
Insulation Withstanding Voltage		2kV
Insulation Resistance		10MΩ (DC500V Megger)
Attachment		Panel

Dimensions Diagram

ZCT-∅35

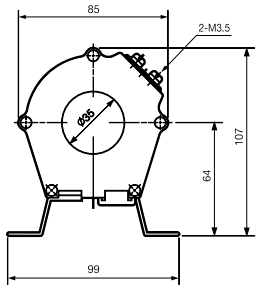

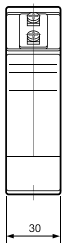

MOUNTING HOLE SIZE

ZCT-∅80

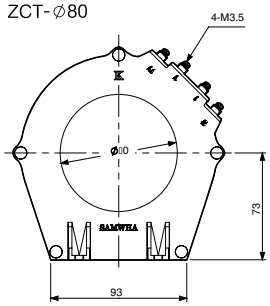

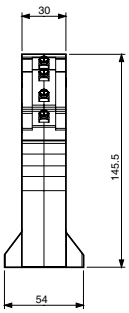

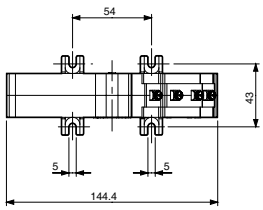

MOUNTING HOLE SIZE

ZCT-∅120

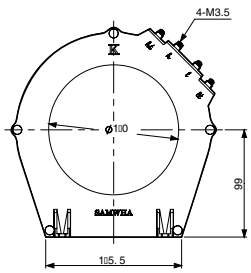

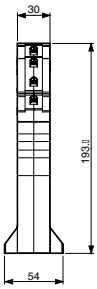

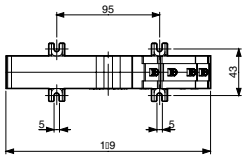

MOUNTING HOLE SIZE

ZCT

For Zero Phase Current Detection

Ordering Specifications

	Reference	Hole Diameter (mm)	Notes
ZCT-	035	35	
	080	80	
	120	120	

How to Order

To order a ZCT:

Z C T – 0 3 5

❶

❶	**Hole Specifications**	035	35m/m
		080	80m/m
		120	120m/m

SR-CT

- Inverse Characteristic Applicable for EOCR Bulk Load Protection
- Over Current Integer: 10
- Specific to Electrical Over Current Relay

Specifications

Current Transformer Ratio	Type	Current Transformer Ratio
	SR-CT-100	100 : 5A
	SR-CT-150	150 : 5A
	SR-CT-200	200 : 5A
	SR-CT-300	300 : 5A
	SR-CT-400	400 : 5A
Error Tolerance (Rating)		±3% (10P 10)
Burden		1.25VA (5VA : Based on Metering Class)
Secondary Current		5A
Insulation Voltage		AC600V
Insulation Withstanding Voltage		3kV
Insulation Resistance		10MΩ (DC500V Megger)
Attachment		35mm DIN Rail / Panel

※ Error Tolerance (rating) IEC44-6 •10P - for protective relay, error factor ±3% •10 - over current integer

Dimensions Diagram

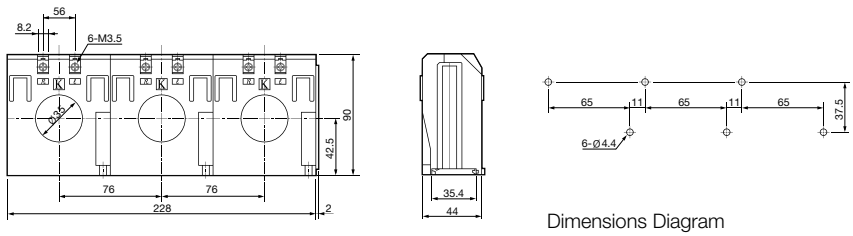

Dimensions Diagram

Ordering Specifications

CT			
Model	Reference	Ratio	Notes
SR-1CT-	100	100:05:00	
	150	150:05:00	
	200	200:05:00	
	300	300:05:00	
	400	400:05:00	
SR-2CT-	100	100:05:00	
	150	150:05:00	
	200	200:05:00	
	300	300:05:00	
	400	400:05:00	
SR-3CT-	100	100:05:00	
	150	150:05:00	
	200	200:05:00	
	300	300:05:00	
	400	400:05:00	

How to Order

To order an SR-CT:

S R – 3 C T – 1 0 0

❶

❶	CT Current Transformer Ratio	S1	100	100:05:00
		SH	150	150:05:00
		S2	200	200:05:00
		S3	300	300:05:00
		S4	400	400:05:00

Make the most of your energy℠

Energy University™ by Schneider Electric

www.MyEnergyUniversity.co.kr 사이트에 키코드 43633y를 등록하시면 에너지 효율 향상 교육을 무료로 수강하실 수 있습니다. 지금 방문하시고 에너지 효율 챔피언이 되십시오!

Schneider Electric Korea Ltd.

슈나이더 일렉트릭 코리아(주)

고객센터 : 1588-2630
웹사이트 : www.schneider-electric.co.kr
카 페 : www.energyforum.co.kr

트위터 : twitter.com/SchneiderKorea
블로그 : www.sch-log.com
페이스북 : www.facebook.com/SchneiderElectric

모바일웹

페이스북

서울 본사	부산 지사	대구 지사	광주 지사	천안 지사
서울 마포구 성암로 189 중소기업 DMC타워	부산시 사상구 괘법동 559-13	대구 북구 산격2동 1666 전기조명관 동훈빌딩 5층	광주 광덕구 장산동 992-9 B동 101호 크리스탈빌딩 401호	충남 천안시 서북구 불당동 724 오피스텔 A동 836호
Tel. 02 2630 9700	Tel. 051 319 7901	Tel. 053 384 8820	Tel. 062 971 2152	Tel. 041 552 0501
Fax 02 2630 9800~1	Fax 051 319 7900	Fax 053 384 8821	Fax 062 971 2153	Fax 041 552 0599

2015.08